LEARNE2I / GUESS PAPERS

JEE Main 2026 Session 2

Physics
Solutions companion

300 questions / NCERT chapter navigation
Answers and available source solutions, in paper order.

Use the question numbers from the companion question paper. Brief source answers are identified wherever a detailed solution is unavailable.

Solutions on your phone

Scan to choose a chapter or question. You can also download all three solutions PDFs together.

learne2i.com/guess-paper/solutions/2026-session-2/

Open the PDF bookmarks panel on the left to jump between chapters. The chapter links in the guide are clickable too.

YOUR PRACTICE ROADMAP

Chapter & topic priorities

For this Session 2 collection, begin with **Current Electricity; Ray Optics and Optical Instruments; System of Particles and Rotational Motion**. These chapters have the largest share of the selected questions.

Practice weight = questions selected from a chapter / 300. Topic percentages use that chapter's question count. These are practice priorities from the prediction output, not guaranteed exam marks or probabilities.

NCERT chapter / leading topics	Priority	Questions	Weight
Units and Measurements Dimensional analysis: 1 (25.0%) / Dimensional formulae of magnetic quantities: 1 (25.0%) / Dimensional formulae of physical quantities: 1 (25.0%) / More topics in chapter guide	Consolidate	1-4 (4)	1.3%
Motion in a Straight Line Kinematics: 8 (47.1%) / Equations of motion: 7 (41.2%) / & 03 Kinematics: 1 (5.9%) / More topics in chapter guide	Focus first	5-21 (17)	5.7%
Motion in a Plane Projectile motion: 3 (75.0%) / Equations of motion: 1 (25.0%)	Consolidate	22-25 (4)	1.3%
Laws of Motion Newtonian mechanics: 5 (41.7%) / Force balance using Newton's laws: 3 (25.0%) / Friction: 2 (16.7%) / More topics in chapter guide	Focus first	26-37 (12)	4.0%
Work, Energy and Power Work and energy: 10 (52.6%) / Work-energy theorem: 7 (36.8%) / Power on inclined plane: 1 (5.3%) / More topics in chapter guide	Focus first	38-56 (19)	6.3%
System of Particles and Rotational Motion Momentum and rotation: 5 (22.7%) / Rotational dynamics: 4 (18.2%) / Torque and angular-momentum relations: 3 (13.6%) / More topics in chapter guide	Focus first	57-78 (22)	7.3%
Gravitation Gravitational potential energy: 1 (100.0%)	Consolidate	79-79 (1)	0.3%
Mechanical Properties of Solids Elasticity: 8 (72.7%) / Longitudinal strain: 1 (9.1%) / Stress-strain relation in a solid: 1 (9.1%) / More topics in chapter guide	Focus first	80-90 (11)	3.7%
Mechanical Properties of Fluids Fluid mechanics: 1 (50.0%) / Viscosity: 1 (50.0%)	Consolidate	91-92 (2)	0.7%
Thermal Properties of Matter Calorimetry: 2 (33.3%) / Heat transfer: 2 (33.3%) / Thermal properties: 2 (33.3%)	Next	93-98 (6)	2.0%

NCERT chapter / leading topics	Priority	Questions	Weight
Thermodynamics Thermodynamic processes: 8 (61.5%) / First law of thermodynamics: 5 (38.5%)	Focus first	99-111 (13)	4.3%
Kinetic Theory Kinetic molecular theory: 3 (50.0%) / Degrees of freedom and equipartition: 1 (16.7%) / Ideal gas law: 1 (16.7%) / More topics in chapter guide	Next	112-117 (6)	2.0%
Oscillations Simple harmonic motion: 3 (37.5%) / Oscillatory motion: 2 (25.0%) / Oscillations: 1 (12.5%) / More topics in chapter guide	Next	118-125 (8)	2.7%
Waves Wave motion: 8 (100.0%)	Next	126-133 (8)	2.7%
Electric Charges and Fields Electric fields and forces: 3 (42.9%) / Electric field: 2 (28.6%) / Electric Charges and Fields: 1 (14.3%) / More topics in chapter guide	Next	134-140 (7)	2.3%
Electrostatic Potential and Capacitance Capacitors with dielectrics: 4 (80.0%) / Electric potential and capacitance: 1 (20.0%)	Consolidate	141-145 (5)	1.7%
Current Electricity Electric circuits: 24 (52.2%) / Ohm's law: 9 (19.6%) / Circuit analysis: 4 (8.7%) / More topics in chapter guide	Focus first	146-191 (46)	15.3%
Moving Charges and Magnetism Magnetic force and field: 9 (64.3%) / Biot-Savart law: 2 (14.3%) / Magnetic field due to currents: 2 (14.3%) / More topics in chapter guide	Focus first	192-205 (14)	4.7%
Magnetism and Matter Magnetism and Matter: 1 (100.0%)	Consolidate	206-206 (1)	0.3%
Electromagnetic Induction Inductance and induced emf: 5 (71.4%) / Electromagnetic Induction: 1 (14.3%) / Faraday-Lenz law and induced emf: 1 (14.3%)	Next	207-213 (7)	2.3%
Alternating Current AC circuit analysis: 2 (50.0%) / Alternating voltage and current: 2 (50.0%)	Consolidate	214-217 (4)	1.3%
Electromagnetic Waves Electromagnetic spectrum: 1 (50.0%) / Electromagnetic waves: 1 (50.0%)	Consolidate	218-219 (2)	0.7%
Ray Optics and Optical Instruments Lens formula: 15 (36.6%) / Geometrical optics: 11 (26.8%) / Image formation or refraction using ray optics: 5 (12.2%) / More topics in chapter guide	Focus first	220-260 (41)	13.7%
Wave Optics Young's double-slit interference: 8 (42.1%) / Interference of light: 5 (26.3%) / Image formation or refraction using ray optics: 1 (5.3%) / More topics in chapter guide	Focus first	261-279 (19)	6.3%

NCERT chapter / leading topics	Priority	Questions	Weight
Dual Nature of Radiation and Matter de Broglie wavelength: 2 (25.0%) / de Broglie wavelength of a particle: 1 (12.5%) / de Broglie wavelength of a particle accelerated through a potential difference: 1 (12.5%) / More topics in chapter guide	Next	280-287 (8)	2.7%
Atoms Excitation and ionisation energy: 1 (50.0%) / Hydrogen spectrum: 1 (50.0%)	Consolidate	288-289 (2)	0.7%
Semiconductor Electronics: Materials, Devices and Simple Circuits Logic gates: 4 (57.1%) / Electronic circuits and logic gates: 1 (14.3%) / Semiconductor devices: 1 (14.3%) / More topics in chapter guide	Next	290-296 (7)	2.3%
Communication Systems Historical appendix / omitted source chapter Communication systems: 2 (50.0%) / Amplitude modulation: 1 (25.0%) / Signal propagation and transmission: 1 (25.0%)	Historical appendix	297-300 (4)	1.3%

How to use the priorities

1. Rank chapters by their selected question counts. Ties follow NCERT book order.
2. Focus first: chapters starting within the first 70% of selected, non-historical questions. Next: the following 20%. Consolidate: the remainder. A chapter crossing a threshold stays together.
3. Topic counts use the question's existing core concept, falling back to topic and then chapter. Each question is counted once. Full topic lists begin each chapter.
4. Historical/omitted chapters stay in a separate appendix. Their presence is not a recommendation that they are in the target examination syllabus.

Names follow NCERT Classes XI and XII. Practical chemistry is identified as a laboratory-manual section. Percentages are rounded and may not add to exactly 100.0%. Chapters with no selected questions are not listed; this does not mean they have no exam importance.

Chapter naming references: NCERT textbooks.

Units and Measurements

Questions 1-4 / 4 selected / 1.3% practice weight / Consolidate

Question 1

Match List-I with List-II.

List-I (Number)	List-II (Significant figures)
(a) 1001	(i) 4
(b) 010.1	(ii) 3
(c) 100.100	(iii) 6
(d) 0.0010010	(iv) 5

Choose the correct answer from the options given below:

A. (A)-(III), (B)-(IV), (C)-(II), (D)-(I)

B. (A)-(IV), (B)-(III), (C)-(I), (D)-(II)

C. (A)-(II), (B)-(I), (C)-(IV), (D)-(III)

D. (A)-(I), (B)-(II), (C)-(III), (D)-(IV)

Correct answer: C

Source solution

(a) 1001

All non-zero digits are significant and zeros between non-zero digits are also significant.

1001 has 4 significant figures

$(a) \rightarrow (i)$

\vspace{0.2cm}

(b) 010.1

The leading zero is not significant.

10.1

contains **3** significant figures.

$$(b) \rightarrow (ii)$$

\vspace{0.2cm}

(c) 100.100

Zeros between non-zero digits and trailing zeros to the right of the decimal point are significant.

100.100 has 6 significant figures

$$(c) \rightarrow (iii)$$

\vspace{0.2cm}

(d) 0.0010010

Leading zeros are not significant, while zeros between non-zero digits and the trailing zero after the decimal point are significant.

$\boxed{\text{0.0010010 has 5 significant figures}}$

$$(d) \rightarrow (iv)$$

Therefore,

$$\boxed{(a) \rightarrow (i), \quad (b) \rightarrow (ii), \quad (c) \rightarrow (iii), \quad (d) \rightarrow (iv)}$$

Question 2

Match List-I with List-II.

List-I	List-II
(a) Spring constant	(i) $\left(MT^{-2}\right)$
(b) Angular speed	(ii) $\left(T^{-1}\right)$
(c) Angular momentum	(iii) $\left(ML^2T^{-1}\right)$
(d) Moment of Inertia	(iv) $\left(ML^2\right)$

Choose the correct answer from the options given below:

A. A-II, B-I, C-IV, D-III

B. A-IV, B-I, C-III, D-II

C. A-II, B-III, C-I, D-IV

D. A-I, B-III, C-II, D-IV

Correct answer: A

Source solution

(a) Spring Constant

Using Hooke's law,

$$F = kx$$

$$[k] = \frac{[F]}{[x]} = \frac{MLT^{-2}}{L} = MT^{-2}.$$

$$\boxed{(a) \to (i)}$$

\vspace{0.2cm}

(b) Angular Speed

$$\omega = \frac{\theta}{t}.$$

Since angle is dimensionless,

$$[\omega] = T^{-1}.$$

$$\boxed{(b) \to (ii)}$$

\vspace{0.2cm}

(c) Angular Momentum

$$L = I\omega.$$

$$[L] = (ML^2)(T^{-1}) = ML^2T^{-1}.$$

$$\boxed{(c) \to (iii)}$$

\vspace{0.2cm}

(d) Moment of Inertia

$$I = mr^2.$$

$$[I] = ML^2.$$

$$\boxed{(d) \rightarrow (iv)}$$

Therefore,

$$\boxed{(a) \rightarrow (i), \quad (b) \rightarrow (ii), \quad (c) \rightarrow (iii), \quad (d) \rightarrow (iv)}$$

Question 3

Match List-I with List-II.

	List-I		List-II
A.	Coefficient of viscosity	I.	$[ML^{-1}T^{-2}]$
B.	Surface tension	II.	$[ML^{2}T^{-2}]$
C.	Pressure	III.	$[ML^{0}T^{-2}]$
D.	Surface energy	IV.	$[ML^{-1}T^{-1}]$

Choose the correct answer from the options given below.

A. A-I, B-II, C-IV, D-III

B. A-IV,B-III,C-I,D-II

C. A-I, B-III, C-II, D-IV

D. A-IV, B-I, C-II, D-III

Correct answer: B

Source solution

(A) $\eta = \frac{\text{Fdr}}{\text{Adv}} = \frac{[\text{MLT}^{-2}][\text{L}]}{[\text{L}^2][\text{LT}^{-1}]} = [\text{ML}^{-1}\,\text{T}^{-1}]$

(B) $\text{S} = \frac{\text{F}}{\text{L}} = \frac{[\text{MLT}^{-2}]}{[\text{L}]} = [\text{MT}^{-2}]$

(C) $\text{P} = \frac{\text{F}}{\text{A}} = \frac{[\text{MLT}^{-2}]}{[\text{L}^2]} = [\text{ML}^{-1}\,\text{T}^{-2}]$

(D) $\text{E} = \text{S} \times \text{A} = [\text{MT}^{-2}]\,[\text{L}^2] = [\text{ML}^2\,\text{T}^{-2}]$

SECTION-B

Question 4

Match the List-I with List-II

	List-I		List-II
A.	Magnetic induction	I.	$MLT^{-2}A^{-2}$
B.	Magnetic flux	II.	$ML^2T^{-2}A^{-2}$
C.	Magnetic permeability	III.	$ML^0T^{-2}A^{-1}$
D.	Self inductance	IV.	$ML^2T^{-2}A^{-1}$

Choose the correct answer from the options given below:

A. A-IV,B-III,C-I,D-II

B. A-III,B-IV,C-II,D-I

C. A-I,B-III,C-IV,D-II

D. A-III,B-IV,C-I,D-II

Correct answer: D

Source solution

For magnetic induction B,

$$F = qvB$$

Therefore,

$$[B] = \frac{[F]}{[q][v]}$$

$$[B] = \frac{MLT^{-2}}{(AT)(LT^{-1})} = MT^{-2}A^{-1}$$

Hence,

$$\text{A} \rightarrow \text{III}$$

For magnetic flux,

$$\Phi = BA$$

where A represents area.

Therefore,

$[\Phi] = [B][A]$

$[\Phi] = \left(MT^{-2}A^{-1}\right)L^2$

$[\Phi] = ML^2T^{-2}A^{-1}$

Hence,

$\mathbf{B \rightarrow IV}$

For magnetic permeability,

$B = \mu H$

Therefore,

$[\mu] = \frac{[B]}{[H]}$

Since,

$[H] = AL^{-1}$

we get,

$[\mu] = \frac{MT^{-2}A^{-1}}{AL^{-1}}$

$[\mu] = MLT^{-2}A^{-2}$

Hence,

$\mathbf{C \rightarrow I}$

For self inductance,

$\Phi = LI$

Therefore,

$$[L] = \frac{[\Phi]}{[I]}$$

$$[L] = \frac{ML^2T^{-2}A^{-1}}{A}$$

$$[L] = ML^2T^{-2}A^{-2}$$

Hence,

$$\mathbf{D \rightarrow II}$$

Thus, the correct matching is

$$\boxed{\mathbf{A\text{-III},\quad B\text{-IV},\quad C\text{-I},\quad D\text{-II}}}$$

Motion in a Straight Line

Questions 5-21 / 17 selected / 5.7% practice weight / Focus first

Question 5

A body is moving with constant speed, in a circle of radius 10 m . The body completes one revolution in 4 s . At the end of 3rd second, the displacement of body (in m) from its starting point is:

A. 15π

B. $10\sqrt{2}$

C. 30

D. 5π

Correct answer: B

Source solution

Angular speed is

$$\omega = \frac{2\pi}{T}$$

Given,

$$T = 4\,\text{s}$$

$$\omega = \frac{2\pi}{4} = \frac{\pi}{2}\,\text{rad s}^{-1}$$

Angular displacement after $t = 3\,\text{s}$:

$$\theta = \omega t$$

$$= \frac{\pi}{2} \times 3$$

$$= \frac{3\pi}{2} \text{ rad}$$

$$\boxed{\theta = \frac{3\pi}{2} \text{ rad}}$$

Question 6

A body of mass 2 kg is initially at rest. It starts moving unidirectionally under the influence of a source of constant power P. Its displacement in 4 s is $\frac{1}{3}\alpha^2\sqrt{P}m$. The value of α will be .

Numerical answer: _____

Enter the requested value (an integer; 0 decimal places). Use the units and scaling stated in the question.

Correct answer: 4

Source solution

$\frac{1}{2}mv^2 = pt$
$\mathrm{V} = \sqrt{\frac{2\mathrm{pt}}{\mathrm{m}}}$
$\frac{\mathrm{dx}}{\mathrm{dt}} = \sqrt{\frac{2\mathrm{pt}}{\mathrm{m}}}$
$\int \mathrm{dx} = \sqrt{\frac{2\mathrm{p}}{\mathrm{m}}} \int \sqrt{\mathrm{t}}\mathrm{dt}$
$\mathrm{x} = \sqrt{\frac{2\mathrm{p}}{\mathrm{m}}} \left[\mathrm{t}^{3/2}\right]_0^4$
$\mathrm{x} = \frac{1}{3} \times 16\sqrt{\mathrm{p}}$
$\propto = 4$
Ans: (4)

Question 7

A particle excutes S.H.M with amplitude 'a' and time period T. The displacement of the particle when its speed is half of maximum speed is $\frac{\sqrt{x}a}{2}$. The value of x is

Numerical answer: _____

Enter the requested value (an integer; 0 decimal places). Use the units and scaling stated in the question.

Correct answer: 3

Source solution

Fora particle excutes S.H.M

$V = \omega\sqrt{a^2 - x^2}$

Given $V = \frac{V_{max}}{2} \Rightarrow \frac{A\omega}{2}$

$\frac{A^2\omega^2}{4} = \omega^2 a^2 - \omega^2 x^2$

$x = \frac{\sqrt{3}}{2}a$

Question 8

A bullet of 10 g , moving with velocity v, collides head-on with the stationary bob of a pendulum and recoils with velocity $100\ \mathrm{m/s}$. The length of the pendulum is 0.5 m and mass of the bob is 1 kg . The minimum value of $v =$ $\mathrm{m/s}$ so that the pendulum describes a circle. (Assume the string to be inextensible and $g = 10\ \mathrm{m/s^2}$)

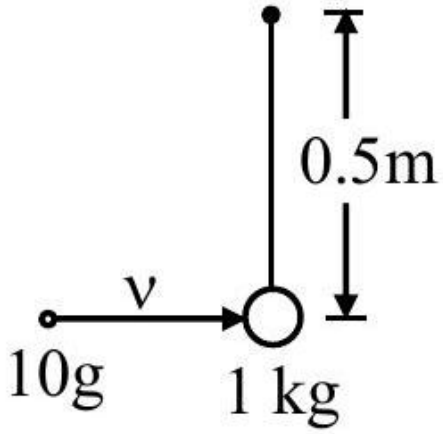

Numerical answer: _____

Enter the requested value (an integer; 0 decimal places). Use the units and scaling stated in the question.

Correct answer: 400

Source solution

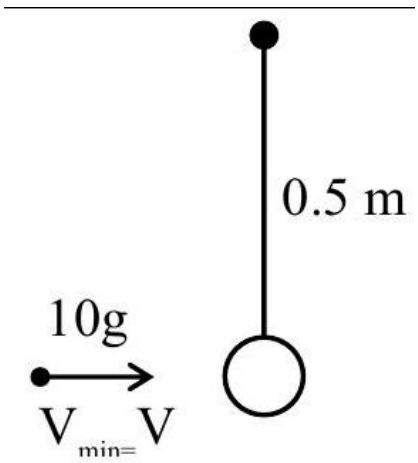

$V' = \sqrt{5gR} = \sqrt{5 \times 10 \times 0.5}$

$V' = 5\ \mathrm{m/s}$

$m_1\ V = m_2 \times 5 - m_1 \times 100$

$\frac{10}{1000} \times \mathrm{V} = 5 - \frac{10}{1000} \times 100$
$\mathrm{V} = 400\ \mathrm{m/s}$

Question 9

A body of mass 8 kg and another of mass 2 kg are moving with equal kinetic energy. The ratio of their respective momenta will be :

A. $1:1$

B. $2:1$

C. $1:4$

D. $4:1$

Correct answer: B

Source solution

The kinetic energy of a particle in terms of momentum is

$$K = \frac{p^2}{2m}$$

For the first particle,

$$K_1 = \frac{P_1^2}{2 \times 8}$$

$$K_1 = \frac{P_1^2}{16}$$

For the second particle,

$$K_2 = \frac{P_2^2}{2 \times 2}$$

$$K_2 = \frac{P_2^2}{4}$$

Given,

$$K_1 = K_2$$

$$\frac{P_1^2}{16} = \frac{P_2^2}{4}$$

$$P_1^2 = 4P_2^2$$

$$\frac{P_1}{P_2} = 2$$

Question 10

An object is thrown vertically upwards. At its maximum height, which of the following quantity becomes zero ?

A. Momentum

B. Potential energy

C. Acceleration

D. Force

Correct answer: A

Source solution

Sol. At maximum height, $\mathbf{V} = \mathbf{0} \therefore$ the momentum of the object is zero.

Question 11

A ball of mass 0.5 kg is dropped from the height of 10 m . The height, at which the magnitude of velocity becomes equal to the magnitude of acceleration due to gravity, is m. (Use $g = 10\ m/s^2$).

Numerical answer: _____

Enter the requested value (an integer; 0 decimal places). Use the units and scaling stated in the question.

Correct answer: 5

Source solution

$v^2 = u^2 + 2as$
$100 = 0 + 2(10)s$
$S = 5\ m$
Height from ground $= 10 - 5 = 5\ m$

Question 12

A pendulum is suspended by a string of length 250 cm . The mass of the bob of the pendulum is 200 g . The bob is pulled aside until the string is at 60° with vertical as shown in the figure. After releasing the bob. the maximum velocity attained by the bob will be ms^{-1}.
(if $\mathrm{g} = 10\ \mathrm{m/s^2}$)

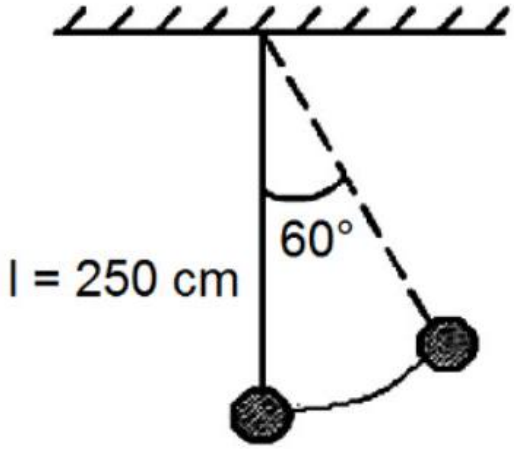

Numerical answer: _____

Enter the requested value (an integer; 0 decimal places). Use the units and scaling stated in the question.

Correct answer: 5

Source solution

$\mathrm{V_{max}} = \sqrt{2gh}$

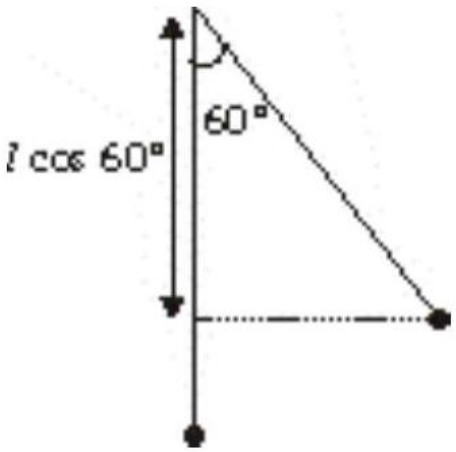

The speed will be highest at the lowest position.

$\mathrm{h} = (\ell - \ell\cos 60^\circ) = \frac{\ell}{2}$
$\mathrm{V_{max}} = \sqrt{2 \times \mathrm{g} \times \frac{\ell}{2}} = \sqrt{10 \times 2.5} = 5\ \mathrm{m/s}$

Question 13

A stone tide to a string of length L is whirled in a vertical circle with the other end of the string at the centre. At a certain instant of time, the stone is at its lowest position and has a speed u. The magnitude of change in its velocity, as it reaches a position where the string is horizontal, is $\sqrt{x\left(u^2 - gL\right)}$. The value of x is

A. 3

B. 2

C. 1

D. 5

Correct answer: B

Source solution

$$v = \sqrt{u^2 - 2gL}$$

$$\Delta v = \sqrt{u^2 + v^2}$$

$$\Delta v = \sqrt{u^2 + v^2 - 2gL}$$

$$\Delta v = \sqrt{2u^2 - 2gL}$$

$$\Delta v = \sqrt{2\left(u^2 - gL\right)} \quad x = 2$$

Question 14

A body is projected from the ground at an angle of 45° with the horizontal. Its velocity after 2 s is $20\ \mathrm{ms}^{-1}$. The maximum height reached by the body during its motion is m . (use $g = 10\ \mathrm{ms}^{-2}$)

Numerical answer: _____

Enter the requested value (an integer; 0 decimal places). Use the units and scaling stated in the question.

Correct answer: 20

Source solution

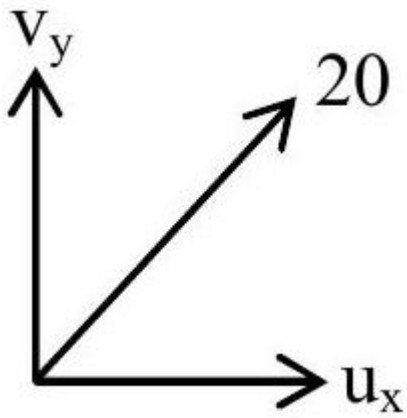

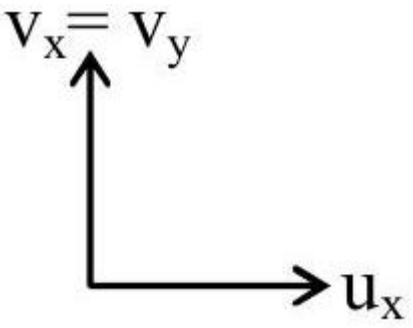

$$v_y = v_x - 20$$
$$\sqrt{(u_x - 20)^2 + u_x^2} = 20$$
$$\Rightarrow 2u_x^2 - 40u_x = 0$$
$$\therefore u_x = 20$$

Question 15

From the top of a tower, a ball is thrown vertically upward which reaches the ground in 6 s . A second ball thrown vertically downward from the same position with the same speed reaches the ground in 1.5 s . A third ball released, from the rest from the same location, will reach the ground in s.

Numerical answer: _____

Enter the requested value (an integer; 0 decimal places). Use the units and scaling stated in the question.

Correct answer: 3

Source solution

Let height of tower be h and speed of projection in first two cases be u.

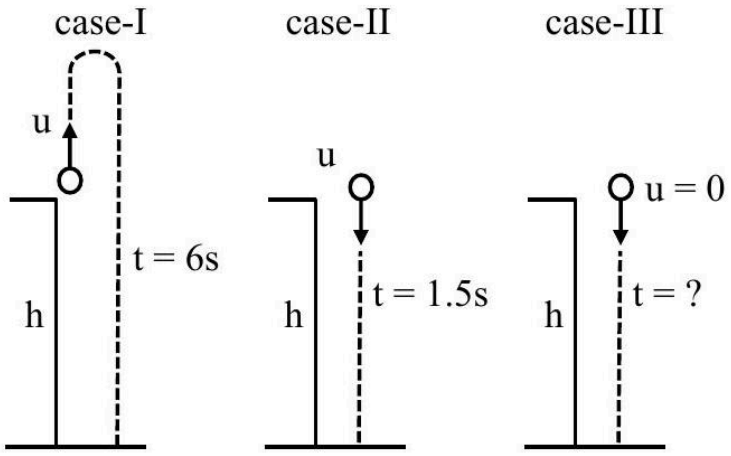

For case-I : 2nd equation $s = ut + \frac{1}{2}at^2$

$h = -u(6) + \frac{1}{2}\, g(6)^2$

$$H = -6u + 18g \quad \text{(i)}$$

For case-II : $h = u(1.5) + \frac{1}{2}\, g(1.5)^2$

$$h = 1.5u + \frac{2.25\, g}{2} \quad \text{(ii)}$$

Multiplying equation (ii) by 4 we get

$$4\,h = 6u + 4.5\,g \qquad \text{(iii)}$$

equation (i) + equation (iii) we get $5\,h = 22.5\,g$

$$h = 4.5\,g \qquad \text{(iv)}$$

For case-III :

$$h = 0 + \frac{1}{2}gt^2 \qquad (\ldots)$$

Using equation (4) & equation (5)
$4.5\,g = \frac{1}{2}gt^2$
$t^2 = 9 \Rightarrow t = 3\,s$

Question 16

A small toy starts moving from the position of rest under a constant acceleration. If it travels a distance of 10 m in t s ,. the distance travelled by the toy in the next t s will be :

A. 10 m

B. 20 m

C. 30 m

D. 40 m

Correct answer: C

Source solution

Sol. $\mathbf{u = 0}$, Say acceleration is $\boldsymbol{a}$. For $\boldsymbol{t}$ s,

$$10 = \frac{1}{2}at^2$$

For $\boldsymbol{2t}$ s,

$$10 + x = \frac{1}{2}a(2t)^2$$

$$\frac{10 + x}{10} = \frac{4}{1}$$
$$x = 30\,\mathrm{m}$$

Question 17

Two balls A and B are placed at the top of 180 m tall tower. Ball A is released from the top at $\mathbf{t = 0}$ s. Ball B is thrown vertically down with an initial velocity ' u ' at $t = 2$ s. After a certain time, both balls meet 100 m above the ground. Find the value of ' u ' in $\mathbf{ms^{-1}}$. [use $\mathbf{g = 10\ ms^{-2}}$] :

A. 10

B. 15

C. 20

D. 30

Correct answer: D

Source solution

Sol. Let them meet at time t.

$$t = \sqrt{\frac{2h}{g}} = \sqrt{\frac{2 \times 80}{10}} = 4\,\text{sec}$$

Time taken by ball B to meet A is $2\,\text{sec}$ using

$$S = ut + \frac{1}{2}at^2$$

$$-80 = -u \cdot 2 + \frac{1}{2}(-10)(2)^2$$

$$u = 30$$

Question 18

A boy thrown a ball into air at 45° from the horizontal to land it on a roof of a building of height H . If the ball attains maximum height in 2 s and lands on the building in 3 s after launch, then value of H is

_____

m.

$$(g = 10\ m/s^2)$$

A. 20

B. 10

C. 25

D. 15

Correct answer: D

Source solution

$T = \frac{2u_y}{g} = 4$

$$\Rightarrow u_y = \frac{40}{2} = 20\ m/s$$

$$y = u_y \Delta t - \frac{1}{2} g(\Delta t)^2$$

$$\Rightarrow H = 20 \times 3 - 5 \times 9$$

$$= 60 - 45$$

$$= 15\ m$$

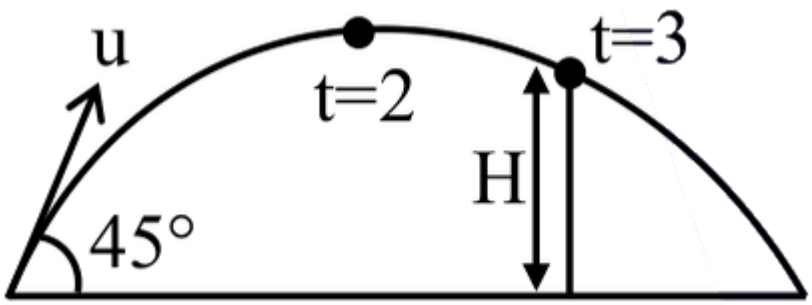

Question 19

A body is performing simple harmonic with an amplitude of 10 cm . The velocity of the body was tripled by air Jet when it is at 5 cm from its mean position. The new amplitude of vibration is $\sqrt{\mathbf{x}}$ cm . The value of x is .

Numerical answer: _____

Enter the requested value (an integer; 0 decimal places). Use the units and scaling stated in the question.

Correct answer: 700

Source solution

$\mathbf{A = 10\ cm}$

$\therefore$ Total Energy $= \frac{1}{2}\mathbf{KA^2}$

By energy conservation we can final v at $\mathbf{x = 5}$

$\frac{1}{2}K(10)^2 = \frac{1}{2}K(5)^2 + \frac{1}{2}mv^2$

$\mathbf{V = \sqrt{\frac{75\ K}{m}}}$

Now, velocity is tripled through external mean so the amplitude of SHM will charge and so the total energy, (but potential) energy at this moment will remain same)

$\therefore \frac{1}{2}\ \mathbf{K(5)^2} + \frac{1}{2}\ \mathbf{m}\left(3\sqrt{\frac{75\ K}{m}}\right)^2 = \frac{1}{2}\mathbf{KA^2}$

$\Rightarrow \mathbf{25\ K + 675\ K = KA^2}$

$\therefore \mathbf{A = \sqrt{700}}$

$\therefore \mathbf{x = 700}$

Question 20

A ball is thrown vertically upward with an initial velocity of $150\ \mathrm{m/s}$. The ratio of velocity after 3 s and 5 s is $\frac{x+1}{x}$. The value of x is ..... .Take ($\mathrm{g = 10\ m/s^2}$).

A. 6

B. 5

C. -5

D. 10

Correct answer: B

Source solution

Sol.

$$\vec{v} = \vec{u} + \vec{a}t$$

$$\mathrm{V} = 150 - 10t$$

$$\mathrm{V}(3) = 150 - 30 = 120$$

$$\mathrm{V}(5) = 150 - 50 = 100$$

$$\frac{120}{100} = \frac{x+1}{x} = \frac{6}{5} \Rightarrow x = 5$$

Question 21

The distance between two consecutive points with phase difference of 60° in a wave of frequency 500 Hz is 6.0 m . The velocity with which wave is traveling is km/s

Numerical answer: _____

Enter the requested value (an integer; 0 decimal places). Use the units and scaling stated in the question.

Correct answer: 18

Source solution

18

$\Delta\phi = \frac{2\pi}{\lambda}\Delta x$

$\Rightarrow \frac{\pi}{3} = \frac{2\pi}{\lambda} \times 6$

$\Rightarrow \lambda = 36\ \text{m}$

Now $v = f\lambda = 500 \times 36\ \text{m/s} = 18000\ \text{m/s} = 18\ \text{km/s}$

Motion in a Plane

Questions 22-25 / 4 selected / 1.3% practice weight / Consolidate

Question 22

A body is projected at $t = 0$ with a velocity $10\ ms^{-1}$ at an angle of $60°$ with the horizontal. The radius of curvature of its trajectory at $t = 1\ s$ is R . Neglecting air resistance and taking acceleration due to gravity $g = 10\ ms^{-2}$, the value of R is :

A. 2.5 m

B. 10.3 m

C. 2.8 m

D. 5.1 m

Correct answer: C

Source solution

Sol.

Initial velocity components:

$$v_x = 10\cos 60° = 5\ \mathrm{m\ s^{-1}}$$

$$v_y = 10\sin 60° = 5\sqrt{3}\ \mathrm{m\ s^{-1}}$$

After $t = 1\ \mathrm{s}$,

$$v_x = 5\ \mathrm{m\ s^{-1}}$$

$$v_y = 5\sqrt{3} - 10$$

$$|v_y| = 10 - 5\sqrt{3}$$

Hence,

$$v^2 = v_x^2 + v_y^2$$

$$= 25 + (10 - 5\sqrt{3})^2$$

$$= 25 + 100 + 75 - 100\sqrt{3}$$

$$= 200 - 100\sqrt{3}$$

Let θ be the angle made by the velocity with the horizontal.

$$\tan\theta = \frac{10 - 5\sqrt{3}}{5} = 2 - \sqrt{3}$$

$$\theta = 15^\circ$$

Normal acceleration:

$$a_n = g\cos\theta$$

$$= 10\cos 15^\circ$$

Using

$$a_n = \frac{v^2}{R}$$

$$R = \frac{v^2}{a_n} = \frac{200 - 100\sqrt{3}}{10\cos 15^\circ}$$

$$= \frac{100(2 - \sqrt{3})}{10\cos 15^\circ}$$

$$\boxed{R \approx 2.8\,\text{m}}$$

Question 23

A projectile is launched at an angle ' α ' with the horizontal with a velocity $20\ \mathrm{ms}^{-1}$. After 10 s , its inclination with horizontal is ' β '. The value of $\tan\beta$ will be : $\left(\mathrm{g}=10\ \mathrm{ms}^{-2}\right)$

A. $\tan\alpha+5\sec\alpha$

B. $\tan\alpha-5\sec\alpha$

C. $2\tan\alpha-5\sec\alpha$

D. $2\tan\alpha+5\sec\alpha$

Correct answer: B

Source solution

The horizontal component of velocity remains constant:

$$v_x = u_x = 20\cos\alpha$$

The vertical component after $t = 10\,\mathrm{s}$ is

$$v_y = u_y - gt$$

$$= 20\sin\alpha - 10\times 10$$

$$= 20\sin\alpha - 100$$

If the velocity makes an angle β with the horizontal, then

$$\tan\beta = \frac{v_y}{v_x}$$

$$= \frac{20\sin\alpha - 100}{20\cos\alpha}$$

$$= \frac{20\sin\alpha}{20\cos\alpha} - \frac{100}{20\cos\alpha}$$

$$= \tan\alpha - 5\sec\alpha$$

Hence,

$$\boxed{\tan\beta = \tan\alpha - 5\sec\alpha}$$

Question 24

A projectile is projected at 30° from horizontal with initial velocity $40\ \mathrm{ms}^{-1}$. The velocity of the projectile at $\mathrm{t} = 2\ \mathrm{s}$ from the start will be:(Given $\mathrm{g} = 10\ \mathrm{m/s}^2$)

A. $20\sqrt{3}\ \mathrm{ms}^{-1}$

B. $40\sqrt{3}\ \mathrm{ms}^{-1}$

C. $20\ \mathrm{ms}^{-1}$

D. Zero

Correct answer: A

Source solution

Sol.

Time to reach maximum height:

$$t_{\max} = \frac{u \sin\theta}{g}$$

$$= \frac{40 \sin 30^\circ}{10} = 2\,\mathrm{s}$$

Hence, at

$$t = 2\,\mathrm{s},$$

the particle is at the highest point of its trajectory.

At maximum height,

$$v_y = 0$$

and only the horizontal component remains:

$$v = v_x = u\cos\theta$$

$$= 40\cos 30^\circ$$

$$= 40 \cdot \frac{\sqrt{3}}{2}$$

$$= 20\sqrt{3}\,\mathrm{m\ s^{-1}}$$

Question 25

A block of mass M slides down on a rough inclined plane with constant velocity. The angle made by the incline plane with horizontal is θ. The magnitude of the contact force will be :

A. Mg

B. $\mathrm{Mg}\cos\theta$

C. $\sqrt{\mathrm{Mg}\sin\theta + \mathrm{Mg}\cos\theta}$

D. $\mathrm{Mg}\sin\theta\sqrt{1+\mu}$

Correct answer: A

Source solution

Sol.

Since the block slides with constant velocity,

$$a = 0$$

Hence, the net force along the incline is zero.

$$mg\sin\theta = f$$

where f is the frictional force.

The normal reaction is

$$N = mg\cos\theta$$

The contact force is the resultant of the normal reaction and friction:

$$F_c = \sqrt{N^2 + f^2}$$

$$= \sqrt{(mg\cos\theta)^2 + (mg\sin\theta)^2}$$

$$= mg\sqrt{\cos^2\theta + \sin^2\theta}$$

$$= mg$$

$$\boxed{F_c = mg}$$

Laws of Motion

Questions 26-37 / 12 selected / 4.0% practice weight / Focus first

Question 26

Figures (a), (b), (c) and (d) show variation of force with time.The impulse is highest in figure.

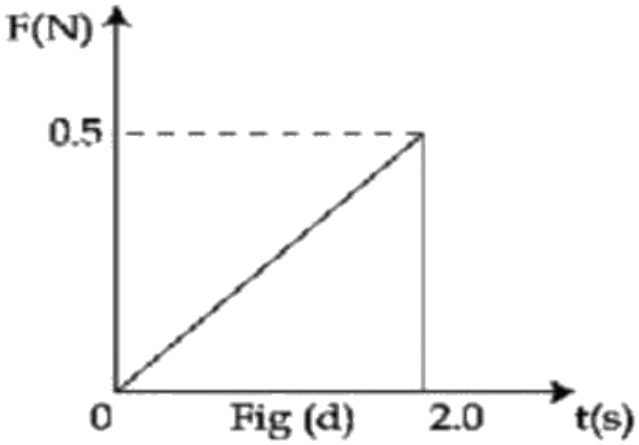

A. Fig (c)

B. Fig (b)

C. Fig (d)

D. Fig (a)

Correct answer: B

Source solution

Sol. (2) As we know that impulse is given by

$$I = \Delta \mathrm{P} = \mathrm{F} \cdot \Delta t$$

or

$$I = \text{Area of f-t graph}$$

For fig (a):

$$I = \frac{1}{2} \cdot \text{base} \cdot \text{height} = \frac{1}{2} \cdot 0.5 \cdot 1 = 0.25\,\text{N} \cdot \text{s}$$

For fig (b):

$$I = \text{length} \cdot \text{width} = 2 \cdot 0.5 = 1\,\text{N} \cdot \text{s}$$

For fig (c):

$$I = \frac{1}{2} \cdot \text{base} \cdot \text{height} = \frac{1}{2} \cdot 1 \cdot 0.75 = 0.375\,\text{N} \cdot \text{s}$$

For fig (d):

$$I = \frac{1}{2} \cdot \text{base} \cdot \text{height} = \frac{1}{2} \cdot 2 \cdot 0.5 = 0.5\,\text{N} \cdot \text{s}$$

Impulse is highest for that figure whose area under F-t is maximum, i.e., figure (b). Option (2) is correct.

Question 27

In the given arrangement of a doubly inclined plane two blocks of masses M and m are placed. The blocks are connected by a light string passing over an ideal pulley as shown. The coefficient of friction between the surface of the plane and the blocks is 0.25 . The value of m , for which $\mathbf{M = 10}$ kg will move down with an acceleration of $\mathbf{2\ m/s^2}$, is : (take $\mathbf{g = 10\ m/s^2}$ and $\mathbf{\tan 37^\circ = 3/4}$)

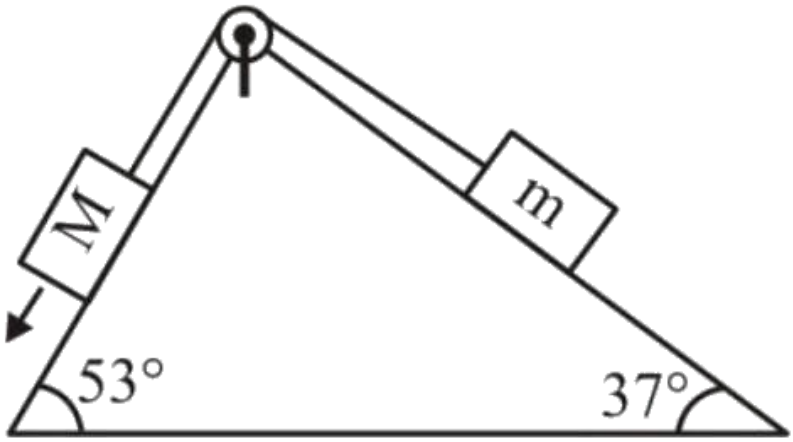

A. 9 kg

B. 4.5 kg

C. 6.5 kg

D. 2.25 kg

Correct answer: B

Source solution

$$\text{For } M \text{ block: } 10\,\text{g} \cdot \sin 53^\circ - \mu(10\,\text{g}) \cdot \cos 53^\circ - T = 10 \cdot 2$$

$$T = 80 - 15 - 20$$

$$T = 45\,\text{N}$$

$$\text{For } m \text{ block: } T - mg \cdot \sin 37^\circ - \mu mg \cdot \cos 37^\circ = m \cdot 2$$

$$45 = 10\,m$$

$$m = 4.5\,\text{kg}$$

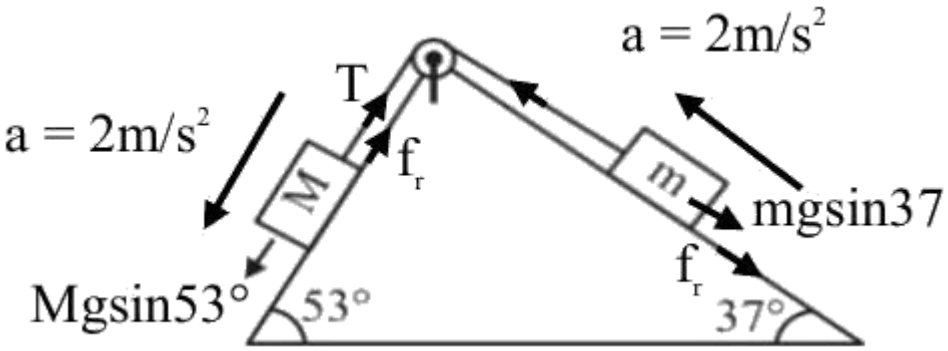

Question 28

A mass of 10 kg is suspended vertically by a rope of length 5 m from the roof. A force of 30 N is applied at the middle point of rope in horizontal direction. The angle made by upper half of the rope with vertical is $\theta = \tan^{-1}\left(x \times 10^{-1}\right)$. The value of x is .
(Given $g = 10\ m/s^2$)

Numerical answer: _____

Enter the requested value (an integer; 0 decimal places). Use the units and scaling stated in the question.

Correct answer: 3

Source solution

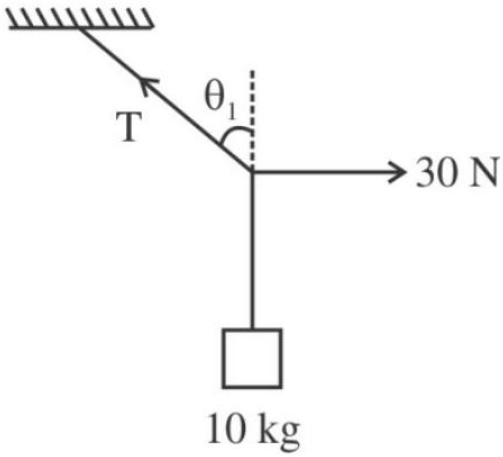

$T\sin\theta = 30$
$T\cos\theta = 100$
$\Rightarrow \quad \tan\theta = 0.3$

Question 29

A cricket ball of mass 0.15 kg is thrown vertically up by a bowling machine so that it rises to a maximum height of 20 m after leaving the machine. If the part pushing the ball applies a constant force F on the ball and moves horizotally a distance of 0.2 m while launching the ball, the value of F (in N) is ($\mathbf{g = 10\ ms^{-2}}$) .

Numerical answer: _____

Enter the requested value (an integer; 0 decimal places). Use the units and scaling stated in the question.

Correct answer: 150

Source solution

150

$\mathbf{m = 0.15\ kg}$

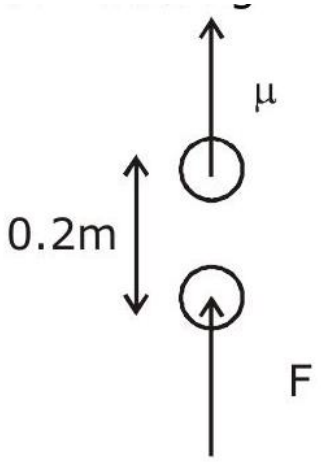

$$\mu = \sqrt{2gh}$$
$$\mu = \sqrt{2 \times 10 \times 20}$$
$$\mu = 20\ \mathrm{m/sec}$$

$$\mathbf{Fd = \frac{1}{2}mv^2}$$
$$F \times 0.2 = \frac{1}{2} \times \frac{0.15}{100} \times 400$$
$$F = \frac{15 \times 200 \times 10}{100 \times 0.2} = 150$$

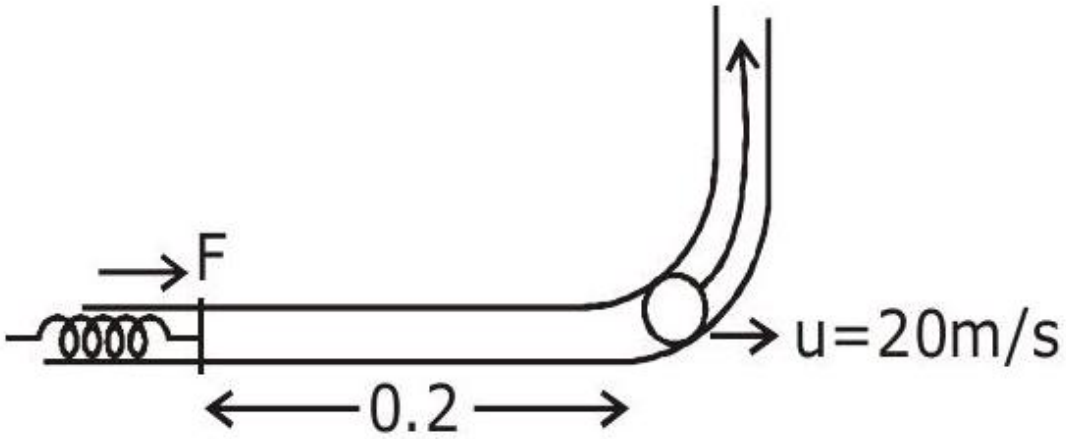
F
u=20m/s
0.2

Question 30

A flexible chain of mass m hangs between two fixed points at the same level. The inclination of the chain with the horizontal at the two points of support is 30°. Considering the equilibrium of each half of the chain, the tension of the chain at the lowest point is

_____

.

A. $\frac{\sqrt{3}}{2}mg$

B. $\frac{1}{2}mg$

C. mg

D. $\sqrt{3}mg$

Correct answer: A

Source solution

$$\mathrm{T}\sin 30^\circ = \frac{\mathrm{m}}{2}\,\mathrm{g}$$
$$\mathrm{T}\cos 30^\circ = \mathrm{T_0}$$
$$\tan 30^\circ = \frac{\mathrm{mg}}{2\,\mathrm{T_0}}$$
$$\mathrm{T_0} = \frac{\sqrt{3}}{2}\mathrm{mg}$$

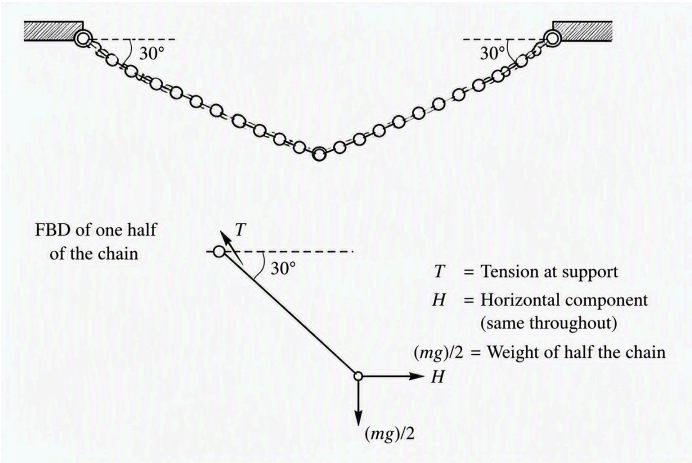

Question 31

A small block of mass m slides down from the top of a frictionless inclined surface, while the inclined plane is moving towards left with constant acceleration $\mathbf{a_0}$. The angle between the inclined plane and ground is θ and its base length is L. Assuming that initially the small block is at the top of the inclined plane, the time it takes to reach the lowest point of the inclined plane is _____.

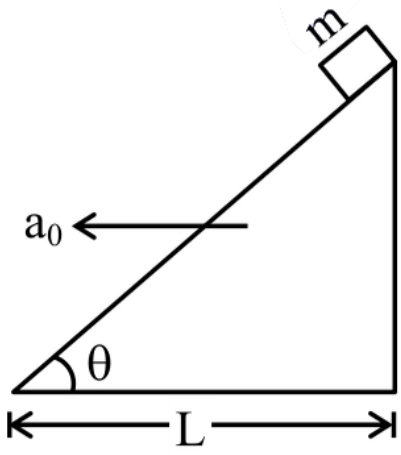

A. $\sqrt{\frac{2\,L}{g\sin 2\theta - a_0(1+\cos 2\theta)}}$

B. $\sqrt{\frac{4\,L}{g\sin 2\theta - a_0(1+\cos 2\theta)}}$

C. $\sqrt{\frac{4\,L}{g\cos^2\theta - a_0\sin\theta\cos\theta}}$

D. $\sqrt{\frac{2\,L}{g\sin\theta - a_0\cos\theta}}$

Correct answer: B

Source solution

$$mg\sin\theta - ma_0\cos\theta = ma$$
$$a = g\sin\theta - a_0\cos\theta$$

Now using,

$$S = ut + \frac{1}{2}a_{\text{down}}\,t^2$$

$$\frac{L}{\cos\theta} = \frac{1}{2}(g\sin\theta - a_0\cos\theta)t^2$$

$$t = \sqrt{\frac{2L}{g\sin\theta\cos\theta - a_0\cos^2\theta}}$$

$$t = \sqrt{\frac{4L}{g\sin 2\theta - a_0(1+\cos 2\theta)}}$$

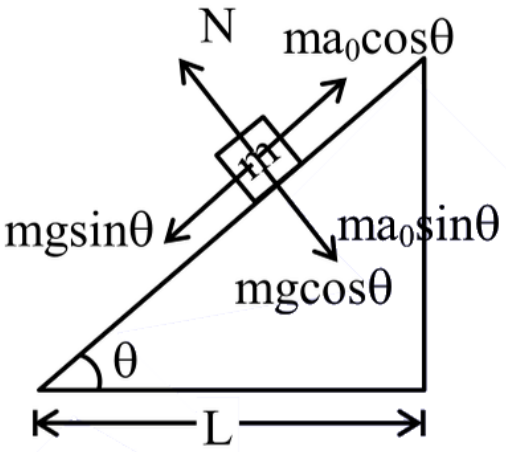

Question 32

A rectangular block of mass 5 kg attached to a horizontal spiral spring executes simple harmonic motion of amplitude 1 m and time period 3.14 s . The maximum force exerted by spring on block is N.

Numerical answer: _____

Enter the requested value (an integer; 0 decimal places). Use the units and scaling stated in the question.

Correct answer: 20

Source solution

$$\therefore \mathrm{T}=3.14=\pi$$

$$\begin{aligned}
\mathrm{T}=\pi=\frac{2\pi}{\omega} &\Rightarrow \omega=2 \\
\mathrm{F_{max}} &= \mathrm{ma_{max}} \\
&= \mathrm{m}\left(\mathrm{A}\omega^2\right) \\
&= \mathrm{mA}(2)^2 \\
&= 5\times 1\times 4 \\
&= 20\ \mathrm{N}
\end{aligned}$$

Question 33

A bullet of mass 0.1 kg moving horizontally with speed $400\ \mathrm{ms}^{-1}$ hits a wooden block of mass 3.9 kg kept on a horizontal rough surface. The bullet gets embedded into the block and moves 20 m before coming to rest. The coefficient of friction between the block and the surface is ..... .(Given $\mathrm{g} = 10\ \mathrm{ms}^{2}$)

A. 0.50

B. 0.90

C. 0.65

D. 0.25

Correct answer: D

Source solution

Using conservation of momentum during collision:

$$P_i = P_f$$

$$(0.1)(400) = (0.1 + 3.9)v$$

$$40 = 4v$$

$$v = 10\,\mathrm{m/s}$$

After collision, the system moves with retardation due to friction:

$$a = \frac{\mu mg}{m} = \mu g$$

Using equation of motion:

$$v^2 = u^2 + 2as$$

Final velocity becomes zero after distance $s = 20\,\mathrm{m}$:

$$0 = (10)^2 - 2\mu g \cdot 20$$

$$100 = 40\mu g$$

Taking $g = 10\,\mathrm{m/s^2}$:

$$100 = 40\mu \cdot 10$$

$$100 = 400\mu$$

$$\boxed{\mu = \frac{1}{4}}$$

Question 34

A bullet 10 g leaves the barrel of gun with a velocity of $600\ \mathrm{m/s}$. If the barrel of gun is 50 cm long and mass of gun is 3 kg , then value of impulse supplied to the gun will be :

A. 12 Ns

B. 6 Ns

C. 36 Ns

D. 3 Ns

Correct answer: B

Source solution

$$0 = 3(-v) + 0.01(600 - v)$$

Solving,

$$0 = -3v + 6 - 0.01v$$

$$0 = 6 - 3.01v$$

$$3.01v = 6$$

$$v \approx 2\,\mathrm{m/s}$$

Impulse on the gun is given by change in momentum:

$$\text{Impulse} = mv$$

$$= 3 \times 2$$

$$= 6\,\mathrm{Ns}$$

Question 35

A steel rod has a radius of 20 mm and a length of 2.0 m . A force of 62.8 kN stretches it along its length. Young's modulus of steel is $2.0 \times 10^{11}\ \mathrm{N/m^2}$. The longitudinal strain produced in the wire is $\times 10^{-5}$

Numerical answer: _____

Enter the requested value (an integer; 0 decimal places). Use the units and scaling stated in the question.

Correct answer: 25

Source solution

$$\text{Strain} = \frac{\text{stress}}{Y} = \frac{\frac{62.8\times10^3}{\pi\times(0.02)^2}}{2\times10^{11}}$$
$$= \frac{62.8\times10^3}{3.14\times4\times10^{-4}\times2\times10^{11}}$$
$$= 2.5 \times 10^{-4}$$
$$= 25 \times 10^{-5}$$

Question 36

A wire of density $8 \times 10^3\ \mathrm{kg/m^3}$ is stretched between two clamps 0.5 m apart. The extension developed in the wire is $3.2 \times 10^{-4}\ \mathrm{m}$. If $\mathrm{Y} = 8 \times 10^{10}\,\mathrm{N/m^2}$, the fundamental frequency of vibration in the wire will be Hz.

Numerical answer: _____

Enter the requested value (an integer; 0 decimal places). Use the units and scaling stated in the question.

Correct answer: 80

Source solution

$$f = \frac{1}{2L}\sqrt{\frac{T}{\mu}} = \frac{1}{2L}\sqrt{\frac{YA\Delta L}{\rho AL}}$$
$$\mathrm{f} = 80\ \mathrm{Hz}$$

Question 37

A block of mass 5 kg is moving on an inclined plane which makes an angle of 30° with the horizontal. Friction coefficient between the block and inclined plane surface is $\frac{\sqrt{3}}{2}$. The force to be applied on the block so that the block will move down without acceleration is _____N.

A. 25

B. 12.5

C. 7.5

D. 15

Correct answer: B

Source solution

$$m = 5\ \text{kg}, \qquad \theta = 30^\circ, \qquad \mu = \frac{\sqrt{3}}{2}$$

$$\textbf{The block moves down the incline without acceleration.}$$

$$\therefore \textbf{Net force along the incline} = 0$$

The component of weight along the incline is

$$mg\sin\theta = 5 \times 10 \times \sin 30^\circ = 25\ \text{N}$$

Normal reaction:

$$N = mg\cos\theta = 5 \times 10 \times \cos 30^\circ = 25\sqrt{3}\ \text{N}$$

Since the block is moving downward, friction acts upward.

$$f = \mu N = \frac{\sqrt{3}}{2} \times 25\sqrt{3} = \frac{75}{2}\ \text{N}$$

Let the applied force F act down the incline. For zero acceleration,

$$mg\sin\theta + F = f$$

$$25 + F = \frac{75}{2}$$

$$F = \frac{75}{2} - 25 = \frac{25}{2}$$

$$\boxed{F = 12.5\ \text{N}}$$

Hence, the required force is

$$\boxed{12.5\ \text{N}}$$

Work, Energy and Power

Questions 38-56 / 19 selected / 6.3% practice weight / Focus first

Question 38

A body at rest is moved along a horizontal straight line by a machine delivering a constant power. The distance moved by the body in time 't' is proportional to :

A. $t^{\frac{3}{2}}$

B. $t^{\frac{1}{2}}$

C. $t^{\frac{1}{4}}$

D. $t^{\frac{3}{4}}$

Correct answer: A

Source solution

$P = \text{constant}$

$$\frac{1}{2}mv^2 = Pt$$
$$\Rightarrow v \propto \sqrt{t}$$
$$\frac{dx}{dt} = C\sqrt{t} \quad C = \text{ constant by integration}$$
$$x = C\frac{t^{\frac{1}{2}+1}}{\frac{1}{2}+1}$$

$x \propto t^{3/2}$

Question 39

The amplitude of a particle executing SHM is 3 cm . The displacement at which its kinetic energy will be 25% more than the potential energy is: cm.

Numerical answer: _____

Enter the requested value (an integer; 0 decimal places). Use the units and scaling stated in the question.

Correct answer: 2

Source solution

$\mathbf{K.E = P.E + \frac{25}{100} \times P.E.}$
$\mathbf{K.E = P.E + \frac{1}{4} P.E}$
$\mathbf{K.E = \frac{5}{4} P.E}$
$\frac{1}{2}K\left(A^2 - x^2\right) = \frac{5}{4} \times \frac{1}{2}Kx^2$
$\mathbf{4\left(A^2 - x^2\right) = 5x^2}$
$\mathbf{4A^2 - 4x^2 = 5x^2}$
$\mathbf{9x^2 = 4A^2}$
$\mathbf{x^2 = \frac{4}{9} \times (3)^2}$
$\mathbf{\therefore x = \pm 2}$

Question 40

A spherical body of mass 2 kg starting from rest acquires a kinetic energy of 10000 J at the end of 5th second. The force acted on the body is N.

Numerical answer: _____

Enter the requested value (an integer; 0 decimal places). Use the units and scaling stated in the question.

Correct answer: 40

Source solution

40

Impulse $= \Delta P$

$F\Delta T = P - O \Rightarrow F\Delta T = \sqrt{2mk}$

$F(5) = \sqrt{2 \times 2 \times 10000}$

$F = 40\ N$

Question 41

The bob of a pendulum was released from a horizontal position. The length of the pendulum is 10 m . If it dissipates 10% of its initial energy against air resistance, the speed with which the bob arrives at the lowest point is : [Use, $\mathbf{g : 10\ ms^{-2}}$]

A. $6\sqrt{5}\ \mathrm{ms}^{-1}$

B. $5\sqrt{6}\ \mathrm{ms}^{-1}$

C. $5\sqrt{5}\ \mathrm{ms}^{-1}$

D. $2\sqrt{5}\ \mathrm{ms}^{-1}$

Correct answer: A

Source solution

Sol.

Length of the pendulum,

$$\ell = 10\,\mathrm{m}$$

Initial potential energy (taking the lowest point as reference) is

$$E_i = mg\ell$$

Given that 10% of the energy is lost, the remaining energy is

$$E_f = \frac{9}{10}mg\ell$$

At the lowest point, this energy becomes kinetic energy:

$$\frac{9}{10}mg\ell = \frac{1}{2}mv^2$$

Substituting

$$\ell = 10\,\mathrm{m}, \qquad g = 10\,\mathrm{m/s^2},$$

$$\frac{9}{10} \times m \times 10 \times 10 = \frac{1}{2}mv^2$$

$$90m = \frac{1}{2}mv^2$$

$$v^2 = 180$$

$$v = \sqrt{180}$$

$$\boxed{v = 6\sqrt{5}\,\mathrm{m/s}}$$

Question 42

A uniform chain of length 3 meter and mass 3 kg overhangs a smooth table with 2 meter laying on the table. If k is the kinetic energy of the chain in joule as it completely slips off the table, then the value of k is (Take $g = 10\ m/s^2$)

Numerical answer: _____

Enter the requested value (an integer; 0 decimal places). Use the units and scaling stated in the question.

Correct answer: 40

Source solution

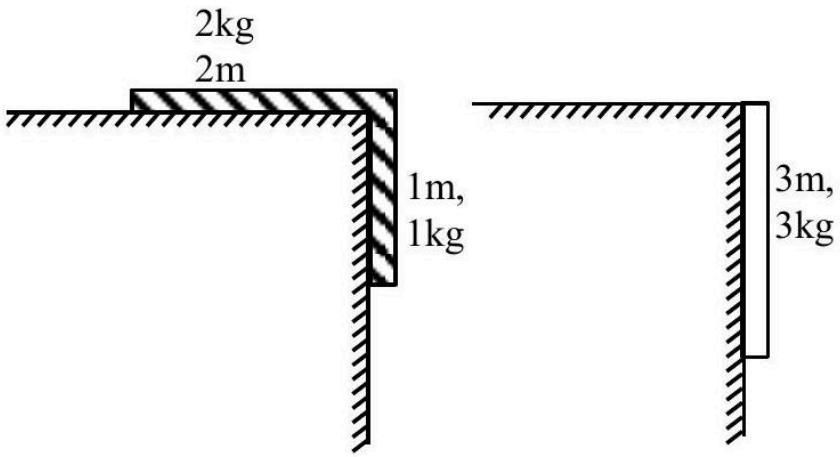

From energy conservation

$K_i + U_i = k_f + U_f$

$0 + \left(-1 \times 10 \times \frac{1}{2}\right) = k_f + \left(-3 \times 10 \times \frac{3}{2}\right)$

$-5 = k_f - 45$

$k_f = 40\ J$

Ans. 40.00

Question 43

A block of mass ' m ' (as shown in figure) moving with kinetic energy E compresses a spring through a distance 25 cm when, its speed is halved. The value of spring constant of used spring will be $\mathbf{nENm^{-1}}$ for $\mathbf{n} =$.

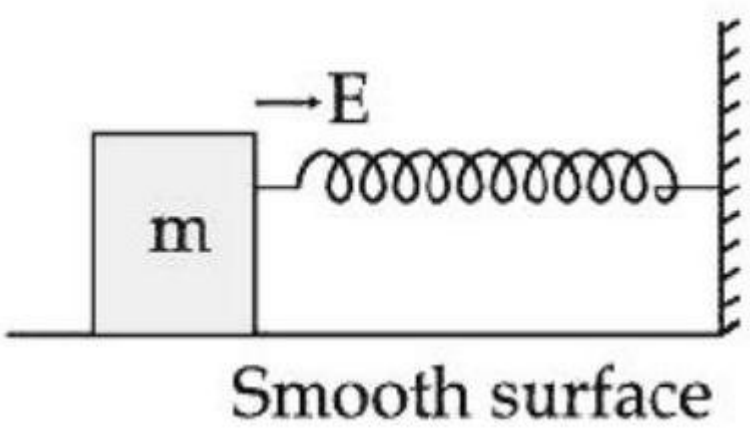

Numerical answer: _____

Enter the requested value (an integer; 0 decimal places). Use the units and scaling stated in the question.

Correct answer: 24

Source solution

Using work - energy theorem

$\mathbf{W_{net}} = (\mathbf{K_f} - \mathbf{K_i})$

$\Rightarrow -\frac{1}{2}Kx^2 = \frac{1}{2}m\left(\frac{v}{2}\right)^2 - \frac{1}{2}mv^2 = \frac{E}{4} - E$

$\Rightarrow \frac{1}{2}\mathbf{Kx^2} = \frac{\mathbf{3E}}{4} \Rightarrow \mathbf{K} = \frac{\mathbf{3E}}{\mathbf{2x^2}}$

$\Rightarrow \mathbf{K} = \frac{\mathbf{3E}}{\mathbf{2\times\left(\frac{1}{4}\right)^2}} = \mathbf{24E}$

$\mathbf{n = 24}$

Question 44

A particle is placed at the point A of a frictionless track ABC as shown in figure. It is gently pushed toward right. The speed of the particle when it reaches the point B is : (Take $\mathbf{g = 10\ m/s^2}$).

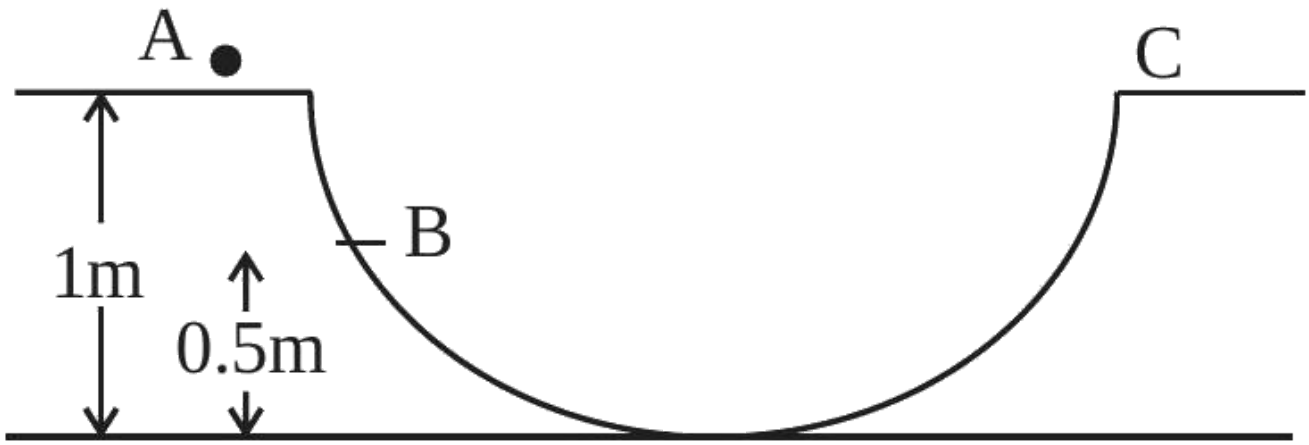

A. $20\ \mathrm{m/s}$

B. $\sqrt{10}\ \mathrm{m/s}$

C. $2\sqrt{10}\ \mathrm{m/s}$

D. $10\ \mathrm{m/s}$

Correct answer: B

Source solution

Sol. By conservation of energy,

$$\mathbf{KE_A + U_A = KE_B + U_B}$$

$$0 + mg(1) = \frac{1}{2}mv^2 + mg \cdot 0.5$$

$$v = \sqrt{g} = \sqrt{10\ \mathrm{m/s^2}}$$

Question 45

A block of mass 100 kg slides over a distance of 10 m on a horizontal surface. If the co-efficient of friction between the surfaces is 0.4 , then the work done against friction (in J) is :

A. 4200

B. 3900

C. 4000

D. 4500

Correct answer: C

Source solution

Sol.

Given,

$$m = 100\,\text{kg}, \qquad s = 10\,\text{m}, \qquad \mu = 0.4$$

The frictional force is

$$f = \mu m g$$

$$f = 0.4 \times 100 \times 10$$

$$f = 400\,\text{N}$$

The work done against friction is

$$W = f s$$

$$W = 400 \times 10$$

$$W = 4000\,\mathrm{J}$$

Question 46

A body of mass 'm' dropped from a height 'h' reaches the ground with a speed of $0.8\sqrt{gh}$. The value of workdone by the air-friction is :

A. -0.68 mgh

B. mgh

C. 1.64 mgh

D. 0.64 mgh

Correct answer: A

Source solution

Work done = Change in kinetic energy

$$\mathrm{W_{mg} + W_{air\text{-}friction}} = \frac{1}{2}\,\mathrm{m}(.8\sqrt{gh})^2 - \frac{1}{2}\,\mathrm{m}(0)^2$$

$$\mathrm{W_{air-friction}} = \tfrac{.64}{2}\mathrm{mgh} - \mathrm{mgh} = -0.68\mathrm{mgh}$$

Question 47

A body of mass 0.5 kg travels on straight line path with velocity $\mathbf{v} = \left(3\mathbf{x}^2 + 4\right)\mathbf{m/s}$. The net workdone by the force during its displacement from $\mathbf{x} = \mathbf{0}$ to $\mathbf{x} = \mathbf{2\ m}$ is :

A. 64 J

B. 60 J

C. 120 J

D. 128 J

Correct answer: B

Source solution

Sol.

Given,

$$v = 3x^2 + 4$$

At

$$x = 0,$$

$$v_i = 3(0)^2 + 4 = 4\,\mathrm{m/s}$$

At

$$x = 2,$$

$$v_f = 3(2)^2 + 4$$

$$v_f = 12 + 4 = 16\,\mathrm{m/s}$$

Using the work-energy theorem,

$$W = \Delta K$$

$$W = \frac{1}{2} m \left(v_f^2 - v_i^2 \right)$$

Given,

$$m = \frac{1}{2}\,\mathrm{kg}$$

Therefore,

$$W = \frac{1}{2} \times \frac{1}{2} \left(16^2 - 4^2 \right)$$

$$= \frac{1}{4} (256 - 16)$$

$$= \frac{240}{4}$$

$$= 60\,\mathrm{J}$$

Question 48

A body of mass 2 kg is driven by an engine delivering a constant power of $1\ \mathrm{J/s}$. The body starts from rest and moves in a straight line. After 9 seconds, the body has moved a distance (in m)

.

Numerical answer: _____

Enter the requested value (an integer; 0 decimal places). Use the units and scaling stated in the question.

Correct answer: 18

Source solution

18

P = Fv = mav

$\mathrm{a}=\frac{\mathrm{p}}{\mathrm{mv}}$

$\frac{dv}{dt}=\frac{p}{mv}$

$\int_0^u vdv=\frac{p}{m}\int_0^t dt$

$\frac{\mathrm{u}^2}{2}=\frac{\mathrm{p}}{\mathrm{m}}\mathrm{t}$

$u=\sqrt{\frac{2p}{m}}\sqrt{t}$

$\frac{\mathrm{dx}}{\mathrm{dt}}=\sqrt{\frac{\bar{\varphi}}{\mathrm{m}}}\sqrt{\mathrm{t}}$

$\int_0^{\mathrm{x}}\mathrm{dx}=\sqrt{\frac{2\mathrm{p}}{\mathrm{m}}}\int_0^9\sqrt{\mathrm{t}}\mathrm{dt}$

$x=\frac{2}{3}\left[(9)^{1/2}\right]^3$

$=\frac{2}{3}\times 27$

$\mathrm{x}=18$

II-method

$\mathrm{Pt}=\mathrm{w}=\frac{1}{2}\mathrm{mv}^2-0$

$1\times t=\frac{1}{2}\times 2\times u^2$

$\mathrm{u}=\sqrt{\mathrm{t}}$

$\frac{\mathrm{dx}}{\mathrm{dt}}=\sqrt{\mathrm{t}}=\int_0^1\mathrm{dx}=\int_0^9\sqrt{\mathrm{t}}\mathrm{dt}$

$x=\frac{\left[t^{3/2}\right]_0^9}{\frac{3}{2}}=18\ \mathrm{m}$

Question 49

A block of mass 5 kg starting from rest pulled up on a smooth incline plane making an angle of 30° with horizontal with an affective acceleration of 1 ms^{-2}. The power delivered by the pulling force at $t = 10\ s$ from the start is W.

[Use $g = 10\ ms^{-2}$]

(calculate the nearest integer value)

Numerical answer: _____

Enter the requested value or coefficient rounded to the nearest integer (0 decimal places).

Correct answer: 300

Source solution

$F - 5\ g \sin 30^\circ = 5a \Rightarrow F = 5 + 25 = 30\ N$

$V_{10} = u + at \Rightarrow v_{10} = 0 + 1(10) = 10\ m/s$

$P_{10} = Fv = 300\ W$

Question 50

A body of mass 5 kg is moving with a momentum of $10\ \mathrm{kg\ ms^{-1}}$. Now a force of 2 N acts on the body in the direction of its motion for 5 s . The increase in the Kinetic energy of the body is J.

Numerical answer: _____

Enter the requested value (an integer; 0 decimal places). Use the units and scaling stated in the question.

Correct answer: 30

Source solution

Given

$\mathrm{M} = 5\ \mathrm{kg}$

$P_i = 10\ \mathrm{kg\ m/s}$ (initial momentum)

Impulse $= \mathrm{F\Delta t} = \mathrm{\Delta P} = \mathrm{P_f} - \mathrm{P_i}$

$2 \times 5 = \mathrm{P_f} - 10$

$P_f = 20\ \mathrm{kg\ m/s}$ (final momentum)

Increase in $\mathrm{KE} = \mathrm{KE_f} - \mathrm{KE_i}$

$= \frac{\mathrm{P_f^2}}{2\,\mathrm{m}} - \frac{\mathrm{P_i^2}}{2\,\mathrm{m}}$

$= \frac{400}{2\times5} - \frac{100}{2\times5} = 40 - 10 = 30\ \mathrm{J}$

Question 51

A wooden block of mass 5 kg rests on soft horizontal floor. When an iron cylinder of mass 25 kg is placed on the top of the block, the floor yields and the block and the cylinder together go downwith an acceleration of $0.1\ \mathrm{ms}^{-2}$. The action force of the system on the floor is equal to:

A. 297 N

B. 294 N

C. 291 N

D. 196 N

Correct answer: C

Source solution

Sol.

Taking

$$g = 9.8\,\mathrm{m\,s^{-2}},$$

the weight of a $30\,\mathrm{kg}$ body is

$$W = mg$$

$$W = 30 \times 9.8$$

$$W = 294\,\mathrm{N}$$

If g is approximated as

$$g = 10\,\mathrm{m\,s^{-2}},$$

then

$$W = 30 \times 10$$

$$W = 300\,\mathrm{N}$$

The more accurate value is

$$\boxed{294\,\mathrm{N}}$$

Question 52

The radius of curvature of each surface of a convex lens having refractive index 1.8 is 20 cm . The lens is now immersed in a liquid of refractive index 1.5. The ratio of power of lens in air to its power in the liquid will be $x : 1$. The value of x is .

Numerical answer: _____

Enter the requested value (an integer; 0 decimal places). Use the units and scaling stated in the question.

Correct answer: 4

Source solution

$\mathrm{P} = (1.8 - 1)\left(\frac{1}{20} + \frac{1}{20}\right)$ by lens maker's formula $\mathrm{P}' = \left(\frac{1.8}{1.5} - 1\right)\left(\frac{1}{20} + \frac{1}{20}\right)$

Dividing $\frac{\mathrm{P}}{\mathrm{P}'} = \frac{0.8}{1.2-1} = 4$

Question 53

A block of mass 25 kg is pulled along a horizontal surface by a force at an angle 45° with the horizontal. The friction coefficient between the block and the surface is 0.25 . The displacement of 5 m of the block is:

A. 970 J

B. 735 J

C. 245 J

D. 490 J

Correct answer: C

Source solution

Sol.

Since the block moves with uniform velocity,

$$a = 0$$

Hence, the horizontal component of the applied force balances friction:

$$F\cos 45^\circ = f$$

The normal reaction is

$$N = mg - F\sin 45^\circ$$

Therefore,

$$F\cos 45^\circ = \mu N = \mu\left(mg - F\sin 45^\circ\right)$$

Substituting

$$\mu = 0.25, \qquad m = 25\,\text{kg}, \qquad g = 9.8\,\text{m/s}^2,$$

$$\frac{F}{\sqrt{2}} = 0.25\left(25 \times 9.8 - \frac{F}{\sqrt{2}}\right)$$

$$\frac{F}{\sqrt{2}} = 0.25\left(245 - \frac{F}{\sqrt{2}}\right)$$

$$1.25\,\frac{F}{\sqrt{2}} = 61.25$$

$$F = \frac{61.25\sqrt{2}}{1.25}$$

$$F = 49\sqrt{2}\,\text{N}$$

Work done by the external force over a displacement of $5\,\text{m}$:

$$W_{\text{ext}} = Fs\cos 45^\circ$$

$$= 49\sqrt{2} \times 5 \times \frac{1}{\sqrt{2}}$$

$$= 245\,\text{J}$$

Question 54

The pressure and volume of an ideal gas are related as $\mathbf{PV^{3/2} = K}$ (Constant). The work done when the gas is taken from state $\mathbf{A\,(P_1,\ V_1,\ T_1)}$ to state $\mathbf{B\,(P_2,\ V_2,\ T_2)}$ is :

A. $\mathbf{2\,(P_1\,V_1 - P_2\,V_2)}$

B. $\mathbf{2\,(P_2\,V_2 - P_1\,V_1)}$

C. $\mathbf{2\left(\sqrt{P_1}\,V_1 - \sqrt{P_2}\,V_2\right)}$

D. $2\left(P_2\sqrt{V_2} - P_1\sqrt{V_1}\right)$

Correct answer: A

Source solution

For $\mathbf{PV^x}$ = constant
If work done by gas is asked then

$$\mathbf{W = \frac{nR\Delta\,T}{1 - x}}$$

Here $\mathbf{x = \frac{3}{2}}$
$\therefore \mathbf{W = \frac{P_2\,V_2 - P_1\,V_1}{-\frac{1}{2}}}$
$= \mathbf{2\,(P_1\,V_1 - P_2\,V_2)}$ .... Option (1) is correct
If work done by external is asked then
$\mathbf{W = -2\,(P_1\,V_1 - P_2\,V_2)}$ .... Option (2) is correct

Question 55

Consider a block kept on an inclined plane (inclined at 45°) as shown in the figure. If the force required to just push it up the incline is 2 times the force required to just prevent it from sliding down, the coefficient of friction between the block and inclined plane (μ) is equal to :

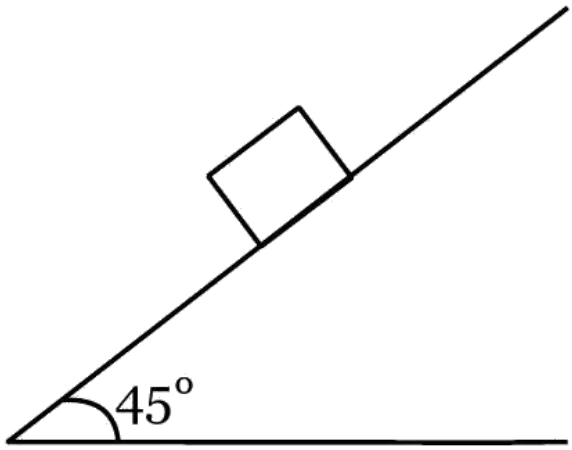

A. 0.25

B. 0.50

C. 0.60

D. 0.33

Correct answer: D

Source solution

Sol.

$$\mathrm{F_1 = mg\sin\theta + \mu mg\cos\theta}$$

$$\mathrm{F_1 = mg\sin 45^\circ + \mu mg\cos 45^\circ}$$

$$\mathrm{F_2 = mg\sin 45^\circ - \mu mg\cos 45^\circ}$$

$$\mathrm{F_1 = 2F_2}$$

$$\mathrm{mg\left(\frac{1}{\sqrt{2}} + \frac{\mu}{\sqrt{2}}\right) = 2mg\left(\frac{1}{\sqrt{2}} - \frac{\mu}{\sqrt{2}}\right)}$$

$$1+\mu=2-2\mu$$

$$3\mu=1$$

$$\mu=\frac{1}{3}=0.33$$

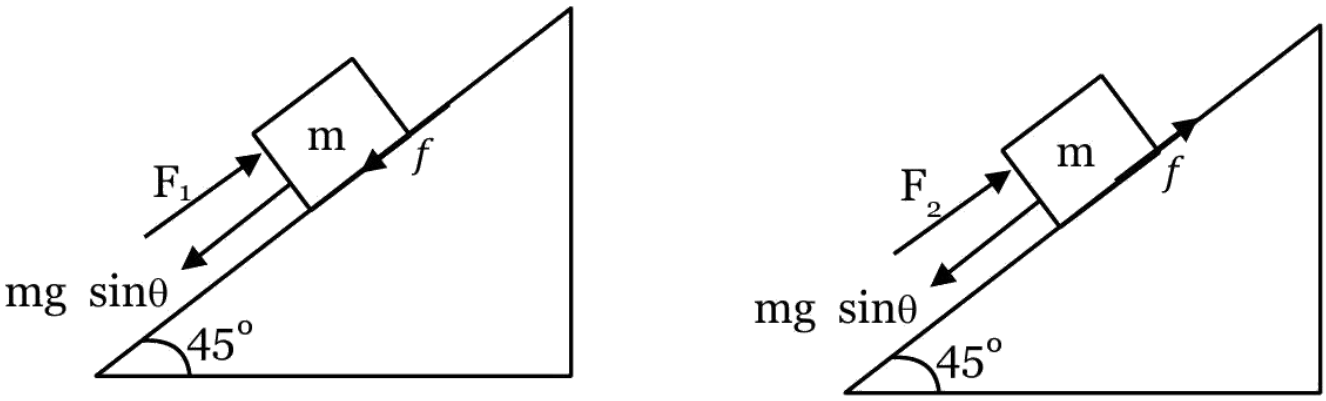

Question 56

The distance between an object and a screen is 100 cm . A lens can produce real image of the object on the screen for two different positions between the screen and the object. The distance between these two positions is 40 cm . If the power of the lens is close to $\left(\frac{N}{100}\right)D$ where N is an integer, the value of N is .

Numerical answer: _____

Enter the requested value (an integer; 0 decimal places). Use the units and scaling stated in the question.

Correct answer: 5

Source solution

5

$\because f=\frac{D^2-d^2}{4D}=\frac{100^2-40^2}{400}$

$=\frac{10000-1600}{400}$

$=\frac{100-16}{4}=\frac{84}{4}=21$

$\mathrm{p}=\frac{1}{\mathrm{f}}=\frac{1}{21}=\frac{1}{21}\times\frac{100}{100}=\left(\frac{4.76}{100}\right)=\frac{\mathrm{N}}{100}$

$\therefore \mathrm{N}\approx 5$

System of Particles and Rotational Motion

Questions 57-78 / 22 selected / 7.3% practice weight / Focus first

Question 57

A bob of mass ' m ' is suspended by a light string of length ' L '. It is imparted a minimum horizontal velocity at the lowest point A such that it just completes half circle reaching the top most position B. The ratio of kinetic energies $\frac{(\text{K.E.})_A}{(\text{K.E.})_B}$ is :

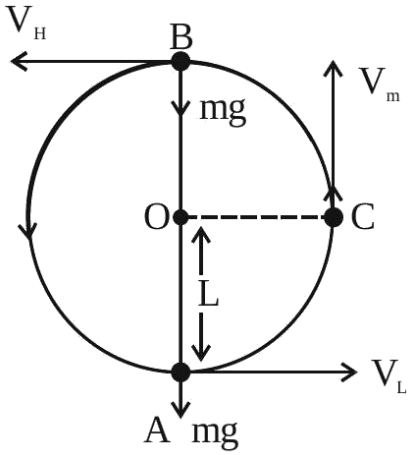

A. $3:2$

B. $5:1$

C. $2:5$

D. $1:5$

Correct answer: B

Source solution

Sol. Apply energy conservation between A & B

$$\frac{1}{2}mV_{\text{L}}^2 = \frac{1}{2}mV_{\text{H}}^2 + mg(2L)$$

$\because V_{\text{L}} = \sqrt{5gL}$

So,

$$V_{\mathrm{H}}=\sqrt{gL}$$

$$\frac{(K.E)_{\mathrm{A}}}{(K.E)_{\mathrm{B}}}=\frac{\frac{1}{2}m(\sqrt{5gL})^2}{\frac{1}{2}m(\sqrt{gL})^2}=\frac{5}{1}$$

Question 58

A particle of mass 100 g is projected at time $t = 0$ with a speed $20\ \mathrm{ms}^{-1}$ at an angle $45°$ to the horizontal as given in the figure. The magnitude of the angular momentum of the particle about the starting point at time $t = 2\ \mathrm{s}$ is found to be $\sqrt{\mathrm{K}}\mathrm{kgm}^2/\mathrm{s}$. The value of K is .
(Take $\mathrm{g} = 10\ \mathrm{ms}^{-2}$)

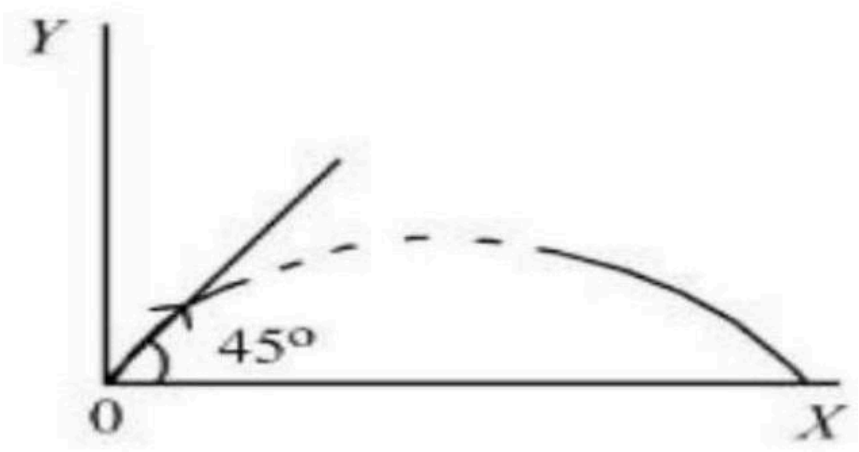

Numerical answer: _____

Enter the requested value (an integer; 0 decimal places). Use the units and scaling stated in the question.

Correct answer: 800

Source solution

800
Use $\Delta \mathrm{L} = \int_0^t \tau \mathrm{dt}$
$\mathrm{L}_0 = \int_0^2 (\mathrm{mg})\,(\mathrm{v_x t})\mathrm{dt}$
$= (mgv_x)\frac{t^2}{2}$
$= (0.1)(10)(10)(\sqrt{2}) \times \frac{2^2}{2}$
$= 20\sqrt{2}$
$= \sqrt{800}$

Question 59

A block of mass 10 kg is suspended from a string of length 4 m . When pulled by a force F along horizontal from the midpoint. The upper half of the string makes 45° with the vertical, value of F is

A. $100\ \mathrm{N}$

B. 90 N

C. $75\ \mathrm{N}$

D. 70 N

Correct answer: A

Source solution

Sol.

At the point of equilibrium, resolve the tension T into horizontal and vertical components.

Since the string makes an angle of 45°,

$$T_x = T\cos 45^\circ = \frac{T}{\sqrt{2}}$$

$$T_y = T\sin 45^\circ = \frac{T}{\sqrt{2}}$$

For horizontal equilibrium,

$$\frac{T}{\sqrt{2}} = F$$

Given,

$$T = 100\sqrt{2}\,\mathrm{N}$$

Therefore,

$$F = \frac{100\sqrt{2}}{\sqrt{2}}$$

$$\boxed{F = 100\,\mathrm{N}}$$

Question 60

γ_A is the specific heat ratio of monoatomic gas A having 3 translational degrees of freedom. γ_B is the specific heat ratio of polyatomic gas B having 3 translational, 3 rotational degrees of freedom and 1 vibrational mode. If $\frac{\gamma_A}{\gamma_B} = \left(1 + \frac{1}{n}\right)$, then the value of n is .

Numerical answer: _____

Enter the requested value (an integer; 0 decimal places). Use the units and scaling stated in the question.

Correct answer: 3

Source solution

$\frac{\gamma_A}{\gamma_B} = \frac{f_A+2}{f_A} \times \frac{f_B}{f_B+2}$
$= \frac{3+2}{3} \times \frac{(6+2)}{(6+2)+2}$
$= \frac{5}{3} \times \frac{8}{10} = \frac{40}{30}$
$\because \frac{40}{30} = 1 + \frac{1}{n}$
$\Rightarrow \frac{40}{30} - 1 = \frac{1}{n}$
$\Rightarrow n = 3$

Question 61

A 2 kg steel rod of length 0.6 m is clamped on a table vertically at its lower end and is free to rotate in vertical plane. The upper end is pushed so that the rod falls under gravity, Ignoring the friction due to clamping at its lower end, the speed of the free end of rod when it passes through its lowest position is ___ $\mathbf{ms^{-1}}$. (Take $\mathbf{g = 10\ ms^{-2}}$)

Numerical answer: _____

Enter the requested integer (0 decimal places).

Correct answer: 6

Source solution



ω



by energy conservation $\mathbf{mg\ell} = \frac{1}{2}\mathbf{I}\omega^2 = \frac{1}{2}\frac{\mathbf{m}\ell^2\omega^2}{3}$

$$\Rightarrow \omega = \sqrt{\frac{6g}{\ell}}$$

Speed $\mathbf{v} = \omega \mathbf{r} = \omega \ell = \sqrt{6\ \mathbf{g}\ell}$

$$v = \sqrt{6 \times 10 \times .6} = 6\ \mathbf{m/s}$$

Question 62

A string of area of cross-section $\mathbf{4\ mm^2}$ and length 0.5 is connected with a rigid body of mass 2 kg . The body is rotated in a vertical circular path of radius 0.5 m . The body acquires a speed of $\mathbf{5\ m/s}$ at the bottom of the circular path. Strain produced in the string when the body is at the bottom of the circle is $\times 10^{-5}$. (Use Young's modulus $10^{11}\ \mathbf{N/m^2}$ and $\mathbf{g = 10\ m/s^2}$)

Numerical answer: _____

Enter the requested value (an integer; 0 decimal places). Use the units and scaling stated in the question.

Correct answer: 30

Source solution

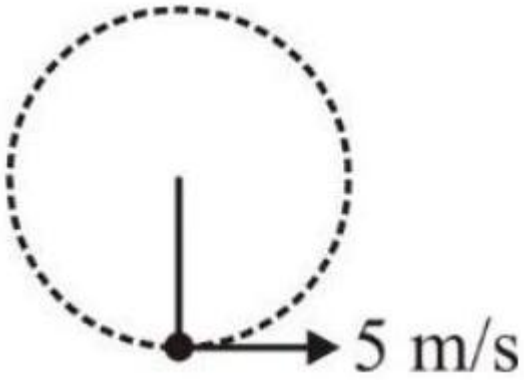

Strain $= \mathbf{F/AY}$

$= \frac{mg + \frac{mv^2}{R}}{AY}$

$= \frac{20 + \frac{2(5)^2}{0.5}}{3 \times 10^{-6} \times 10^{11}} = 30 \times 10^{-5}$

Question 63

A stone of mass 900 g is tied to a string and moved in a vertical circle of radius 1 m making 10 rpm . The tension in the string, when the stone is at the lowest point is (if $\pi^2 = 9.8$ and $\mathbf{g} = 9.8\ \mathbf{m/s^2}$)

A. 97 N

B. 9.8 N

C. 8.82 N

D. 17.8 N

Correct answer: B

Source solution

Sol.

Given,

$$m = 900\,\mathrm{g} = \frac{900}{1000}\,\mathrm{kg} = 0.9\,\mathrm{kg}$$

$$r = 1\,\mathrm{m}$$

$$N = 10\,\mathrm{rpm}$$

Angular speed,

$$\omega = \frac{2\pi N}{60} = \frac{2\pi(10)}{60} = \frac{\pi}{3}\,\mathrm{rad\ s^{-1}}$$

For the mass moving in a vertical circle, at the lowest point,

$$T - mg = mr\omega^2$$

Therefore,

$$T = mg + mr\omega^2$$

Substituting the values,

$$T = 0.9(9.8) + 0.9(1)\left(\frac{\pi}{3}\right)^2$$

$$= 8.82 + 0.9\left(\frac{\pi^2}{9}\right)$$

Using

$$\pi^2 \approx 9.8,$$

$$T = 8.82 + 0.98$$

$$T = 9.80\,\mathrm{N}$$

Hence,

$$\boxed{T = 9.8\,\mathrm{N}}$$

Question 64

A stone of mass m , tied to a string is being whirled in a vertical circle with a uniform speed. The tension in the string is :

A. the same throughout the motion

B. minimum at the highest position of the circular path

C. minimum at the lowest position of the circular path

D. minimum when the rope is in the horizontal position

Correct answer: B

Source solution

At the highest point,

$$T_{\text{top}} + mg = \frac{mv^2}{R}$$

$$T_{\text{top}} = \frac{mv^2}{R} - mg$$

At the lowest point,

$$T_{\text{bottom}} - mg = \frac{mv^2}{R}$$

$$T_{\text{bottom}} = \frac{mv^2}{R} + mg$$

Hence,

$$T_{\text{bottom}} > T_{\text{top}}$$

The tension is minimum at the highest point of the circular path.

Question 65

Two masses m and 2m are connected by a light string going over a pulley (disc) of mass 30m with radius $r = 0.1\ \mathrm{m}$. The pulley is mounted in a vertical plane and it is free to rotate about its axis. The 2m mass is released from rest and its speed when it has descended through a height of 3.6 m is _____ m/s. (Assume string does not slip and $g = 10\ \mathrm{m/s^2}$)

Numerical answer: _____

Enter an integer. Use the units and scaling requested in the question.

Correct answer: 2

Source solution

Using energy conservation

$$\frac{1}{2}mv^2 + \frac{1}{2}2mv^2 + \frac{1}{2}\frac{30mR^2}{2} \times \frac{v^2}{R^2} = mgh$$
$$9mv^2 = mgh$$
$$v = \sqrt{\frac{gh}{9}} = \sqrt{\frac{10 \times 3.6}{9}}$$
$$v = \sqrt{4} = 2m/s$$

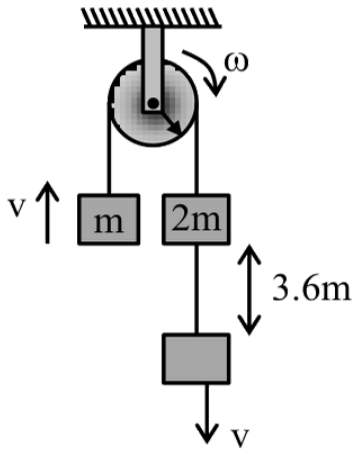

Question 66

A thin rod of mass 0.9 kg and length 1 m is suspended, at rest, from one end so that it can freely oscillate in the vertical plane. A particle of mass 0.1 kg moving in a straight line with velocity $80\ \mathrm{m/s}$ hits the rod at its bottom most point and sticks to it (see figure). The angular speed (in rad/s) of the rod immediately after the collision will be .



Numerical answer: _____

Enter the requested value (an integer; 0 decimal places). Use the units and scaling stated in the question.

Correct answer: 20

Source solution

20

$L_i = L_f$

$0.1 \times 80 \times 1 = \frac{0.9 \times 1^2}{3} \times \omega + (0.1)1^2\omega$

$8 = (0.3 + 0.1)\omega$

$8 = (0.4)\omega$

$\omega = \frac{80}{4} = 20$

Question 67

A uniform bar of length 12 cm and mass $20m$ lies on a smooth horizontal table. Two point masses m and $2m$ are moving in opposite directions with same speed of v and in the same plane as the bar, as shown in figure. These masses strike the bar simultaneously and get stuck to it. After collision the entire system is rotating with angular frequency ω. The ratio of v and ω is :

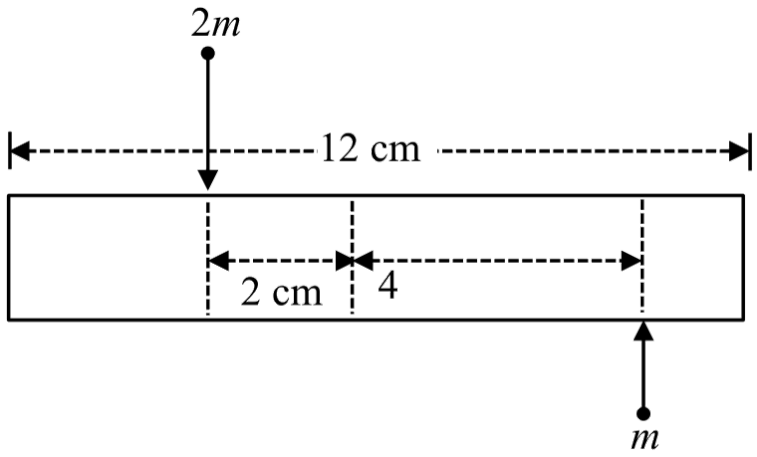

A. 33

B. $2\sqrt{88}$

C. 66

D. 32

Correct answer: A

Source solution

Using angular momentum conservation about COM of rod :

$$\mathrm{L_i = L_f}$$

$$\mathrm{m \times V \times 4 + 2\,m \times V \times 2 = \left(\frac{20\,m(12)^2}{12} + m \times 4^2 + 2\,m \times 2^2\right)\omega}$$

$$\mathrm{8mV = (240\,m + 24\,m)\omega}$$

$$8\ \mathrm{V} = 264\omega$$

$$\frac{V}{\omega} = 33$$

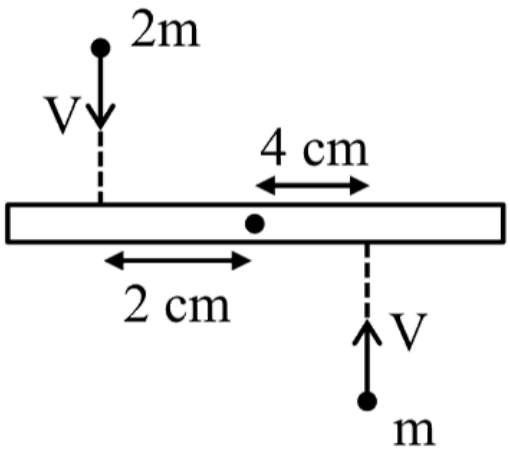

Question 68

Two masses 400 g and 350 g are suspended from the ends of a light string passing over a heavy pulley of radius 2 cm. When released from rest the heavier mass is observed to fall 81 cm in 9 s. The rotational inertia of the pulley is

_____

$\mathrm{kg.m^2}$.

$$(g = 9.8\ \mathrm{m/s^2})$$

A. 9.5×10^{-3}

B. 4.75×10^{-3}

C. 1.86×10^{-2}

D. 8.3×10^{-3}

Correct answer: A

Source solution

$$m_1 400 gm$$

$$S = ut + \frac{1}{2}at^2$$
$$a = \frac{2\,s}{t^2} = \frac{2 \times 0.81}{81} = 0.02\ \mathrm{m/s^2}$$

$m_1\, g - T_1 = m_1 a$
$T_2 - m_2\, g = m_2 a$

$$(T_1 - T_2)R = I \cdot \frac{a}{R}$$
$$\therefore a = \frac{(m_1 - m_2)g}{m_1 + m_2 + \frac{I}{R^2}}$$

$$0.02 = \frac{(400 - 350)\left(10^{-3}\right)g}{(400 + 350)\left(10^{-3}\right) + \frac{I}{R^2}}$$
$$\frac{I}{R^2} = \frac{50 \times 10^{-3}\ g}{0.02} - 750 \times 10^{-3} = 23.75$$
$$I = 23.75 \times 4 \times 10^{-4} = 9.5 \times 10^{-3}\ \mathrm{kg - m^2}$$

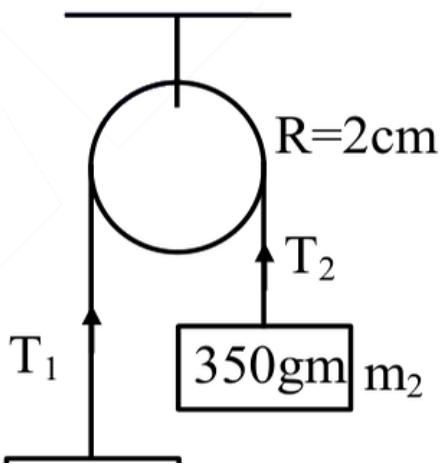
R=2cm
T2
T1
350gm
m2

Question 69

A block of mass $m = 1\ \mathrm{kg}$ slides with velocity $v = 6\ \mathrm{m/s}$ on a frictionless horizontal surface and collides with a uniform vertical rod and sticks to it as shown. The rod is pivoted about O and swings as a result of the collision making angle θ before momentarily coming to rest. If the rod has mass $\mathrm{M} = 2\ \mathrm{kg}$, and length $\mathrm{I} = 1\ \mathrm{m}$, the value of θ is approximately : (take $\mathrm{g} = 10\ \mathrm{m/s^2}$)

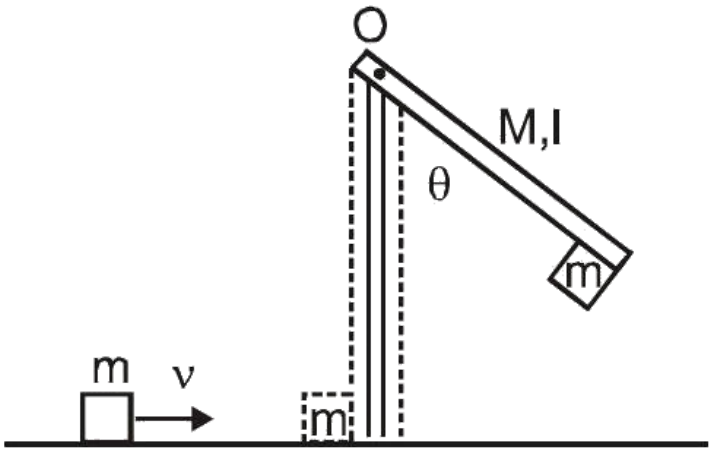

A. 49°

B. 63°

C. 69°

D. 55°

Correct answer: B

Source solution

Sol.

During the collision, angular momentum about the pivot is conserved.

$$mv\ell = I\omega$$

$$\omega = \frac{mv\ell}{I}$$

Immediately after collision, the rotational kinetic energy is

$$K = \frac{1}{2} I \omega^2$$

Substituting for ω,

$$K = \frac{1}{2} I \left(\frac{mv\ell}{I} \right)^2 = \frac{(mv\ell)^2}{2I}$$

At the highest position reached,

$$\frac{(mv\ell)^2}{2I} = (M+m) g \ell_{\text{CM}} (1 - \cos\theta)$$

Moment of inertia about the pivot:

$$I = \frac{M\ell^2}{3} + m\ell^2$$

Given

$$M = 2\,\text{kg}, \qquad m = 1\,\text{kg}, \qquad \ell = 1\,\text{m}$$

$$I = \frac{2}{3} + 1 = \frac{5}{3}$$

The centre of mass of the combined system is

$$\ell_{\text{CM}} = \frac{M(\ell/2) + m\ell}{M+m} = \frac{2(1/2)+1}{3} = \frac{2}{3}$$

Substituting the given values $(v = 6\,\text{m/s},\ g = 10\,\text{m/s}^2)$,

$$\frac{(1\times 6\times 1)^2}{2\times \frac{5}{3}} = 3\times 10\times \frac{2}{3}(1-\cos\theta)$$

$$\frac{36\times 3}{10} = 20(1-\cos\theta)$$

$$10.8 = 20(1-\cos\theta)$$

$$1-\cos\theta = \frac{27}{50}$$

$$\cos\theta = 1-\frac{27}{50} = \frac{23}{50}$$

$$\theta = \cos^{-1}\left(\frac{23}{50}\right)$$

$$\boxed{\theta \approx 63^\circ}$$

Question 70

A body of mass 14 kg initially at rest explodes and breaks into three fragments of masses in the ratio 2 : 2 : 3. The two pieces of equal masses fly off perpendicular to each other with a speed of 18 m/s each. The velocity of the heavier fragment is

_____

m/s.

A. $10\sqrt{2}$

B. $12\sqrt{2}$

C. 12

D. $24\sqrt{2}$

Correct answer: B

Source solution

TEST PAPER WITH SOLUTION

Apply C.O.M

$$M_1V_1 + M_2V_2 + M_3V_3 = 0$$
$$2(-18i) + 2(-18j) + 3V_3 = 0$$
$$V_3 = 12i + 12j$$
$$|V_3| = 12\sqrt{2}\ \text{m/s}$$

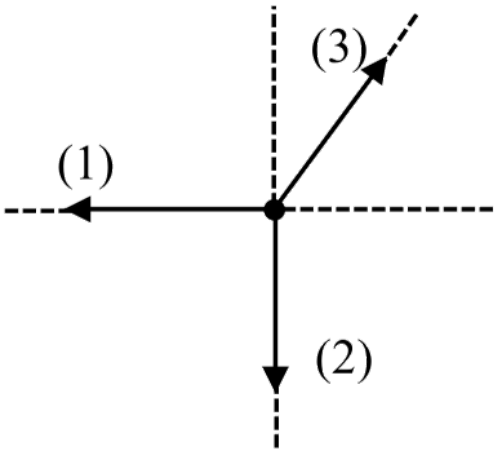

Question 71

A solid sphere of mass 5 kg and radius 10 cm is kept in contact with another solid sphere of mass 10 kg and radius 20 cm. The moment of inertia of this pair of spheres about the tangent passing through the point of contact is

_____

$\mathbf{kg.m^2}$.

A. 0.36

B. 0.72

C. 0.18

D. 0.63

Correct answer: D

Source solution

$$\mathbf{I} = \frac{7}{5}\left[\mathbf{m_1R_1^2 + m_2R_2^2}\right]$$

$$= \frac{7}{5}\left[5(10)^2 + 10 \times (20)^2\right] \times 10^{-4}$$

$$\mathbf{I = 63 \times 10^{-2}\ kg\ m^2}$$

$$\mathbf{I = 0.63\ kg\ m^2}$$

Question 72

A fly wheel having mass 3 kg and radius 5 m is free to rotate about a horizontal axis. A string having negligible mass is wound around the wheel and the loose end of the string is connected to a 3 kg mass. The mass is kept at rest initially and released. Kinetic energy of the wheel when the mass descends by 3 m is_____$J.\left(\mathbf{g}=10\ \mathbf{m/s^2}\right)$

Numerical answer: _____

Enter an integer. Use the units and scaling requested in the question.

Correct answer: 30

Source solution

$\mathbf{mg}\times\mathbf{3}=\frac{1}{2}.\frac{\mathbf{mR^2}}{2}\omega^2+\frac{1}{2}\mathbf{mv^2}$
& $\mathbf{v}=\omega\mathbf{R}$
From equation (i) & (ii)
$\mathbf{g}\times\mathbf{3}=\frac{3}{4}.\mathbf{v^2}$
K.E. of flywheel $=\frac{1}{2}\times\frac{\mathbf{mR^2}}{2}\times\omega^2=\frac{1}{4}\mathbf{mv^2}$
$=\frac{1}{4}\times\mathbf{3}\times\mathbf{40}=\mathbf{30}$ Joule

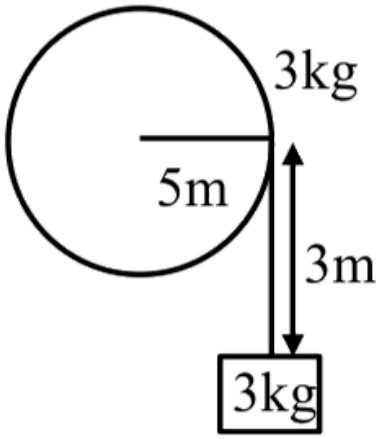

Question 73

A thin uniform rod (X) of mass M and length L is pivoted at a height $\left(\frac{L}{3}\right)$ as shown in the figure. The rod is allowed to fall from a vertical position and lie horizontally on the table. The angular velocity of this rod when it hits the table top, is

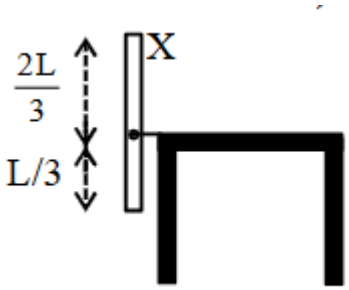

A. $\sqrt{\frac{3}{2}\frac{g}{L}}$

B. $\frac{3}{\sqrt{2}}\sqrt{\frac{g}{L}}$

C. $\frac{1}{\sqrt{2}}\sqrt{\frac{g}{L}}$

D. $\sqrt{\frac{3g}{L}}$

Correct answer: D

Source solution

$$\text{Distance of CM from pivot} = \left|\frac{L}{2} - \frac{L}{3}\right| = \frac{L}{6}$$

As the rod falls from vertical to horizontal, the centre of mass drops by

$$h = \frac{L}{6}.$$

Using conservation of mechanical energy,

$$Mg\left(\frac{L}{6}\right) = \frac{1}{2}I_P\omega^2,$$

where I_P is the moment of inertia about the pivot. For a uniform rod,

$$I_P = I_{\text{CM}} + M\left(\frac{L}{6}\right)^2 = \frac{1}{12}ML^2 + \frac{1}{36}ML^2 = \frac{1}{9}ML^2.$$

Substituting,

$$Mg\left(\frac{L}{6}\right)=\frac{1}{2}\left(\frac{1}{9}ML^2\right)\omega^2.$$

Cancelling M,

$$\frac{gL}{6}=\frac{L^2}{18}\omega^2.$$

Hence,

$$\omega^2=\frac{3g}{L}$$

and therefore

$$\boxed{\omega=\sqrt{\frac{3g}{L}}}.$$

Option 4

Question 74

Two small balls with masses m and 2m are attached to both ends of a rigid rod of length d and negligible mass. If angular momentum of this system is L about an axis (A) passing through its centre of mass and perpendicular to the rod then angular velocity of the system about A is :

A. $\frac{3}{2}\frac{L}{md^2}$

B. $\frac{2L}{md^2}$

C. $\frac{4}{3}\frac{L}{md^2}$

D. $\frac{2L}{5md^2}$

Correct answer: A

Source solution

$$L = I\omega \text{ and } \omega = \frac{L}{I}$$

$$\omega = \frac{L}{m\left(\frac{2d}{3}\right)^2 + 2m\left(\frac{d}{3}\right)^2} = \frac{L}{\frac{4}{9}md^2 + \frac{2}{9}md^2} = \frac{L}{\frac{6md^2}{9}}$$

$$\omega = \frac{3L}{2md^2}$$

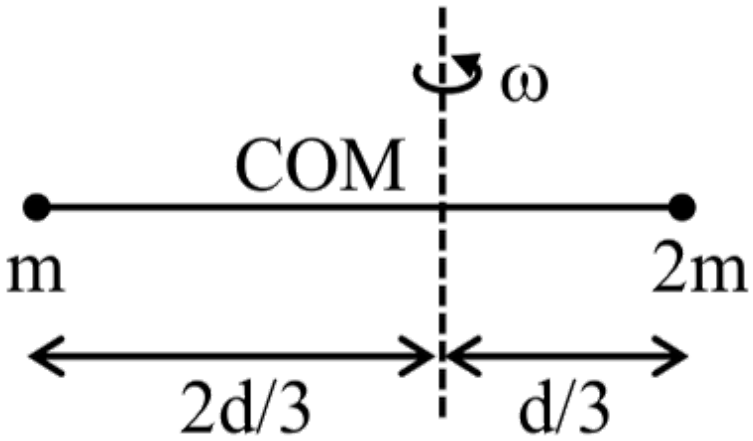

Question 75

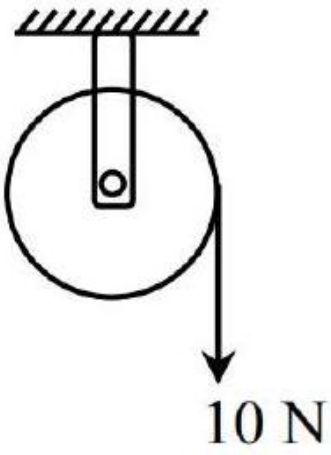

A wheel of radius 0.2 m rotates freely about its center when a string that is wrapped over its rim is pulled by force of 10 N as shown in figure. The established torque produces an angular acceleration of 2rad/s^2. Moment of inertia of the wheel is kgm^2.
(Acceleration due to gravity $= 10\ \text{m/s}^2$)

Numerical answer: _____

Enter the requested value (an integer; 0 decimal places). Use the units and scaling stated in the question.

Correct answer: 1

Source solution

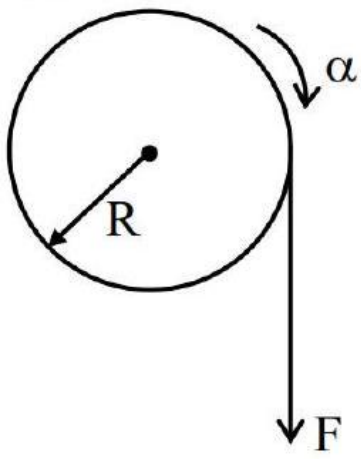

Sol.

$$\mathbf{FR = I\alpha}$$

$$\mathbf{\Rightarrow I = \frac{FR}{\alpha} = \frac{10 \times 0.2}{2} = 1\ kg - m^2}$$

Question 76

Match List-I with List-II.

List-I	List-II
(A) Moment of inertia of solid sphere of radius R about any tangent	(I) $\frac{5}{3}MR^2$
(B) Moment of inertia of hollow sphere of radius R about any tangent	(II) $\frac{7}{5}MR^2$
(C) Moment of inertia of circular ring of radius R about its diameter	(III) $\frac{1}{4}MR^2$
(D) Moment of inertia of circular disc of radius R about any diameter	(IV) $\frac{1}{2}MR^2$

Question: Choose the correct answer from the options given below.

A. A-II, B-II, C-IV, D-III

B. A-I, B-II, C-IV, D-III

C. A-II, B-I, C-III, D-IV

D. A-I, B-II, C-III, D-IV

Correct answer: A

Source solution

(A) Solid sphere about a tangent

Using the parallel axis theorem,

$$I_{\text{tangent}} = I_{\text{diameter}} + MR^2$$

$$= \frac{2}{5}MR^2 + MR^2 = \frac{7}{5}MR^2$$

$$\therefore \quad \text{A} \rightarrow (\text{II})$$

(B) Hollow sphere about a tangent

$$I_{\text{tangent}} = I_{\text{diameter}} + MR^2 = \frac{2}{3}MR^2 + MR^2 = \frac{5}{3}MR^2$$

$$\therefore \quad \text{B} \rightarrow (\text{I})$$

(C) Circular ring about its diameter

Using the perpendicular axis theorem,

$$I_z = MR^2 = I_x + I_y$$

$$I_x = I_y = \frac{1}{2}MR^2$$

$$\therefore \quad \text{C} \rightarrow (\text{IV})$$

(D) Circular disc about any diameter

$$I_z = \frac{1}{2}MR^2 = I_x + I_y$$

$$I_x = I_y = \frac{1}{4}MR^2$$

$$\therefore \quad \mathrm{D} \rightarrow (\mathrm{III})$$

$$\boxed{A \rightarrow II, \quad B \rightarrow I, \quad C \rightarrow IV, \quad D \rightarrow III}$$

Question 77

A cord is wound round the circumference of wheel of radius r. The axis of the wheel is horizontal and the moment of inertia about it is I. A weight mg is attached to the cord at the end. The weight falls from rest. After falling through a distance ' h ', the square of angular velocity of wheel will be:

A. $\frac{2gh}{I+mr^2}$

B. 2 gh

C. $\frac{2mgh}{I+2mr^2}$

D. $\frac{2mgh}{I+mr^2}$

Correct answer: D

Source solution

Sol. using energy conservation between points A and B

$$mgh = \frac{1}{2}m(wR)^2 + \frac{1}{2}I\omega^2$$

$$2mgh = \left(MR^2 + I\right)\omega^2$$

$$\omega^2 = \frac{2mgh}{I + MR^2}$$

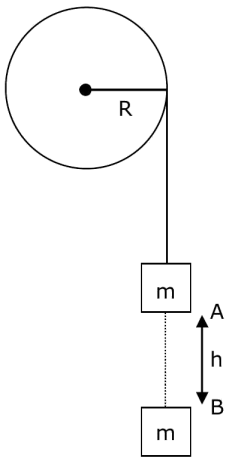

Question 78

The moment of inertia of a square loop made of four uniform solid cylinders, each having radius R and length $\mathbf{L(R < L)}$ about an axis passing through the mid points of opposite sides, is (Take the mass of the entire loop as M) :

A. $\frac{3}{8}\mathrm{MR}^2+\frac{7}{12}\mathrm{ML}^2$

B. $\frac{3}{4}MR^2+\frac{1}{6}ML^2$

C. $\frac{3}{4}MR^2+\frac{7}{12}ML^2$

D. $\frac{3}{8}\mathrm{MR}^2+\frac{1}{6}\mathrm{ML}^2$

Correct answer: D

Source solution

$$
\begin{aligned}
I_{\text{net}} &= 2\left(I_1+I_2\right) \\
&= 2\left(\frac{M'R^2}{4}+\frac{M'\ell^2}{12}\right)+2\left(\frac{M'R^2}{2}+M'\left(\frac{\ell}{2}\right)^2\right) \\
&= \frac{M'R^2}{2}+\frac{M'R^2}{6}+M'R^2+\frac{M'\ell^2}{2} \\
&= \frac{3M'R^2}{2}+\frac{2M'\ell^2}{3}
\end{aligned}
$$

Given masses $\mathrm{M'}=\frac{\mathrm{M}}{4}$
So, $\mathrm{I}=\frac{3(\mathrm{M}/4)\mathrm{R}^2}{2}+2\frac{(\mathrm{M}/4)\ell^2}{3}$

$$\mathrm{I}=\frac{3}{8}\mathrm{MR}^2+\frac{\mathrm{M}\ell^2}{6}$$

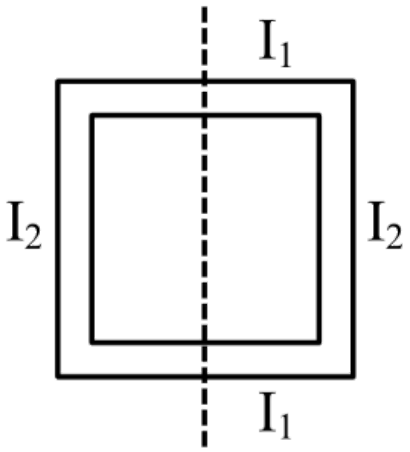
I_1
I_2
I_2
I_1

Gravitation

Questions 79-79 / 1 selected / 0.3% practice weight / Consolidate

Question 79

Given below are two statements : one is labelled as Assertion A and the other is labelled as Reason RAssertion A : The kinetic energy needed to project a body of mass m from earth surface to infinity is $\frac{1}{2}\mathbf{mgR}$, where R is the radius of earth.Reason $\mathbf{R}$: The maximum potential energy of a body is zero when it is projected to infinity from earth surface.In the light of the above statements, choose the correct answer from the option given below

A. A False but $\mathbf{R}$ is true

B. Both $\mathbf{A}$ and $\mathbf{R}$ are true and $\mathbf{R}$ is the correct explanation of $\mathbf{A}$

C. $\mathbf{A}$ is true but $\mathbf{R}$ is false

D. Both $\mathbf{A}$ and $\mathbf{R}$ are true but $\mathbf{R}$ is NOT the correct explanation of $\mathbf{A}$

Correct answer: A

Source solution

The minimum kinetic energy required to project a body of mass m from the Earth's surface to infinity is

$$K = \frac{1}{2}mv_e^2.$$

Since

$$v_e = \sqrt{\frac{2GM}{R}},$$

we get

$$K = \frac{1}{2}m\left(\frac{2GM}{R}\right) = \frac{GMm}{R}.$$

Using

$$g = \frac{GM}{R^2},$$

$$K = mgR.$$

Thus,

$$\boxed{K = mgR},$$

not

$$\frac{1}{2}mgR.$$

Therefore, Assertion A is false.

At infinity,

$$U = -\frac{GMm}{r} \to 0.$$

Hence, the gravitational potential energy is maximum and equal to zero at infinity.

Therefore, Reason R is true.

$$\boxed{\textbf{Assertion A is false, but Reason R is true.}}$$

Mechanical Properties of Solids

Questions 80-90 / 11 selected / 3.7% practice weight / Focus first

Question 80

Two wires A and B made of different materials of length 6.0 cm and 5.4 cm, respectively and area of cross sections $3.0 \times 10^{-5}\ \mathrm{m}^2$ and $4.5 \times 10^{-5}\ \mathrm{m}^2$, respectively are stretched by the same magnitude under a given load. The ratio of the Young's modulus of A to that of B is x:3. The value of x is _____.

A. 1

B. 4

C. 2

D. 5

Correct answer: D

Source solution

$\mathrm{T} = \frac{\mathrm{F/A}}{\Delta\ell/\ell} \Rightarrow \mathrm{Y} = \frac{\mathrm{F}\ell}{\mathrm{A}\Delta\ell}$

$$\frac{Y_A}{Y_B} = \frac{\ell_A}{\ell_B}\left(\frac{A_B}{A_A}\right)$$

$$= \frac{6}{5.4}\left(\frac{4.5 \times 10^{-5}}{3 \times 10^{-5}}\right) = \frac{9}{5.4} = \frac{5}{3} \Rightarrow \frac{x}{3} = \frac{5}{3}$$

$$x = 5$$

Question 81

A 3 m long wire of radius 3 mm shows an extension of 0.1 mm when loaded vertically by a mass of 50 kg in an experiment to determine Young's modulus. The value of Young's modulus of the wire as per this experiment is $\mathbf{P \times 10^{11} Nm^{-2}}$, where the value of P is : $\left(\text{Take } \mathbf{g = 3\pi\ m/s^2}\right)$

A. 5

B. 10

C. 25

D. 2.5

Correct answer: A

Source solution

Sol.

$$\frac{50\,g}{\pi r^2} = y \cdot \frac{\Delta \ell}{\ell}$$

$$\frac{50 \cdot 3\pi}{\pi \cdot \left(3 \times 10^{-3}\right)^2} = P \cdot 10^{11} \cdot \frac{0.1 \times 10^{-3}}{3}$$

$$\Rightarrow P = \frac{50 \cdot 3 \cdot 3}{3^2 \cdot 10^{-6} \cdot 10^{11} \cdot 0.1 \times 10^{-3}}$$

$$P = 5$$

Question 82

One end of a metal wire is fixed to a ceiling and a load of 2 kg hangs from the other end. A similar wire is attached to the bottom of the load and another load of 1 kg hangs from this lower wire. Then the ratio of longitudinal strain of upper wire to that of the lower wire will be .
[Area of cross section of wire $= 0.005\ \text{cm}^2$, $\text{Y} = 2 \times 10^{11}\text{Nm}^{-2}$ and $\text{g} = 10\ \text{ms}^{-2}$]

Numerical answer: _____

Enter the requested value or coefficient rounded to the nearest integer (0 decimal places).

Correct answer: 3

Source solution

The upper wire supports both loads, so $T_1 = 30\,\text{N}$; the lower wire supports the 1 kg load, so $T_2 = 10\,\text{N}$. For identical wires, strain is $T/(AY)$. The ratio is $30/10 = 3$.

Question 83

A uniform heavy rod of mass 20 kg . Cross sectional area $\mathbf{0.4\ m^2}$ and length 20 m is hanging from a fixed support. Neglecting the lateral contraction, the elongation in the rod due to its own weight is $\mathbf{x \times 10^{-9}\ m}$. The value of x is .

:(Given. Young's modulus $\mathbf{Y = 2 \times 10^{11} Nm^{-2}}$ and $\mathbf{g = 10\ ms^{-2}}$)

Numerical answer: _____

Enter the requested value (an integer; 0 decimal places). Use the units and scaling stated in the question.

Correct answer: 25

Source solution

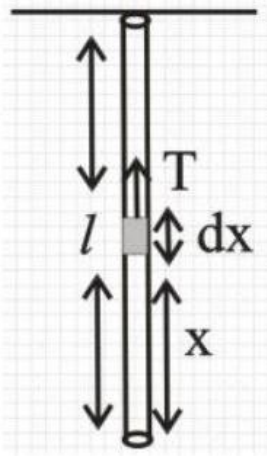

$\mathbf{Y = \frac{T}{A}\frac{dx}{dy}}$

$\mathbf{m = 20\ kg}$

$\mathbf{A = 0.4 m^2}$

$\mathbf{1 = 20\ m}$

let extension is dy in length dx

$\mathbf{Y = \frac{stress}{strain}}$

$\mathbf{Y = \frac{\frac{T}{A}}{\frac{dy}{dx}} = \frac{T}{A} \cdot \frac{dx}{dy}}$

$\mathbf{dy = \frac{Tdx}{AY}}$

Tension at a distance x from lower end $= \mathbf{\frac{mg}{\ell}x}$

So. $\mathbf{\int_0^{\Delta l} dy = \int_0^{\ell} \frac{mg}{\ell} x \frac{dx}{AY}}$

$\mathbf{\Delta \ell = \frac{mg}{\ell AY}\left[\frac{x^2}{2}\right]_0^{\ell}}$

$\mathbf{\Delta \ell = \frac{mg\ell}{2AY}}$

$\mathbf{\Delta \ell = \frac{20 \times 10 \times 20}{2 \times 0.4 \times 2 \times 10^{11}}}$

2500×10^{-11}
$\Delta \ell = 25 \times 10^{-9}$
$= \mathbf{x} \times 10^{-9}$
$\mathbf{x} = 25$

Question 84

An object of mass m is suspended at the end of a massless wire of length L and area of crosssection A. Young modulus of the material of the wire is Y. If the mass is pulled down slightly its frequency of oscillation along the vertical direction is:

A. $f = \frac{1}{2\pi}\sqrt{\frac{YA}{mL}}$

B. $f = \frac{1}{2\pi}\sqrt{\frac{\mathrm{mL}}{\mathrm{YA}}}$

C. $f = \frac{1}{2\pi}\sqrt{\frac{YL}{mA}}$

D. $f = \frac{1}{2\pi}\sqrt{\frac{mA}{YL}}$

Correct answer: A

Source solution

Young's modulus is

$$Y = \frac{F/A}{\Delta L/L}.$$

Therefore,

$$Y = \frac{FL}{A\Delta L},$$

or

$$F = \frac{YA\,\Delta L}{L}.$$

Hence, the effective spring constant of the wire is

$$k = \frac{F}{\Delta L} = \frac{YA}{L}.$$

The frequency of oscillation of a mass m attached to the wire is

$$f = \frac{1}{2\pi}\sqrt{\frac{k}{m}}.$$

Substituting

$$k = \frac{YA}{L},$$

we get

$$\boxed{f = \frac{1}{2\pi}\sqrt{\frac{YA}{Lm}}}.$$

Question 85

A wire of cross sectional area A, modulus of elasticity $2 \times 10^{11} \mathrm{Nm}^{-2}$ and length 2 m is stretched between two vertical rigid supports. When a mass of 2 kg is suspended at the middle it sags lower from its original position making angle $\theta = \frac{1}{100}$ radian on the points of support. The value of A is

$\times 10^{-4}\ \mathrm{m}^2$ (consider $\mathrm{x} \ll \mathrm{L}$).

(given : $\mathrm{g} = 10\ \mathrm{m/s}^2$)

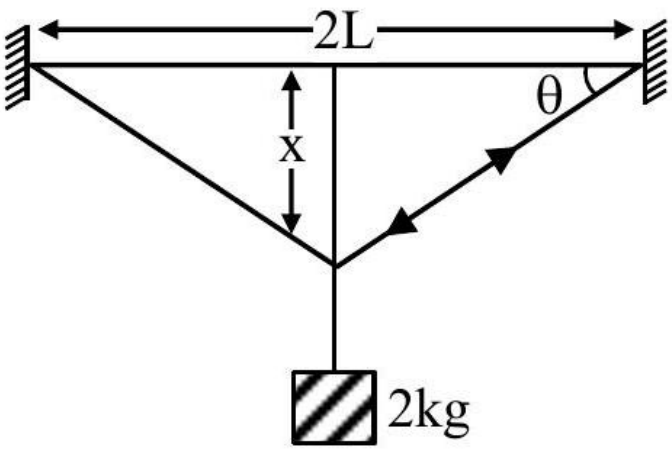

Numerical answer: _____

Enter the requested value (an integer; 0 decimal places). Use the units and scaling stated in the question.

Correct answer: 1

Source solution

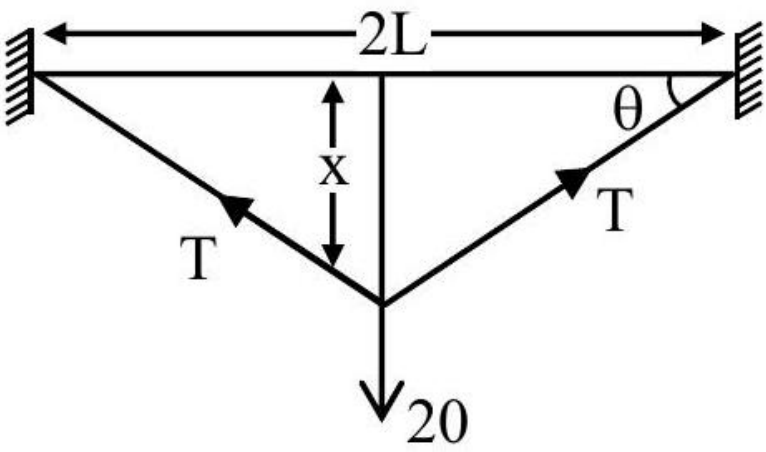

In vertical derection

$2\,T\sin\theta = 20$

using small angle approximation $\sin\theta = \theta$

$\theta = \frac{1}{100}$

$\therefore T = \frac{10}{\theta}$

$T = 1000\ N$

Change in length $\Delta L \quad = 2\sqrt{x^2 + L^2} - 2\,L$

$= 2\,L\left[1 + \frac{x^2}{2\,L^2} - 1\right]$

$\Delta L = \frac{x^2}{L}$

$\therefore$ Modulus of elasticity $= \frac{\text{stress}}{\text{strain}}$

$2 \times 10^{11} = \frac{10^3}{A \times \frac{x^2}{L}} \times 2\,L$

$\therefore A = 1 \times 10^{-4}\ m^2$

Question 86

A wire of length ' L ' and radius ' r ' is clamped rigidly at one end. When the other end of the wire is pulled by a force f , its length increases by ' ℓ '. Another wire of same material of length ' 2 L ' and radius ' $2r$ ' is pulled by a force ' $2f$ '. Then the increase in its length will be :

A. 2ℓ

B. ℓ

C. 4ℓ

D. $\ell/2$

Correct answer: B

Source solution

Sol.

$$\frac{\mathrm{f}}{\pi \mathrm{r}^2}=\mathrm{Y}\frac{\ell}{\mathrm{L}}$$

$$\frac{2\mathrm{f}}{\pi(2\mathrm{r})^2}=\mathrm{Y}\frac{\ell'}{2\mathrm{L}}$$

$$\Rightarrow \frac{2}{1}=\frac{2\ell'}{\ell}\Rightarrow \ell'=\ell$$

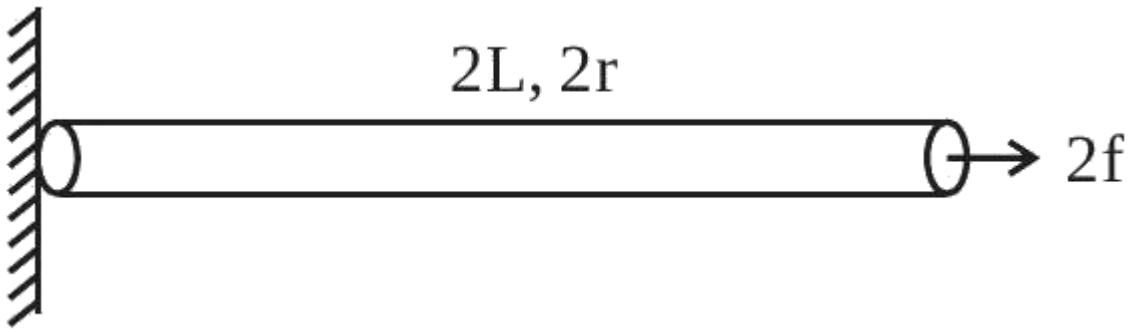

Question 87

Two wires each of radius 0.2 cm and negligible mass, one made of steel and other made of brass are loaded as shown in the figure.The elongation of the steel wire is $\times 10^{-6}\ \mathrm{m}$. [Young ' s modulus for steel $= 2 \times 10^{11} \mathrm{Nm}^{-2}$ and $\mathrm{g} = 10\ \mathrm{ms}^{-2}$]

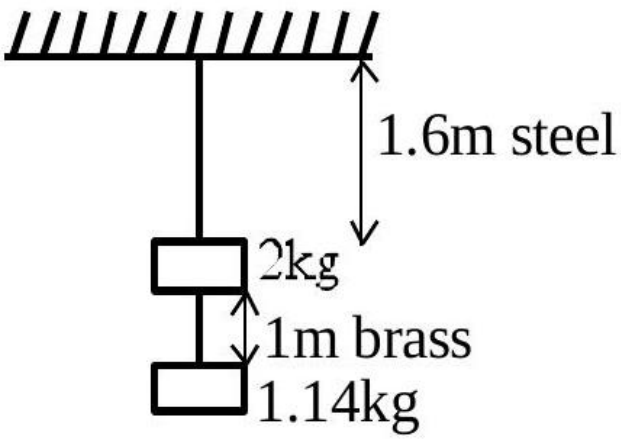

Numerical answer: _____

Enter the requested value (an integer; 0 decimal places). Use the units and scaling stated in the question.

Correct answer: 20

Source solution

Tension in steel wire $\mathrm{T_2} = 2\,\mathrm{g} + \mathrm{T_1}\ \mathrm{T_2} = 20 + 11.4 = 31.4\ \mathrm{N}$

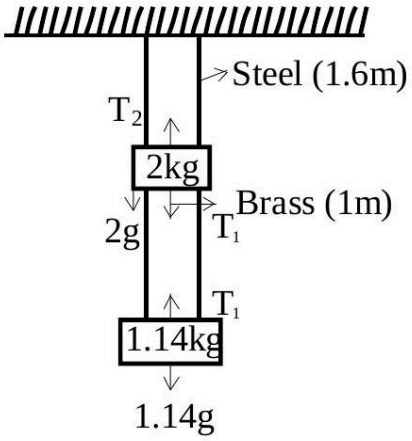

Elongation in steel wire $\Delta \mathrm{L} = \frac{\mathrm{T_2\,L}}{\mathrm{Ay}}$

$\Delta \mathrm{L} = \frac{31.4 \times 1.6}{\pi (0.2 \times 10^{-2})^2 \times 2 \times 10^{11}}$

$$\Delta L = \frac{16}{2\times4\times10^{-6}\times10^{11}}$$
$$= 2 \times 10^{-5}\ \mathrm{m}$$
$$= 20 \times 10^{-6}\ \mathrm{m}$$

Question 88

In a Young's double slit experiment, the slits are separated by 0.3 mm and the screen is 1.5 m away from the plane of slits. Distance between fourth bright fringes on both sides of central bright is 2.4 cm . The frequency of light used is $\times 10^{14}\ \mathrm{Hz}$.

Numerical answer: _____

Enter the requested value (an integer; 0 decimal places). Use the units and scaling stated in the question.

Correct answer: 5

Source solution

$$8\beta = 2.4\ \mathrm{cm}$$
$$\frac{8\lambda D}{d} = 2.4\ \mathrm{cm}$$
$$\frac{8\times1.5\times c}{0.3\times10^{-3}\times f} = 2.4 \times 10^{-2}$$
$$f = 5 \times 10^{14}\ \mathrm{Hz}$$

Question 89

In a Young's double slit experiment, the intensity at a point is $\left(\frac{1}{4}\right)^{\text{th}}$ of the maximum intensity, the minimum distance of the point from the central maximum is $\quad\quad\ \mu\text{m}$.
(Given : $\lambda = 600\ \text{nm},\ \text{d} = 1.0\ \text{mm}, \text{D} = 1.0\ \text{m}$)

Numerical answer: _____

Enter the requested value (an integer; 0 decimal places). Use the units and scaling stated in the question.

Correct answer: 200

Source solution

$I = I_0 \cos^2\left(\frac{\Delta\phi}{2}\right)$
$\frac{\text{I}_0}{4} = \cos^2\left(\frac{\Delta\phi}{2}\right)$
$\Delta\phi = \frac{2\pi}{3}$
$\frac{2\pi}{\lambda}\left(\frac{\text{yd}}{\text{D}}\right) = \frac{2\pi}{3}$
$\text{y} = \frac{\lambda\text{D}}{3\,\text{d}} = \frac{600\times10^{-9}\times1}{3\times10^{-3}} = 2\times10^{-4}\ \text{m}$

Question 90

Match List-I with List-II.

List-I	List-II
(a) Angular momentum	(i) $\left[\mathrm{ML}^2\mathrm{T}^{-1}\right]$
(b) Torque	(ii) $\left[\mathrm{ML}^2\mathrm{T}^{-2}\right]$
(c) Stress	(iii) $\left[\mathrm{ML}^{-1}\mathrm{T}^{-2}\right]$
(d) Pressure gradient	(iv) $\left[\mathrm{ML}^{-2}\mathrm{T}^{-2}\right]$

Choose the correct answer from the options given below:

A. A - III, B - I, C - IV, D - II

B. A - II, B - III, C - IV, D - I

C. A - IV, B - II, C - I, D - III

D. A - I, B - IV, C - III, D - II

Correct answer: A

Source solution

Angular momentum:

$$L = mvr$$

$$[L] = [M]\,[LT^{-1}]\,[L] = ML^2T^{-1}.$$

Torque:

$$\tau = rF$$

$$[\tau] = [L]\,[MLT^{-2}] = ML^2T^{-2}.$$

Stress:

$$\text{Stress} = \frac{F}{A}$$

$$[\text{Stress}] = \frac{MLT^{-2}}{L^2} = ML^{-1}T^{-2}.$$

Pressure gradient:

$$\frac{dP}{dx}$$

$$\left[\frac{dP}{dx}\right] = \frac{[P]}{[L]} = \frac{ML^{-1}T^{-2}}{L} = ML^{-2}T^{-2}.$$

$$\boxed{\begin{aligned} &= ML^2T^{-1}, \\ [\tau] &= ML^2T^{-2}, \\ [\text{Stress}] &= ML^{-1}T^{-2}, \\ \left[\frac{dP}{dx}\right] &= ML^{-2}T^{-2}. \end{aligned}}$$

Mechanical Properties of Fluids

Questions 91-92 / 2 selected / 0.7% practice weight / Consolidate

Question 91

In the given figure, the face AC of the equilateral prism is immersed in a liquid of refractive index ' n '. For incident angle 60° at the side AC, the refracted light beam just grazes along face AC. The refractive index of the liquid $\mathbf{n} = \frac{\sqrt{x}}{4}$. The value of x is .
(Given refractive index of glass $= 1.5$)

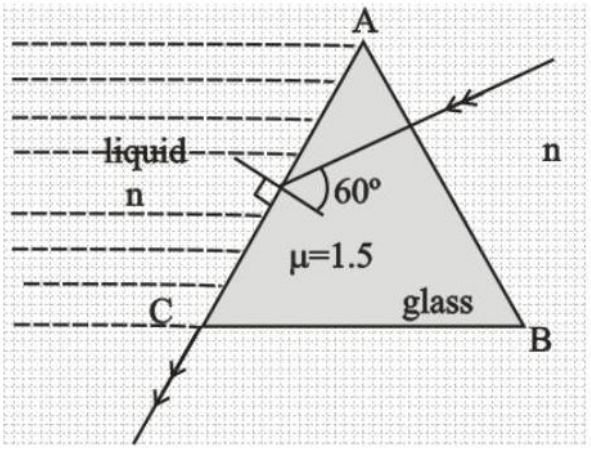

Numerical answer: _____

Enter the requested value (an integer; 0 decimal places). Use the units and scaling stated in the question.

Correct answer: 27

Source solution

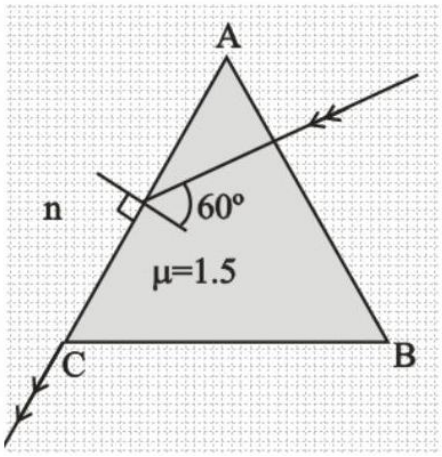

Using snell's law at face AC

$1.5 \sin 60^\circ = \mathrm{n} \times \sin 90^\circ$

$1.5 \times \frac{\sqrt{3}}{2} = \mathrm{n} = \frac{\sqrt{\mathrm{x}}}{4}$

$3\sqrt{3} = \sqrt{x}$

$\mathrm{x} = 27$

Question 92

Match List-I with List-II.

List-I	List-II
(a) Torque	(i) ML^2T^{-2}
(b) Stress	(ii) $ML^{-1}T^{-2}$
(c) Pressure gradient	(iii) $ML^{-2}T^{-2}$
(d) Coefficient of viscosity	(iv) $ML^{-1}T^{-1}$

Choose the correct answer from the options given below:

A. A-III, B-IV, C-I, D-II

B. A-IV, B-II, C-III, D-I

C. A-II, B-IV, C-I, D-III

D. A-II, B-I, C-IV, D-III

Correct answer: C

Source solution

(a) Torque

$$\tau = r \times F$$

$$[\tau] = [L]\,[MLT^{-2}] = ML^2T^{-2}$$

$$\boxed{(a) \rightarrow (i)}$$

(b) Stress

$$\text{Stress} = \frac{\text{Force}}{\text{Area}}$$

$$[\text{Stress}] = \frac{MLT^{-2}}{L^2} = ML^{-1}T^{-2}$$

$$\boxed{(b) \rightarrow (ii)}$$

(c) Pressure Gradient

$$\frac{dP}{dx}$$

Since

$$[P] = \frac{MLT^{-2}}{L^2} = ML^{-1}T^{-2},$$

$$\left[\frac{dP}{dx}\right] = \frac{ML^{-1}T^{-2}}{L} = ML^{-2}T^{-2}$$

$$\boxed{(c) \rightarrow (iii)}$$

(d) Coefficient of Viscosity

Using

$$F = \eta A \frac{dv}{dx},$$

$$[\eta] = \frac{[F]}{[A]\,[dv/dx]} = \frac{MLT^{-2}}{L^2\,T^{-1}} = ML^{-1}T^{-1}$$

$$\boxed{(d) \rightarrow (iv)}$$

Therefore,

$$\boxed{(a) \rightarrow (i), \quad (b) \rightarrow (ii), \quad (c) \rightarrow (iii), \quad (d) \rightarrow (iv)}$$

Thermal Properties of Matter

Question 93

A thin rod having a length of 1 m and area of cross-section $3 \times 10^{-6}\ \mathrm{m}^2$ is suspended vertically from one end. The rod is cooled from $210^{\circ}\mathrm{C}$ to $160^{\circ}\mathrm{C}$. After cooling, a mass M is attached at the lower end of the rod such that the length of rod again becomes 1 m . Young's modulus and coefficient of linear expansion of the rod are $2 \times 10^{11}\ \mathrm{N\,m^{-2}}$ and $2 \times 10^{-5}\ \mathrm{K^{-1}}$, respectively. The value of M is kg. (Take $\mathrm{g} = 10\ \mathrm{m\,s^{-2}}$)

Numerical answer: _____

Enter the requested value (an integer; 0 decimal places). Use the units and scaling stated in the question.

Correct answer: 60

Source solution

(60)

$\mathrm{Y} = \frac{FL}{A\Delta L}$

$\mathrm{F} = YA\left(\frac{\Delta L}{L}\right)$

$\mathrm{F} = YA(\alpha\Delta T)$

$\mathrm{Mg} = YA(\alpha\Delta T)$

$\mathrm{M} \times 10 = 2 \times 10^{11} \times 3 \times 10^{-6} \times 2 \times 10^{-5} \times 50$

$\mathrm{M} = 60\ \mathrm{kg}$

Question 94

Two moles a monoatomic gas is mixed with six moles of a diatomic gas. The molar specific heat of the mixture at constant volume is :

A. $\frac{9}{4}R$

B. $\frac{7}{4}R$

C. $\frac{3}{2}R$

D. $\frac{5}{2}\mathrm{R}$

Correct answer: A

Source solution

$$C_v = \frac{n_1 C_{v1} + n_2 C_{v2}}{n_1 + n_2}$$

$$C_v = \frac{2\left(\frac{3}{2}R\right) + 6\left(\frac{5}{2}R\right)}{2+6}$$

$$C_v = \frac{3R + 15R}{8}$$

$$C_v = \frac{18R}{8}$$

$$\boxed{C_v = \frac{9}{4}R}$$

Question 95

Pressure of an ideal gas, contained in a closed vessel, is increased by 0.4% when heated by $1^{\circ}\mathrm{C}$. Its initial temperature must be :

A. $25^{\circ}\mathrm{C}$

B. 2500 K

C. 250 K

D. $250^{\circ}\mathrm{C}$

Correct answer: C

Source solution

Sol. Isochoric process $\mathrm{P} \propto \mathrm{T}$

$$\frac{\Delta \mathrm{P}}{\mathrm{P}}=\frac{\Delta \mathrm{T}}{\mathrm{T}}$$

$$\frac{0.4}{100}=\frac{1}{\mathrm{T}}$$

$$\mathrm{T}=250\,\mathrm{K}$$

Question 96

When a gas filled in a closed vessel is heated by raising the temperature by $1^{\circ}C$, its pressure increase by 0.4%. The initial temperature of the gas is K.

Numerical answer: _____

Enter the requested value (an integer; 0 decimal places). Use the units and scaling stated in the question.

Correct answer: 250

Source solution

$$pV = nRT$$
$$\Delta P.V = nR\Delta T$$
$$\Rightarrow \quad \frac{\Delta P}{P} = \frac{\Delta T}{T} = \frac{0.4}{100}$$
$$\Rightarrow \quad T = \frac{100 \times 1}{0.4} = 250\ K$$

Question 97

For an ideal gas the instantaneous change in pressure ' p ' with volume ' v ' is given by the equation $\frac{dp}{dv} = -ap$. If $p = p_0$ at $v = 0$ is the given boundary condition, then the maximum temperature one mole of gas can attain is :(Here R is the gas constant)

A. $\frac{p_0}{aeR}$

B. $\frac{ap_0}{eR}$

C. infinity

D. $0°C$

Correct answer: A

Source solution

Sol.

$$\int_{p_0}^{p} \frac{dp}{P} = -a\int_{0}^{v} dv$$

$$\ln\left(\frac{p}{p_0}\right) = -av$$

$$p = p_0 e^{-av}$$

For temperature maximum p-v product should be maximum

$$T = \frac{pv}{nR} = \frac{p_0 v e^{-av}}{R}$$

$$\frac{dT}{dv} = 0 \Rightarrow \frac{p_0}{R}\{e^{-av} + ve^{-av}(-a)\}$$

$$\frac{p_0 e^{-av}}{R}\{1 - av\} = 0$$

$v = \frac{1}{a}, \infty$

$$T = \frac{p_0 \cdot 1}{Rae} = \frac{p_0}{Rae} \quad \text{at } v = \infty$$

Question 98

The specific heat at constant pressure of a real gas obeying $\mathbf{PV^2 = RT}$ equation is :

A. $\mathbf{C_V + R}$

B. $\frac{R}{3} + C_V$

C. R

D. $C_V + \frac{R}{2V}$

Correct answer: D

Source solution

Sol. $dQ = du + dW$

$$C\,dT = C_V\,dT + P\,dV \quad (1)$$

$$\therefore \quad P^2 = RT$$

$$P = \text{constant}$$

$$P(2V\,dV) = R\,dT$$

$$P\,dV = \frac{R\,dT}{2V}$$

Put in equation (1)

$$C = C_V + \frac{R}{2V}$$

Thermodynamics

Questions 99-111 / 13 selected / 4.3% practice weight / Focus first

Question 99

Two thermodynamical process are shown in the figure. The molar heat capacity for process A and B are C_A and C_B. The molar heat capacity at constant pressure and constant volume are represented by $\mathbf{C_P}$ and $\mathbf{C_V}$, respectively. Choose the correct statement.

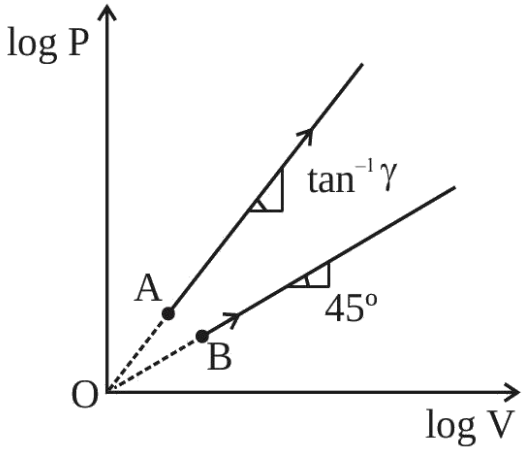

A. $C_B = \infty, C_A = 0$

B. $C_A = 0$ and $C_B = \infty$

C. $C_P > C_B > C_A > C_V$

D. $C_A > C_P > C_V$

Correct answer: C

Source solution

$$\textbf{For process A,}$$

Given

$$\log P = \gamma \log V,$$

we have

$$P = V^{\gamma}, \qquad (\gamma > 1).$$

Hence,

$$PV^{-\gamma} = \textbf{constant}.$$

For a polytropic process $PV^{n} = \textbf{constant}$, the molar heat capacity is

$$C = C_V + \frac{R}{1-n}.$$

Here, $n = -\gamma$. Therefore,

$$C_A = C_V + \frac{R}{1+\gamma}. \tag{i}$$

Similarly, for process B,

$$P \propto V$$

or

$$PV^{-1} = \textbf{constant}.$$

Thus,

$$n = -1,$$

and

$$C_B = C_V + \frac{R}{1-(-1)} = C_V + \frac{R}{2}. \tag{ii}$$

Also,

$$C_P = C_V + R. \tag{iii}$$

Since $\gamma > 1$,

$$\frac{R}{2} > \frac{R}{1+\gamma} > 0.$$

Therefore,

$$C_P = C_V + R > C_V + \frac{R}{2} > C_V + \frac{R}{1+\gamma} > C_V.$$

Hence,

$$\boxed{C_P > C_B > C_A > C_V}.$$

Question 100

A sample of gas with $\gamma = 1.5$ is taken through an adiabatic process in which the volume is compressed from $1200\ \mathrm{cm}^3$ to $300\ \mathrm{cm}^3$. If the initial pressure is 200 kPa . The absolute value of the workdone by the gas in the process = J.

Numerical answer: _____

Enter the requested value (an integer; 0 decimal places). Use the units and scaling stated in the question.

Correct answer: 480

Source solution

$v = 1.5$

$\mathrm{p_1\ V_1^{\gamma} = p_2\ V_2^{\gamma}}$

$(200)\ (1200)^{1.5} = \mathrm{P^2}(300)^{1.5}$

$\mathrm{P_2} = 200[4]^{3/2} = 1600\mathrm{kPa}$

$|\ \mathrm{W.D.}\ | = \frac{p_2 v_2 - p_1 v_1}{v-1} = \left(\frac{480-240}{0.5}\right) = 480\ \mathrm{J}$

Question 101

A diatomic gas $(\gamma = 1.4)$ does 200 J of work when it is expanded isobarically. The heat given to the gas in the process is :

A. 850 J

B. 800 J

C. 600 J

D. 700 J

Correct answer: D

Source solution

$$\gamma = 1 + \frac{2}{f}.$$

Given,

$$\gamma = 1.4.$$

Therefore,

$$1.4 = 1 + \frac{2}{f}$$

$$\frac{2}{f} = 0.4$$

$$f = 5.$$

For an ideal gas,

$$C_P = \left(\frac{f+2}{2}\right)R.$$

Substituting $f = 5$,

$$C_P = \frac{7}{2}R.$$

Given that

$$nR\Delta T = 200\,\text{J},$$

the heat supplied at constant pressure is

$$Q = nC_P\Delta T.$$

Hence,

$$Q = \left(\frac{7}{2}\right)nR\Delta T = \left(\frac{7}{2}\right)(200).$$

$$Q = 700\,\text{J}.$$

Therefore,

$$\boxed{Q = 700\,\text{J}}.$$

Question 102

Match List-I with List-II.

List-I	List-II
(a) Isothermal	(i) Pressure constant
(b) Isochoric	(ii) Temperature constant
(c) Adiabatic	(iii) Volume constant
(d) Isobaric	(iv) Heat content is constant

Choose the correct answer from the options given below:

A. (a) - (ii), (b) - (iv), (c) - (iii), (d) - (i)

B. (a) - (ii), (b) - (iii), (c) - (iv), (d) - (i)

C. (a) - (i), (b) - (iii), (c) - (ii), (d) - (iv)

D. (a) - (iii), (b) - (ii), (c) - (i), (d) - (iv)

Correct answer: B

Source solution

The meanings of the thermodynamic processes are:

$$\begin{aligned} \text{Isothermal} &\Rightarrow \text{Temperature remains constant,} \\ \text{Isochoric} &\Rightarrow \text{Volume remains constant,} \\ \text{Adiabatic} &\Rightarrow \text{No heat is exchanged with the surroundings,} \\ \text{Isobaric} &\Rightarrow \text{Pressure remains constant.} \end{aligned}$$

Therefore, the correct matching is

$$\begin{aligned} \text{(a) Isothermal} &\longrightarrow \text{(ii) Temperature constant,} \\ \text{(b) Isochoric} &\longrightarrow \text{(iii) Volume constant,} \\ \text{(c) Adiabatic} &\longrightarrow \text{(iv) No heat exchange,} \\ \text{(d) Isobaric} &\longrightarrow \text{(i) Pressure constant.} \end{aligned}$$

Hence,

$$\boxed{(a) \rightarrow (ii), \quad (b) \rightarrow (iii), \quad (c) \rightarrow (iv), \quad (d) \rightarrow (i)}$$

Question 103

Match List-I with List-II.

List-I	List-II
(a) Isothermal Process	(i) No change in internal energy
(b) Adiabatic Process	(ii) Work done by the gas decreases internal energy
(c) Isochoric Process	(iii) No work is done on or by the gas
(d) Isobaric Process	(iv) The heat absorbed goes partly to increase internal energy and partly to do work

Choose the correct answer from the options given below:

A. A-I, B-II, C-III, D-IV

B. A-II, B-I, C-IV, D-III

C. A-II, B-I, C-III, D-IV

D. A-I, B-II, C-IV, D-III

Correct answer: B

Source solution

For an isothermal process,

$$T = \text{constant}.$$

For an ideal gas, the internal energy depends only on temperature. Hence,

$$\Delta U = 0.$$

By the first law of thermodynamics,

$$Q = W.$$

Thus, the heat absorbed is completely converted into work.

$$\textbf{(a) Isothermal Process} \longrightarrow \textbf{(ii)}$$

For an adiabatic process,

$$Q = 0.$$

Hence,

$$\Delta U = -W.$$

Therefore, work done by the gas decreases its internal energy.

$$\textbf{(b) Adiabatic Process} \longrightarrow \textbf{(i)}$$

For an isochoric process,

$$\Delta V = 0.$$

Therefore,

$$W = \int P\,dV = 0.$$

All the heat supplied is used to increase the internal energy.

$$\textbf{(c) Isochoric Process} \longrightarrow \textbf{(iv)}$$

For an isobaric process,

$$P = \text{constant.}$$

The gas expands against a constant pressure and work is done during the process.

$$\text{(d) Isobaric Process} \longrightarrow \text{(iii)}$$

Hence, the correct matching is

$$\boxed{A-II,\quad B-I,\quad C-IV,\quad D-III}$$

Question 104

Match List-I with List-II.

List-I	List-II
(A) Pressure varies inversely with volume of an ideal gas	(III) Isothermal process
(B) Heat absorbed goes partly to increase internal energy and partly to do work	(IV) Isobaric process
(C) Heat is neither absorbed nor released by a system	(I) Adiabatic process
(D) No work is done on or by a gas	(II) Isochoric process

Choose the correct answer from the options given below:

A. A-I, B-IV, C-II, D-III

B. A-III, B-I, C-IV, D-II

C. A-I, B-III, C-II, D-IV

D. A-III, B-IV, C-I, D-II

Correct answer: D

Source solution

\textbf{(A) Pressure varies inversely with volume of an ideal gas}

For an ideal gas undergoing an isothermal process,

$$PV = \text{constant}.$$

Hence,

$$P \propto \frac{1}{V}.$$

Therefore,

$$(A) \rightarrow (III).$$

\textbf{(B) Heat absorbed goes partly to increase internal energy and partly to do work}

In an isobaric process,

$$\Delta Q = \Delta U + P\Delta V.$$

Thus, the heat supplied is used partly to increase internal energy and partly to perform work.

$$(B) \to (IV).$$

\textbf{(C) Heat is neither absorbed nor released by a system}

For an adiabatic process,

$$\Delta Q = 0.$$

Hence,

$$(C) \to (I).$$

\textbf{(D) No work is done on or by a gas}

For an isochoric process,

$$\Delta V = 0.$$

Therefore,

$$W = \int P\,dV = 0.$$

Hence,

$$(D) \rightarrow (II).$$

Thus, the correct matching is

$$\boxed{A \rightarrow III, \quad B \rightarrow IV, \quad C \rightarrow I, \quad D \rightarrow II}$$

Question 105

Match List I with List II

LIST I		LIST II	
A.	Isothermal Process	I.	Work done by the gas decreases internal energy
B.	Adiabatic Process	II.	No change in internal energy
C.	Isochoric Process	III.	The heat absorbed goes partly to increase internal energy and partly to do work
D.	Isobaric Process	IV.	No work is done on or by the gas

Choose the correct answer from the options given below:

A. A-I, B-II, C-III, D-IV

B. A-II, B-I, C-IV, D-III

C. A-II, B-I, C-III, D-IV

D. A-I, B-II, C-IV, D-III

Correct answer: B

Source solution

By theory

Isonormal $\rightarrow \mathbf{\Delta u = 0}$ $\quad \mathbf{A} \rightarrow$ II
Adiabatic $\rightarrow \mathbf{\Delta Q = O, \Delta w(+)}$ so $\mathbf{\Delta u(-) \downarrow B \rightarrow I}$
Isochoric $= \mathbf{\Delta V = 0}$
$\mathbf{\Delta V = 0 \rightarrow \Delta w = 0}$
$\mathbf{C} \rightarrow$ IV
Isobasic $\rightarrow \mathbf{P\Delta u \neq O}$
$\mathbf{\Delta v \neq 0}$
D $\rightarrow$ III

Question 106

Match List-I with List-II.

List-I	List-II
(A) Isothermal	(IV) $\Delta U = 0$
(B) Adiabatic	(II) $\Delta Q = 0$
(C) Isobaric	(III) $\Delta U \neq 0$
(D) Isochoric	(I) $\Delta W = 0$

Choose the correct answer from the options given below:

A. (A)-(III), (B)-(II), (C)-(I), (D)-(IV)

B. (A)-(IV), (B)-(I), (C)-(III), (D)-(II)

C. (A)-(IV), (B)-(II), (C)-(III), (D)-(I)

D. (A)-(II), (B)-(IV), (C)-(I), (D)-(III)

Correct answer: C

Source solution

\textbf{(A) Isothermal Process}

For an ideal gas undergoing an isothermal process,

$$\Delta T = 0.$$

Since internal energy depends only on temperature,

$$\Delta U = 0.$$

Hence,

$$(A) \rightarrow (IV).$$

\textbf{(B) Adiabatic Process}

For an adiabatic process,

$$\Delta Q = 0.$$

Hence,

$$(B) \rightarrow (II).$$

\textbf{(C) Isobaric Process}

For an isobaric process,

$$P = \text{constant}.$$

In general, the temperature changes, therefore

$$\Delta U = nC_V \Delta T \neq 0.$$

Hence,

$$(C) \rightarrow (III).$$

\textbf{(D) Isochoric Process}

For an isochoric process,

$$\Delta V = 0.$$

Therefore,

$$\Delta W = \int P\,dV = 0.$$

Hence,

$$(D) \rightarrow (I).$$

Thus, the correct matching is

$$\boxed{A \rightarrow IV, \quad B \rightarrow II, \quad C \rightarrow III, \quad D \rightarrow I}$$

Question 107

Match List-I with List-II.

List-I	List-II
(A) Isobaric	(IV) $\Delta Q = \Delta U + P\Delta V$
(B) Isochoric	(II) $\Delta Q = \Delta U$
(C) Adiabatic	(III) $\Delta Q = 0$
(D) Isothermal	(I) $\Delta Q = \Delta W$

Where: ΔQ = Heat supplied, ΔW = Work done by the system, ΔU = Change in internal energy, P = Pressure of the system, ΔV = Change in volume of the system.

Choose the correct answer from the options given below:

A. (A)-(IV), (B)-(III), (C)-(II), (D)-(I)

B. (A)-(IV), (B)-(I), (C)-(III), (D)-(II)

C. (A)-(IV), (B)-(II), (C)-(III), (D)-(I)

D. (A)-(II), (B)-(IV), (C)-(III), (D)-(I)

Correct answer: C

Source solution

\textbf{(A) Isobaric Process}

For an isobaric process,

$$W = P\Delta V.$$

Using the first law of thermodynamics,

$$\Delta Q = \Delta U + \Delta W = \Delta U + P\Delta V.$$

Hence,

$$(A) \rightarrow (IV).$$

\textbf{(B) Isochoric Process}

For an isochoric process,

$$\Delta V = 0.$$

Therefore,

$$W = 0.$$

Thus,

$$\Delta Q = \Delta U.$$

Hence,

$$(B) \rightarrow (II).$$

\textbf{(C) Adiabatic Process}

For an adiabatic process,

$$\Delta Q = 0.$$

Hence,

$$(C) \rightarrow (III).$$

\textbf{(D) Isothermal Process}

For an ideal gas in an isothermal process,

$$\Delta U = 0.$$

Therefore,

$$\Delta Q = \Delta W.$$

Hence,

$$(D) \rightarrow (I).$$

Therefore, the correct matching is

$$\boxed{A \rightarrow IV, \quad B \rightarrow II, \quad C \rightarrow III, \quad D \rightarrow I}$$

Question 108

The initial pressure and volume of an ideal gas are $\mathbf{P_0}$ and $\mathbf{V_0}$. The final pressure of the gas when the gas is suddenly compressed to volume $\frac{\mathbf{V_0}}{\mathbf{4}}$ will be : (Given $\boldsymbol{\gamma}$ = ratio of specific heats at constant pressure and at constant volume)Option :}

A. $\mathbf{P_0(4)^{\frac{1}{\gamma}}}$

B. $\mathbf{P_0(4)^{\gamma}}$

C. $\mathbf{P_0}$

D. $\mathbf{4P_0}$

Correct answer: B

Source solution

Since the gas is compressed suddenly, the process is adiabatic.

For an adiabatic process,

$$PV^{\gamma} = \text{constant}.$$

Therefore,

$$P_1V_1^{\gamma} = P_2V_2^{\gamma}.$$

Substituting

$$P_1 = P_0, \qquad V_1 = V_0, \qquad V_2 = \frac{V_0}{4},$$

we get

$$P_0V_0^{\gamma} = P_2\left(\frac{V_0}{4}\right)^{\gamma}.$$

Hence,

$$P_2 = P_0 \frac{V_0^{\gamma}}{\left(\frac{V_0}{4}\right)^{\gamma}} = P_0\, 4^{\gamma}.$$

Therefore,

$$\boxed{P_2 = P_0\, 4^{\gamma}}.$$

Question 109

An ideal gas goes from an initial state to final state. During the process, the pressure of gas increases linearly with temperature (A) The work done by gas during the process is zero. (B) The heat added to gas is different from change in its internal energy (C) The volume of the gas is increased (D) The internal energy of the gas is increased (E) The process is isochoric (constant volume process)Choose the correct answer from the options given below :-

A. A, B, C, D Only

B. A, D, E Only

C. E Only

D. A, C Only

Correct answer: B

Source solution

Given that the pressure increases linearly with temperature,

$$P \propto T.$$

Using the ideal gas equation,

$$PV = nRT.$$

::contentReference[oaicite:0]{index=0}

Since

$$\frac{P}{T} = \text{constant},$$

from

$$PV = nRT,$$

we get

$$V = \frac{nR}{P/T} = \textbf{constant.}$$

Hence, the process is isochoric.

$$\boxed{\textbf{(E) is correct.}}$$

Since the volume remains constant,

$$W = \int P\,dV = 0.$$

Therefore,

$$\boxed{\textbf{(A) is correct.}}$$

As pressure increases linearly with temperature,

$$\textbf{T increases.}$$

For an ideal gas,

$$\Delta U = nC_V\Delta T.$$

Since $\Delta T > 0$,

$$\Delta U > 0.$$

Thus,

$$\boxed{\text{(D) is correct.}}$$

Also, for an isochoric process,

$$W = 0,$$

and by the first law,

$$Q = \Delta U.$$

Therefore, statement (B) is false.

Since the volume remains constant,

$$\boxed{\text{(C) is false.}}$$

Hence, the correct statements are

$$\boxed{\text{A, D and E.}}$$

Question 110

An ideal gas at an initial temperature $300K$ is compressed adiabatically ($\gamma = 1.4$) to its initial volume. The gas is then expanded isobarically to double its volume. Then the final temperature of the gas rounded off to nearest integer is.

Numerical answer: _____

Enter the requested value (an integer; 0 decimal places). Use the units and scaling stated in the question.

Correct answer: 1819

Source solution

(1819 K)

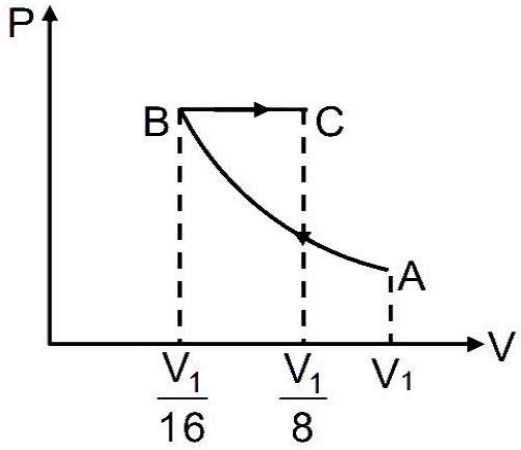

$PV^{\gamma} = \text{Constant}$
$TV^{(\gamma-1)} = \text{constant}$

$$300(V_1)^{(1.4-1)} = T_B\left(\frac{V_1}{16}\right)^{\frac{2}{5}}$$
$$T_B = 300 \times 2^{\left(\frac{8}{5}\right)}$$

Now for BC process

$$\frac{V_B}{T_B} = \frac{V_C}{T_C}$$

$$T_C = \frac{V_C T_B}{T_B} = 2 \times 300 \times 2^{\left(\frac{8}{5}\right)}$$
$$T_C = 1819\ \mathrm{K}$$

Question 111

Given below are two statements. One is labelled as Assertion (A) and the other is labelled as Reason (R).Assertion (A) : With the increase in the pressure of an ideal gas, the volume falls off more rapidly in an isothermal process in comparison to the adiabatic process.Reason (R) : In isothermal process, $\mathbf{PV} =$ constant, while in adiabatic process $\mathbf{PV}^{\gamma} =$ constant. Here γ is the ratio of specific heats, P is the pressure and V is the volume of the ideal gas.In the light of the above statements, choose the correct answer from the options given below :

A. Both (A) and (R) are true but (R) is NOT the correct explanation of (A)

B. (A) is true but (R) is false

C. Both (A) and (R) are true and (R) is the correct explanation of (A).

D. (A) is false but (R) is true

Correct answer: C

Source solution

$$\textbf{Assertion (A):}$$

For an isothermal process,

$$PV = \text{constant}$$

or

$$V \propto \frac{1}{P}.$$

For an adiabatic process,

$$PV^{\gamma} = \text{constant},$$

so that

$$V \propto P^{-1/\gamma}.$$

Since

$$\gamma > 1,$$

we have

$$\frac{1}{\gamma} < 1.$$

Therefore, as pressure increases,

$$P^{-1}$$

decreases more rapidly than

$$P^{-1/\gamma}.$$

Hence, the volume decreases more rapidly in an isothermal process than in an adiabatic process.

$$\boxed{\text{Assertion (A) is true.}}$$

$$\text{Reason (R):}$$

For an isothermal process,

$$PV = \text{constant},$$

while for an adiabatic process,

$$PV^{\gamma} = \text{constant}.$$

Reason (R) is true.

The reason correctly explains why the volume falls more rapidly with pressure in the isothermal case than in the adiabatic case.

Therefore,

Both A and R are true, and R is the correct explanation of A.

Kinetic Theory

Question 112

A gas mixture consists of 8 moles of argon and 6 moles of oxygen at temperature T. Neglecting all vibrational modes, the total internal energy of the system is

A. 29 RT

B. 20 RT

C. 27 RT

D. 21 RT

Correct answer: C

Source solution

$$U = nC_VT$$

For the mixture,

$$U = n_1C_{V_1}T + n_2C_{V_2}T$$

$$= 8\left(\frac{3R}{2}\right)T + 6\left(\frac{5R}{2}\right)T$$

$$= \frac{24RT}{2} + \frac{30RT}{2}$$

$$= 12RT + 15RT$$

$$= 27RT$$

$$\boxed{U = 27RT}$$

Question 113

The volume V of an enclosure contains a mixture of three gases, 16 g of oxygen, 28 g of nitrogen and 44 g of carbon dioxide at absolute temperature T. Consider R as universal gas constant. The pressure of the mixture of gases is :

A. $\frac{88RT}{V}$

B. $\frac{3RT}{V}$

C. $\frac{5}{2}\frac{\mathrm{RT}}{\mathrm{V}}$

D. $\frac{4RT}{V}$

Correct answer: C

Source solution

Sol. $\mathrm{PV} = (n_1 + n_2 + n_3)\mathrm{RT}$

$$P \cdot V = \left[\frac{16}{32} + \frac{28}{28} + \frac{44}{44}\right] RT$$

$\mathrm{PV} = \left[\frac{1}{2} + 1 + 1\right]\mathrm{RT}$

$$\mathrm{P} = \frac{5}{2} \cdot \frac{\mathrm{RT}}{V}$$

Question 114

The average translational kinetic energy of $\mathbf{N_2}$ gas molecules at ___ °C becomes equal to the K.E. of an electron accelerated from rest through a potential difference of 0.1 volt. (Given $\mathbf{k_B = 1.38 \times 10^{-23}\ J/K}$) (Fill the nearest integer).

Numerical answer: _____

Enter the requested integer (0 decimal places).

Correct answer: 500

Source solution

Given Translation K.E. of $\mathbf{N_2}$ = K.E. of electron

$$\frac{3}{2}\mathbf{kT = eV}$$

$$\frac{3}{2} \times 1.38 \times 10^{-23}\ \mathbf{T} = 1.6 \times 10^{-19} \times 0.1$$

$$\Rightarrow\ \mathbf{T = 773k}$$

$$\mathbf{T = 773 - 273 = 500^{\circ}C}$$

Question 115

If one mole of the polyatomic gas is having two vibrational modes and β is the ratio of molar specific heats for polyatomic gas $\left(\beta = \frac{C_P}{C_V}\right)$ then the value of β is :

A. 1.02

B. 1.2

C. 1.25

D. 1.35

Correct answer: B

Source solution

Sol. (2) $f = 4 + 3 + 3 = 10$ assuming non-linear

$$\beta = \frac{C_p}{C_v} = 1 + \frac{2}{f} = \frac{12}{10} = 1.2$$

Question 116

Match List-I with List-II.

List-I	List-II
(A) Heat capacity of body	(II) $\mathrm{J\,K^{-1}}$
(B) Specific heat capacity of body	(III) $\mathrm{J\,kg^{-1}\,K^{-1}}$
(C) Latent heat	(I) $\mathrm{J\,kg^{-1}}$
(D) Thermal conductivity	(IV) $\mathrm{J\,m^{-1}\,K^{-1}\,s^{-1}}$

Choose the correct answer from the options given below:

A. (A)-(III), (B)-(I), (C)-(II), (D)-(IV)

B. (A)-(IV), (B)-(III), (C)-(II), (D)-(I)

C. (A)-(III), (B)-(IV), (C)-(I), (D)-(II)

D. (A)-(II), (B)-(III), (C)-(I), (D)-(IV)

Correct answer: D

Source solution

Sol.

$$\text{Heat Capacity} = \frac{\text{Heat supplied}}{\text{Rise in temperature}}$$

Unit:

$$\boxed{\mathrm{J\,K^{-1}}}$$

$$A \rightarrow II$$

$$\text{Specific Heat Capacity} = \frac{\text{Heat supplied}}{\text{Mass} \times \text{Rise in temperature}}$$

Unit:

$$\boxed{\mathrm{J\,kg^{-1}\,K^{-1}}}$$

$$B \to III$$

$$\text{Latent Heat} = \frac{\text{Heat supplied}}{\text{Mass}}$$

Unit:

$$\boxed{\mathrm{J\,kg^{-1}}}$$

$$C \to I$$

Thermal Conductivity

Unit:

$$\boxed{\mathrm{J\,m^{-1}\,K^{-1}\,s^{-1}}}$$

$$D \to IV$$

Therefore,

$$\boxed{A \to II, \quad B \to III, \quad C \to I, \quad D \to IV}$$

Question 117

The internal energy (U), pressure (P) and volume (V) of an ideal gas are related as $U = 3PV + 4$. The gas is:

A. polyatomic only

B. monoatomic only

C. either monoatomic or diatomic

D. diatomic only.

Correct answer: A

Source solution

$$\mathrm{U} = 3\mathrm{PV} + 4$$

$$\frac{f}{2}\mathrm{PV} = 3\mathrm{PV} + 4$$

$$\therefore \mathrm{u} = \frac{f}{2}\mathrm{nRT}$$

$$f = 6 + \frac{8}{\mathrm{PV}}$$

$$\therefore \mathrm{PV} = \mathrm{nRT}$$

$$f > 6 \therefore \text{Polyatomic gas.}$$

Oscillations

Question 118

A cylindrical block of mass M and area of cross section A is floating in a liquid of density ρ and with its axis vertical. When depressed a little and released the block starts oscillating. The period of oscillation is _____.

A. $2\pi\sqrt{\frac{M}{\rho Ag}}$

B. $\pi\sqrt{\frac{2M}{\rho Ag}}$

C. $\pi\sqrt{\frac{\rho A}{Mg}}$

D. $2\pi\sqrt{\frac{\rho A}{Mg}}$

Correct answer: A

Source solution

At equilibrium

$$\rho Ahg = Mg$$

After displacing by x,

$$\begin{aligned} Ma &= -\rho A(h+x)g + Mg \\ Ma &= -\rho Ahg - \rho Axg + Mg \\ Ma &= -\rho Axg \\ a &= \left(\frac{-\rho Ag}{M}\right)x \end{aligned}$$

on comparing with,

$$\begin{aligned} a &= -\omega^2 x \\ \omega &= \sqrt{\frac{\rho Ag}{M}} \\ T &= \frac{2\pi}{\omega} = 2\pi\sqrt{\frac{M}{\rho Ag}} \end{aligned}$$

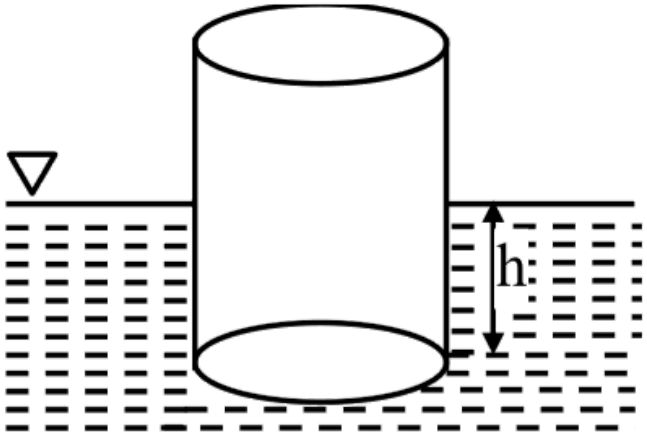
h

Question 119

A rod of mass ' M ' and length ' 2 L ' is suspended at its middle by a wire. It exhibits torsional oscillations; If two masses each of ' m ' are attached at distance ' $\mathbf{L/2}$ ' from its centre on both sides, it reduces the oscillation frequency by $\mathbf{20\%}$. The value of ratio $\mathbf{m/M}$ is close to :

A. 0.17

B. 0.37

C. 0.57

D. 0.77

Correct answer: B

Source solution

Sol. Frequency of torsional oscillations is given by

$$f = \frac{k}{\sqrt{I}}$$

$$f_1 = \frac{k}{\sqrt{\frac{M(2L)^2}{12}}}$$

$$f_2 = \frac{k}{\sqrt{\frac{M(2L)^2}{12} + 2m\left(\frac{L}{2}\right)^2}}$$

$$f_2 = 0.8 f_1$$

$$\frac{m}{M} = 0.375$$

Question 120

The point A moves with a uniform speed along the circumference of a circle of radius 0.36 m and cover $30°$ in 0.1 s . The perpendicular projection ' P ' form ' A ' on the diameter MN represents the simple harmonic motion of ' P '. The restoration force per unit mass when P touches M will be:

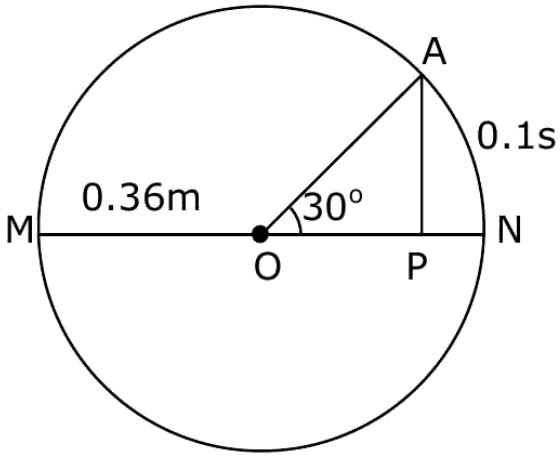

A. 100 N

B. 50 N

C. 9.87 N

D. 0.49 N

Correct answer: C

Source solution

Sol.

The point a covers $30°$ in $0.1\,\mathrm{s}$. This means

$$\frac{\pi}{6} \longrightarrow 0.1\,\mathrm{s}.$$

Thus,

$$1 \longrightarrow \frac{0.1}{\frac{\pi}{6}}.$$

For 2π, we have

$$2\pi \longrightarrow \frac{0.1 \times 6}{\pi} \times 2\pi.$$

This gives us

$$\mathrm{T} = 1.2\,\mathrm{s}.$$

We know that

$$\omega = \frac{2\pi}{\mathrm{T}}.$$

Therefore,

$$\omega = \frac{2\pi}{1.2}.$$

The restoration force F is given by

$$F = m\omega^2 A.$$

Then, the restoration force per unit mass is

$$\left(\frac{F}{m}\right) = \omega^2 A.$$

Substituting the values, we have

$$\begin{aligned}\left(\frac{F}{m}\right) &= \left(\frac{2\pi}{1.2}\right)^2 \times 0.36 \\ &\cong 9.87\,\mathrm{N}.\end{aligned}$$

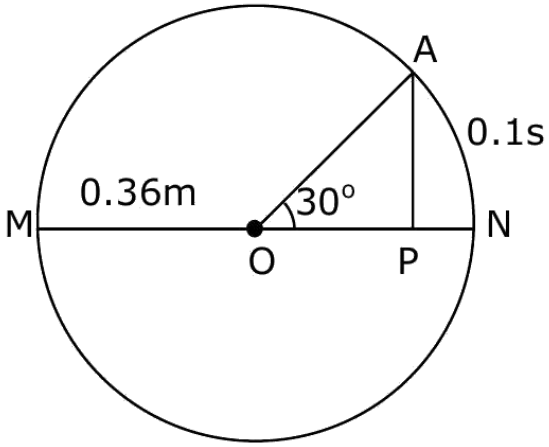
A
0.1s
0.36m
30°
M
N
O
P

Question 121

A block of mass 2 kg is attached to one end of a massless spring whose other end is fixed at a wall. The spring-mass system moves on a frictionless horizontal table. The spring's natural length is 2 m and spring constant is $200\ \mathrm{N/m}$. The block is pushed such that the length of the spring becomes 1 m and then released. At distance $\mathrm{xm}(\mathrm{x}<2)$ from the wall. the speed of the block will be :

A. $10[1-(2-\mathrm{x})]^{3/2}\ \mathrm{m/s}$

B. $10\left[1-(2-\mathrm{x})^2\right]^{1/2}\ \mathrm{m/s}$

C. $10\left[1-(2-x)^2\right]\mathrm{m/s}$

D. $10\left[1-(2-x)^2\right]^2\ \mathrm{m/s}$

Correct answer: B

Source solution

Sol.

Given,

$$m=2\ \mathrm{kg}, \qquad k=200\ \mathrm{N\ m^{-1}}.$$

Natural length of the spring

$$=2\ \mathrm{m}.$$

Initial compression,

$$x_i=1\ \mathrm{m}.$$

When the spring length becomes x, the compression is

$$x_f=(2-x)\ \mathrm{m}.$$

Using conservation of mechanical energy,

$$K_i + U_i = K_f + U_f.$$

Initially, the block is at rest:

$$K_i = 0.$$

Therefore,

$$0 + \frac{1}{2}kx_i^2 = \frac{1}{2}mv^2 + \frac{1}{2}kx_f^2.$$

Substituting the values,

$$\frac{1}{2}(200)(1)^2 = \frac{1}{2}(2)v^2 + \frac{1}{2}(200)(2-x)^2.$$

$$100 = v^2 + 100(2-x)^2.$$

Hence,

$$v^2 = 100\left[1 - (2-x)^2\right].$$

Therefore,

$$\boxed{v = 10\sqrt{1-(2-x)^2}}.$$

This gives the speed of the block when the spring length is x.

Question 122

A mass 0.9 kg , attached to a horizontal spring, executes SHM with an amplitude $\mathbf{A_1}$. When this mass passes through its mean position, then a smaller mass of 124 g is placed over it and both masses move together with amplitude $\mathbf{A_2}$. If the ratio $\frac{A_1}{A_2}$ is $\frac{\alpha}{\alpha-1}$, then the value of $\boldsymbol{\alpha}$ will be .

Numerical answer: _____

Enter the requested value (an integer; 0 decimal places). Use the units and scaling stated in the question.

Correct answer: 16

Source solution

$$\frac{1}{2}kA^2 = \frac{p^2}{2m}$$
$$\Rightarrow \left(\frac{A_1}{A_2}\right)^2 = \frac{m_2}{m_1} = \frac{1024}{900}$$
$$\Rightarrow \frac{A_1}{A_2} = \frac{32}{30} = \frac{16}{15} = \frac{16}{16-1}$$
$$\therefore \alpha = 16$$

Question 123

A mass of 5 kg is connected to a spring. The potential energy curve of the simple harmonic motion executed by the system is shown in the figure. A simple pendulum of length 4 m has the same period of oscillation as the spring system. What is the value of acceleration due to gravity on the planet where these experiments are performed?

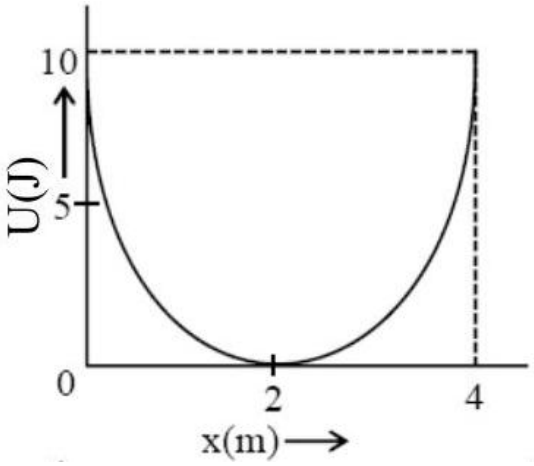

A. $10\ \mathrm{m/s^2}$

B. $5\ \mathrm{m/s^2}$

C. $4\ \mathrm{m/s^2}$

D. $9.8\ \mathrm{m/s^2}$

Correct answer: C

Source solution

From potential energy curve

$$\mathrm{U_{max}} = \frac{1}{2}\mathrm{kA^2} \Rightarrow 10 = \frac{1}{2}\mathrm{k}(2)^2$$
$$\Rightarrow \mathrm{k} = 5$$

Now $\mathrm{T_{spring}} = \mathrm{T_{pendulum}}$

$$2\pi\sqrt{\frac{5}{5}} = 2\pi\sqrt{\frac{4}{g}}$$
$$\Rightarrow 1 = \sqrt{\frac{4}{g}} \Rightarrow g = 4 \text{ on planet}$$

Question 124

A pendulum of length 2 m consists of a wooden bob of mass 50 g . A bullet of mass 75 g is fired towards the stationary bob with a speed v. The bullet emerges out of the bob with a speed $\frac{v}{3}$ and the bob just completes the vertical circle. The value of v is ms^{-1}. (if $\mathbf{g = 10\ m/s^2}$)

Numerical answer: _____

Enter the requested value (an integer; 0 decimal places). Use the units and scaling stated in the question.

Correct answer: 10

Source solution

Considering Only Horizontal direction

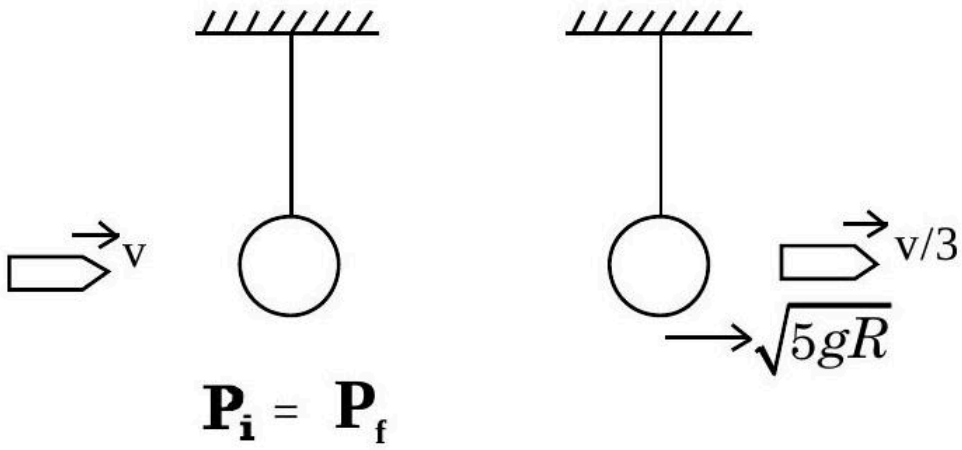

$(75v) + 0 = 50(\sqrt{5gR}) + 75\frac{v}{3}$
$75\left(v - \frac{v}{3}\right) = 50\sqrt{100}$
$v = 10\ \mathrm{m/s}$

Question 125

Displacement of a wave is expressed as $x(t) = 5\cos\left(628t + \frac{\pi}{2}\right)m$. The wavelength of the wave when its velocity is $300\ \mathrm{m/s}$ is :

A. 5 m

B. 3 m

C. 0.5 m

D. 0.33 m

Correct answer: B

Source solution

Sol.

The displacement of a particle is

$$x(t) = 5\cos\left(628t + \frac{\pi}{2}\right).$$

Comparing with the standard SHM equation

$$x = A\cos(\omega t + \phi),$$

we get

$$\omega = 628\ \mathrm{rad\ s^{-1}}.$$

The wave speed is given as

$$v_w = 300\ \mathrm{m\ s^{-1}}.$$

For a wave,

::contentReference[oaicite:0]{index=0}

$$v_w = \frac{\omega}{k}.$$

Hence,

$$300 = \frac{628}{k}$$

$$k = \frac{628}{300}.$$

Also,

$$k = \frac{2\pi}{\lambda}.$$

Therefore,

$$\frac{2\pi}{\lambda} = \frac{628}{300}.$$

$$\lambda = \frac{2\pi \times 300}{628}.$$

Using $\pi \approx 3.14$,

$$\lambda = \frac{2 \times 3.14 \times 300}{628} = 3\ \text{m}.$$

Since $628 \approx 200\pi$,

$$\lambda = \frac{2\pi \times 300}{200\pi} = 3\ \text{m}.$$

Hence,

$$\boxed{\lambda = 3\ \text{m}}.$$

Waves

Questions 126-133 / 8 selected / 2.7% practice weight / Next

Question 126

A fringe width of 6 mm was produced for two slits separated by 1 mm apart. The screen is placed 10 m away. The wavelength of light used is ' x ' nm . The value of ' x ' to the nearest integer is .

Numerical answer: _____

Enter the requested value (an integer; 0 decimal places). Use the units and scaling stated in the question.

Correct answer: 600

Source solution

$$\beta = \frac{\lambda D}{d}$$
$$\lambda = \frac{\beta d}{D}$$
$$\lambda = \frac{6\times10^{-3}\times10^{-3}}{10}$$
$$\lambda = 6 \times 10^{-7}\ \mathrm{m} = 600 \times 10^{-9}\ \mathrm{m}$$
$$\lambda = 600\ \mathrm{nm}$$

Question 127

The equation of wave is given by
$Y = 10^{-2} \sin 2\pi \left(160t - 0.5x + \frac{\pi}{4}\right)$
Where x and Y are in m and t in s. The speed of the wave is kmh^{-1}

Numerical answer: _____

Enter the requested value (an integer; 0 decimal places). Use the units and scaling stated in the question.

Correct answer: 1152

Source solution

$V = \frac{\omega}{k} = \frac{2\pi \times 60}{2\pi \times 0.5} = \frac{160}{0.5}\ \mathrm{m/s}$

$$= \frac{160}{0.5} \times \frac{18}{5}\ \mathrm{km/h}$$
$$= 1152\ \mathrm{km}$$

Question 128

In a Young's double slit experiment, an angular width of the fringe is 0.35° on a screen placed at 2 m away for particular wavelength of 450 nm . The angular width of the fringe, when whole system is immersed in a medium of refractive index $7/5$, is $\frac{1}{\alpha}$. The value of α is

Numerical answer: _____

Enter the requested value (an integer; 0 decimal places). Use the units and scaling stated in the question.

Correct answer: 4

Source solution

$\beta = \frac{0.35 \times 5}{7} = 0.25$
$\frac{1}{\alpha} = \frac{25}{100}$
$\alpha = 4$

Question 129

Sodium light of wavelengths 650 nm and 655 nm is used to study diffraction at a single slit of aperture 0.5 mm . The distance between the slit and the screen is 2.0 m . The separation between the positions of the first maxima of diffraction pattern obtained in the two cases is $\times 10^{-5}\ \mathrm{m}$.

Numerical answer: _____

Enter the requested value (an integer; 0 decimal places). Use the units and scaling stated in the question.

Correct answer: 3

Source solution

$$a\sin\theta = \frac{3\lambda}{2}$$
$$\frac{y}{L} = \theta = \frac{3\lambda}{2a}$$
$$L = 2\ \mathrm{m}$$
$$y_1 = \frac{3\lambda_1 L}{2a}$$
$$\lambda_2 = 655\ \mathrm{nm}$$
$$y_2 = \frac{3\lambda_2 L}{2a}$$
$$\lambda_1 = 650\ \mathrm{nm}$$
$$a = 0.5\ \mathrm{nm}$$
$$\Delta y = y_2 - y_1 = \frac{3(\lambda_2-\lambda_1)}{2a}L$$
$$= \frac{3(655-650)}{2\times 0.5\times 10^{-3}} \times 2 \times 10^{-9}$$
$$= \frac{3\times 5\times 2}{1\times 10^{-3}} \times 10^{-9}$$
$$= 3 \times 10^{-5}$$

Question 130

In a double slit experiment with monochromatic light, fringes are obtained on a screen placed at some distance from the plane of slits. If the screen is moved by $5 \times 10^{-2}\ \mathrm{m}$ towards the slits, the change in fringe width is $3 \times 10^{-3}\ \mathrm{cm}$. If the distance between the slits is 1 mm , then the wavelength of the light will be nm.

Numerical answer: _____

Enter the requested value (an integer; 0 decimal places). Use the units and scaling stated in the question.

Correct answer: 600

Source solution

$\beta = \frac{\lambda D}{d}$

$\Delta\beta = \frac{\lambda}{d}\Delta D$

$\lambda = \frac{\Delta\beta \cdot \mathrm{d}}{\Delta \mathrm{D}}$

$= \frac{3\times10^{-5}\times1\times10^{-3}}{5\times10^{-2}}$

$= 60 \times 10^{-8} = 600 \times 10^{-9}\ \mathrm{m}$

$= 600\ \mathrm{nm}$

Question 131

In Young's double slit experiment the two slits are 0.6 mm distance apart. Interference pattern is observed on a screen at a distance 80 cm from the slits. The first dark fringe is observed on the screen directly opposite to one of the slits. The wavelength of light will be nm.

Numerical answer: _____

Enter the requested value (an integer; 0 decimal places). Use the units and scaling stated in the question.

Correct answer: 450

Source solution

$d = 0.6 \times 10^{-3}$
$D = 80 \times 10^{-2}$
1st Dark fringe $= \frac{D\lambda}{2d} = \frac{d}{2}, \quad \lambda = \frac{d^2}{D}$
$= 450 \times 10^{-9}\ \mathrm{m}$

Question 132

A beam of light consisting of two wavelengths $7000\AA$ and $5500\AA$ is used to obtain interference pattern in Young's double slit experiment. The distance between the slits is 2.5 mm and the distance between the plane of slits and the screen is 150 cm . The least distance from the central fringe, where the bright fringes due to both the wavelengths coincide, is $\mathbf{n} \times 10^{-5}$ m. The value of n is .

Numerical answer: _____

Enter the requested value (an integer; 0 decimal places). Use the units and scaling stated in the question.

Correct answer: 462

Source solution

$\mathbf{d} = 2.5\ \mathbf{mm}, \mathbf{D} = 150\ \mathbf{cm}$

Fringe width $\beta = \frac{\lambda D}{d}$

Let $\mathbf{n}^{\mathbf{th}}$ bright tringle of $\boldsymbol{\lambda_1}$ match with $\mathbf{m}^{\mathbf{th}}$ bright triangle of $\boldsymbol{\lambda_2}$

$\Rightarrow n\beta_1 = m\beta_2$

$\Rightarrow n\lambda_1 = m\lambda_2 \Rightarrow \frac{n}{m} = \frac{\lambda_2}{\lambda_1} = \frac{5500}{7000}$

$\Rightarrow \frac{n}{m} = \frac{11}{14}$

Distance where bright fringe will match

$= n\beta_1 = \frac{11 \times 7000A^0 \times 150\ \text{cm}}{0.25\ \text{cm}}$

$= 462 \times 10^{-5}$

Question 133

A parallel beam of monochromatic light of wavelength $5000\AA$ is incident normally on a single narrow slit of width 0.001 mm . The light is focused by convex lens on screen, placed on its focal plane. The first minima will be formed for the angle of diffraction of (degree).

Numerical answer: _____

Enter the requested value (an integer; 0 decimal places). Use the units and scaling stated in the question.

Correct answer: 30

Source solution

For first minima

$a \sin\theta = \lambda$

$\Rightarrow \sin\theta = \frac{\lambda}{a} = \frac{5000\times10^{-10}}{1\times10^{-6}} = \frac{1}{2}$

$\Rightarrow \theta = 30^\circ$

Electric Charges and Fields

Questions 134-140 / 7 selected / 2.3% practice weight / Next

Question 134

Two small spheres each of mass 10 mg are suspended from a point by threads 0.5 m long. They are equally charged and repel each other to a distance of 0.20 m . Then charge on each of the sphere is $\frac{a}{21} \times 10^{-8}\mathrm{C}$. The value of 'a' will be .

Numerical answer: _____

Enter the requested value (an integer; 0 decimal places). Use the units and scaling stated in the question.

Correct answer: 20

Source solution

20

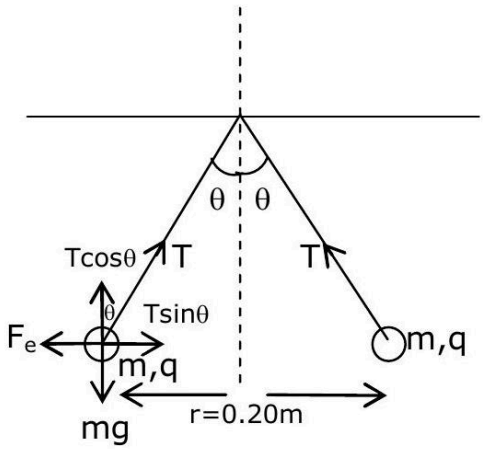

$\mathrm{T}\sin\theta = \frac{\mathrm{kq}^2}{\mathrm{r}^2}$
$\mathrm{T}\cos\theta = \mathrm{mg}$
$\tan\theta = \frac{\mathrm{kq}^2}{\mathrm{mgr}^2}$
$\mathrm{q}^2 = \frac{\tan\theta \mathrm{mgr}^2}{\mathrm{k}}$
$\because \tan\theta = \frac{0.1}{0.5} = \frac{1}{5}$
$\mathrm{q}^2 = \frac{1}{5} \times \frac{10\times10^{-6}\times10\times0.2\times0.2}{9\times10^9}$
$\mathrm{q} = \frac{2\sqrt{2}}{3} \times 10^{-8}$

after comparison from the given equation
$\mathbf{a} = 20$

Question 135

A proton is moving undeflected in a region of crossed electric and magnetic fields at a constant speed of $2 \times 10^5\ \mathrm{ms}^{-1}$. When the electric field is switched off, the proton moves along a circular path of radius 2 cm . The magnitude of electric field is $x \times 10^4\ \mathrm{N/C}$. the value of x is .
Take the mass of the proton $= 1.6 \times 10^{-27}\ \mathrm{kg}$.

Numerical answer: _____

Enter the requested value (an integer; 0 decimal places). Use the units and scaling stated in the question.

Correct answer: 2

Source solution

For uniform speed $V = \frac{E}{B}$
$\mathrm{R} = \frac{\mathrm{mV}}{\mathrm{eB}}$
$= \frac{mV^2}{eE}$
$\Rightarrow \mathrm{E} = \frac{\mathrm{mV}^2}{\mathrm{eR}}$
$= \frac{1.6 \times 10^{-27} \times 4 \times 10^{10}}{1.6 \times 10^{-19} \times 2 \times 10^{-2}}$
$= 2 \times 10^4\ \mathrm{N/C}.$

Question 136

A charge particle of mass m and charge q is released from rest in uniform electric fiel(4) Its graph between velocity (v) and distance (x) will be :

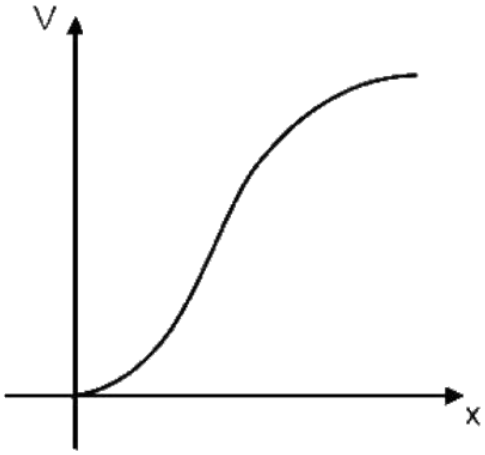

A.

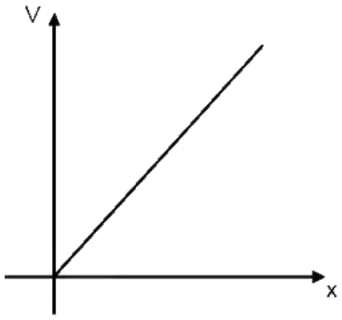

B.

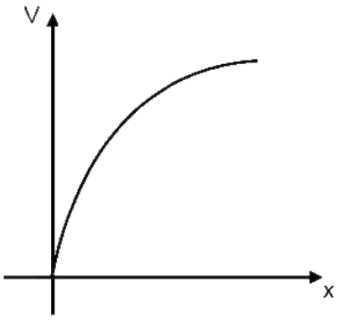

C.

D.

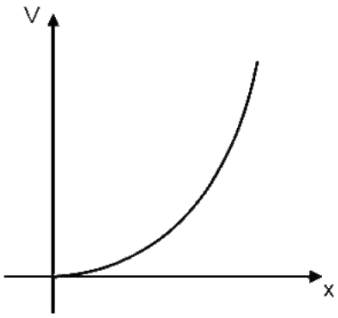

Correct answer: B

Source solution

Sol. Applying the work-energy theorem,

$$qEx = \frac{1}{2}mv^2 \quad \Rightarrow \quad v^2 \propto x$$

Hence, the answer will be option (2).

Question 137

Two uniformly charged spherical conductors A and B of radii 5 mm and 10 mm are separated by a distance of 2 cm . If the spheres are connected by a conducting wire, then in equilibrium condition, the ratio of the magnitudes of the electric fields at the surface of the sphere A and B will be :

A. $1:2$

B. $2:1$

C. $1:1$

D. $1:4$

Correct answer: B

Source solution

$$V_A = V_B$$

$$\frac{KQ_A}{R_A} = \frac{KQ_B}{R_B}$$
$$\frac{Q_A}{Q_B} = \frac{R_A}{R_B} = \frac{1}{2}$$

$$E_A = \frac{KQ_A}{R_A^2}, \qquad E_B = \frac{KQ_B}{R_B^2}$$

$$\frac{E_A}{E_B} = \frac{Q_A}{Q_B} \cdot \frac{R_B^2}{R_A^2} = \frac{R_A}{R_B} \cdot \frac{R_B^2}{R_A^2} = \frac{R_B}{R_A} = \frac{2}{1}$$

$$\boxed{\frac{E_A}{E_B} = 2}$$

Question 138

A particle of mass 1 mg and charge q is lying at the mid-point of two stationary particles kept at distance '2 m' when each is carrying same charge 'q'. If the free charged particle is displaced from its equilibrium position through distance 'x' $(\mathbf{x \ll 1\ m})$. The particle executes SHM. Its angular frequency of oscillation will be ___ $\times 10^5 \mathbf{rad/s}$ if $\mathbf{q^2 = 10C^2}$

Numerical answer: _____

Enter the requested integer (0 decimal places).

Correct answer: 6

Source solution

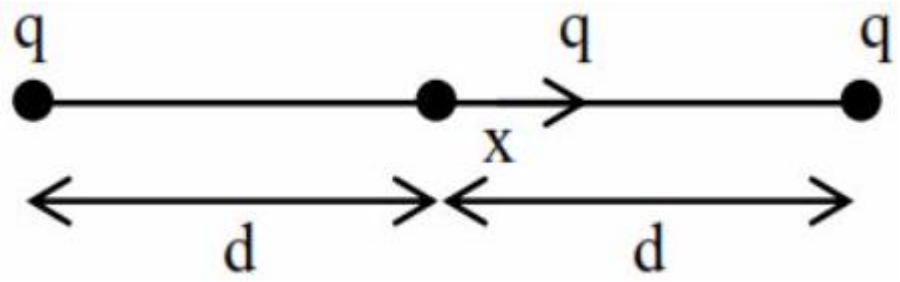

Net force on free charged particle

$$\mathbf{F = \frac{kq^2}{(d+x)^2} - \frac{kq^2}{(d-x)^2}}$$

$$\mathbf{F = -kq^2\left[\frac{4dx}{\left(d^2-x^2\right)^2}\right]}$$

$$\mathbf{a = -\frac{4kq^2\,d}{m}\left(\frac{x}{d^4}\right)}$$

$$\mathbf{a = -\left(\frac{4kq^2}{md^3}\right)x}$$

So, angular frequency

$$\omega = \sqrt{\frac{4kq^2}{md^3}}$$

$$\omega = \sqrt{\frac{4 \times 9 \times 10^9 \times 10}{1 \times 10^{-6} \times 1^3}}$$

$$\omega = 6 \times 10^8 \mathrm{rad/sec}$$

Question 139

A uniform electric field of $10\ \mathrm{N/C}$ is created between two parallel charged pates (as shown in figure). An electron enters the field symmetrically between the plates with a kinetic energy 0.5 eV . The length of each pate is 10 cm . The angle (θ) of deviation of the path of electron as it comes out of the field is (in degree).

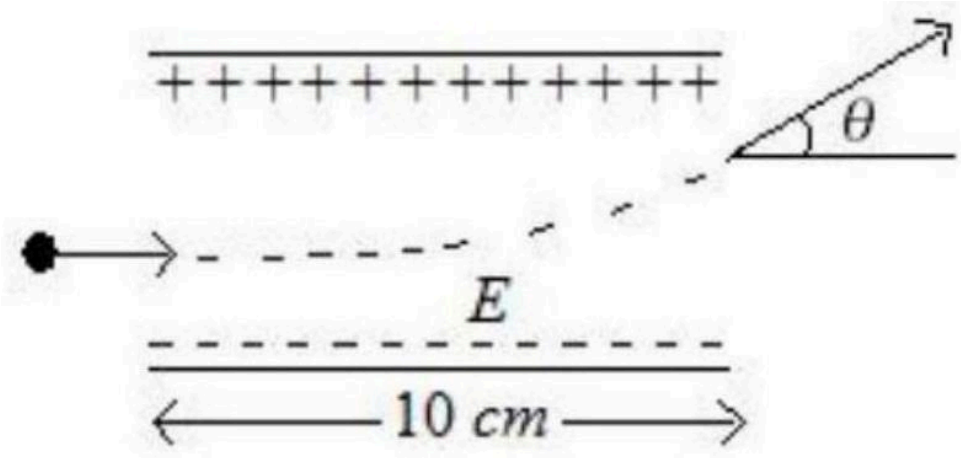

Numerical answer: _____

Enter the requested value (an integer; 0 decimal places). Use the units and scaling stated in the question.

Correct answer: 45

Source solution

45^0

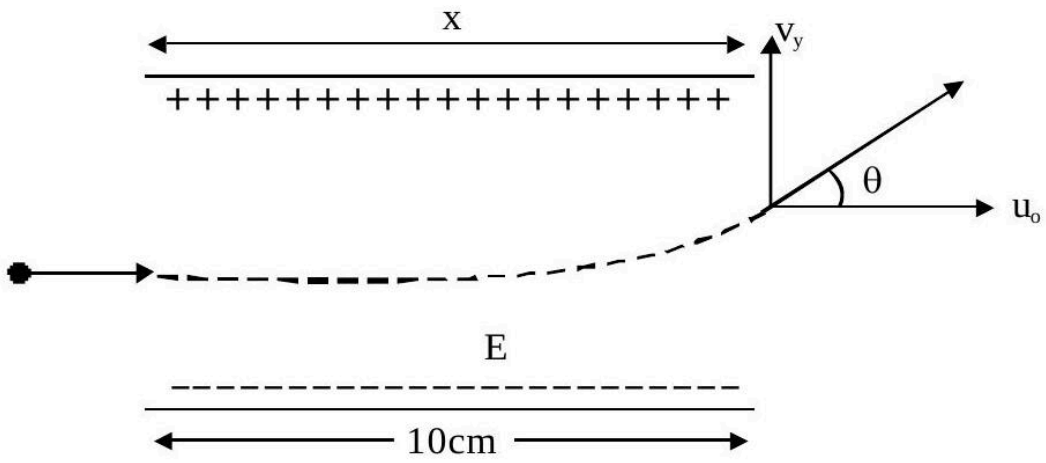

Force due to electric field is given by $\vec{F} = q\vec{E}$

$\therefore F = eE$

$\Rightarrow a = \frac{eE}{m}$

The electron will take a parabolic path i.e., projectile motion.

Here, $s_x = 10\ \text{cm} = 0.1\ \text{m}$

$\therefore t = \frac{0.1}{u_x} - - - - (i)$

Now $v_y = u_y + a_y t$

$$\Rightarrow v_y = 0 + \frac{eE}{m} \times \frac{0.1}{u_x} \quad \text{(ii)}$$

Also $KE = \frac{1}{2}mv^2 = \frac{1}{2}mu_x^2$

$mu_x^2 = 2 \times KE = 2 \times 0.5e = e - - - -$ (iii)

From eq (i),(ii) and (iii), $\tan\theta = \frac{v_y}{u_x} = \frac{eE}{m} \times \frac{0.1}{u_x} \times \frac{1}{u_x} = \frac{0.1eE}{mu_x^2} = \frac{0.1eE}{e} = 0.1 \times 10 = 1$

$\Rightarrow \tan\theta = 1$

$\therefore \theta = 45^0$

Question 140

Three infinitely long charged thin sheets are placed as shown in figure. The magnitude of electric field at the point P is $\frac{x\sigma}{\epsilon_0}$. The value of x is (all quantities are measured in SI units).

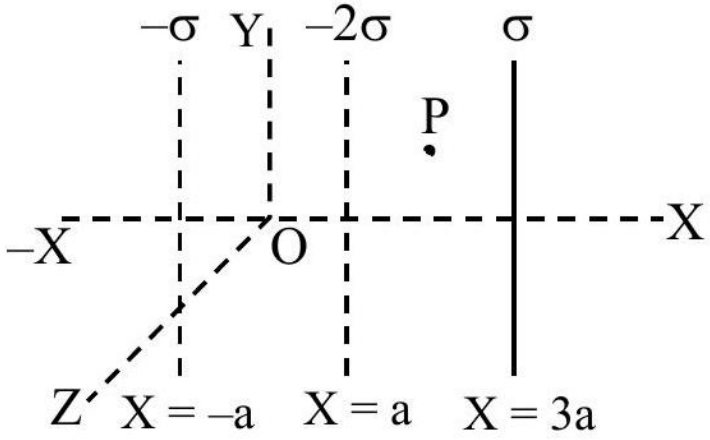

Numerical answer: _____

Enter the requested value (an integer; 0 decimal places). Use the units and scaling stated in the question.

Correct answer: 2

Source solution

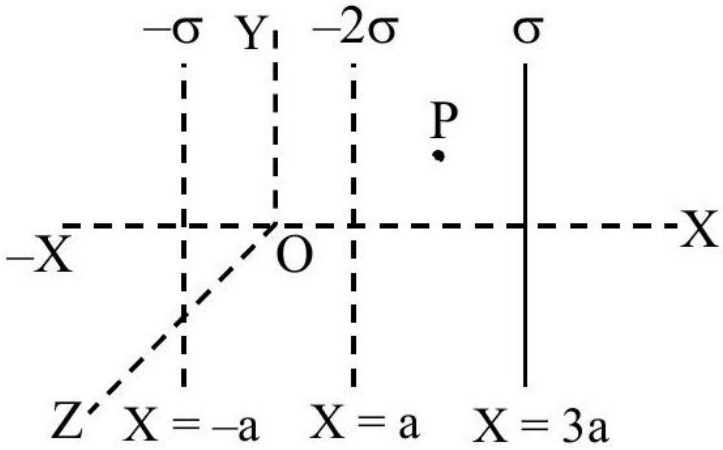

$$\vec{E}_p = \left(\frac{\sigma}{2\varepsilon_0} + \frac{2\sigma}{2\varepsilon_0} + \frac{\sigma}{2\varepsilon_0}\right)(-\hat{i})$$
$$= -\frac{2\sigma}{\varepsilon_0}\hat{i}$$

Electrostatic Potential and Capacitance

Questions 141-145 / 5 selected / 1.7% practice weight / Consolidate

Question 141

A parallel plate capacitor with square plates is filled with four dielectrics of dielectric constants K_1, K_2, K_3, K_4 arranged as shown in the figure. The effective dielectric constant K will be:

$$\begin{vmatrix} K_1 & K_2 \\ K_3 & K_4 \end{vmatrix}$$

$$\text{Plate side } = L, \qquad \text{Thickness } = d$$

$$\leftarrow \frac{d}{2} \rightarrow \quad \leftarrow \frac{d}{2} \rightarrow$$

A. $\mathrm{K} = \frac{(\mathrm{K_1}+\mathrm{K_2})(\mathrm{K_3}+\mathrm{K_4})}{2(\mathrm{K_1}+\mathrm{K_2}+\mathrm{K_3}+\mathrm{K_4})}$

B. $\mathrm{K} = \frac{(\mathrm{K_1}+\mathrm{K_2})(\mathrm{K_3}+\mathrm{K_4})}{(\mathrm{K_1}+\mathrm{K_2}+\mathrm{K_3}+\mathrm{K_4})}$

C. $\mathrm{K} = \frac{(\mathrm{K_1}+\mathrm{K_4})(\mathrm{K_2}+\mathrm{K_3})}{2(\mathrm{K_1}+\mathrm{K_2}+\mathrm{K_3}+\mathrm{K_4})}$

D. $\mathrm{K} = \frac{(\mathrm{K_1}+\mathrm{K_3})(\mathrm{K_2}+\mathrm{K_4})}{\mathrm{K_1}+\mathrm{K_2}+\mathrm{K_3}+\mathrm{K_4}}$

Correct answer: D

Source solution

$$C_{12} = \frac{C_1 C_2}{C_1 + C_2} = \frac{\frac{k_1 \epsilon_0 \frac{L}{2} \cdot L}{d/2} \cdot \frac{k_2 \left[\epsilon_0 \frac{L}{2} \cdot L\right]}{(k_1+k_2)\left[\frac{\epsilon_0 \cdot \frac{L}{2} \cdot L}{d/2}\right]}}{d/2}$$

$$C_{12} = \frac{k_1 k_2}{k_1 + k_2} \frac{\epsilon_0 L^2}{d}$$

In the same way, we get

$$C_{34} = \frac{k_3 k_4}{k_3 + k_4} \frac{\epsilon_0 L^2}{d}$$

$$\therefore C_{\text{eq}} = C_{12} + C_{34} = \left[\frac{k_1 k_2}{k_1 + k_2} + \frac{k_3 k_4}{k_3 + k_4} \right] \frac{\epsilon_0 L^2}{d}$$

Now if $k_{\text{eq}} = k, C_{\text{eq}} = \frac{k \epsilon_0 L^2}{d}$. On comparing equation (i) to equation (ii), we get

$$k_{\text{eq}} = \frac{k_1 k_2 (k_3 + k_4) + k_3 k_4 (k_1 + k_2)}{(k_1 + k_2)(k_3 + k_4)}$$

This does not match with any of the options, so probably they have assumed the wrong combination

$$C_{13} = \frac{k_1 \epsilon_0 L \frac{L}{2}}{d/2} + k_3 \epsilon_0 \frac{L \cdot \frac{L}{2}}{d/2}$$

$$= (k_1 + k_3) \frac{\epsilon_0 L^2}{d}$$

$$C_{24} = (k_2 + k_4) \frac{\epsilon_0 L^2}{d}$$

$$C_{\text{eq}} = \frac{C_{13} C_{24}}{C_{13} + C_{24}} = \frac{(k_1 + k_3)(k_2 + k_4)}{(k_1 + k_2 + k_3 + k_4)} \frac{\epsilon_0 L^2}{d}$$

$$= \frac{k \epsilon_0 L^2}{d}$$

$$k = \frac{(k_1 + k_3)(k_2 + k_4)}{(k_1 + k_2 + k_3 + k_4)}$$

However, this is one of the four options. It must be a bonus logically, but of the given options, probably they might go with (4).

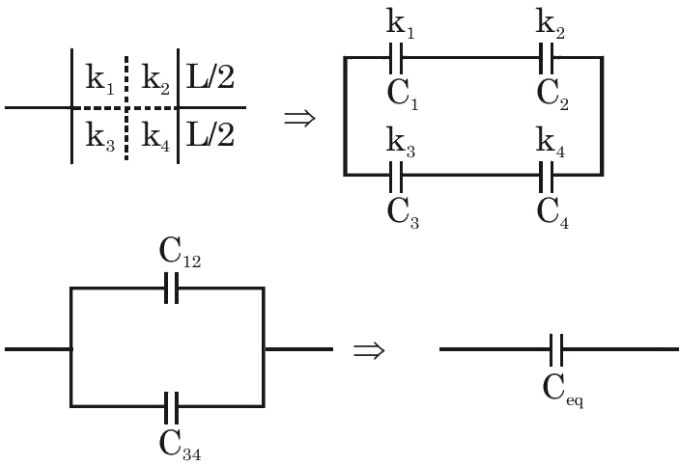
k1
k2
L/2
k3
k4
L/2
⇒
k1
k2
C1
C2
k3
k4
C3
C4
C12
C34
⇒
Ceq

Question 142

A parallel-plate capacitor of capacitance $40\mu\ \mathrm{F}$ is connected to a 100 V power supply. Now the intermediate space between the plates is filled with a dielectric material of dielectric constant $\mathrm{K} = 2$. Due to the introduction of dielectric material, the extra charge and the change in the electrostatic energy in the capacitor, respectively, are -

A. 2 mC and 0.2 J

B. 8 mC and 2.0 J

C. 4 mC and 0.2 J

D. 2 mC and 0.4 J

Correct answer: C

Source solution

$$\Delta q = (C' - C)V = (KC - C)V$$

$$= (K - 1)CV$$

$$= (2 - 1) \times 40 \times 10^{-6} \times 100$$

$$= 4 \times 10^{-3}\ \mathrm{C}$$

$$= 4\,\mathrm{mC}$$

The change in stored energy is

$$\Delta U = \frac{1}{2}C'V^2 - \frac{1}{2}CV^2$$

$$= \frac{1}{2}(K-1)CV^2$$

$$= \frac{1}{2}(2-1)(40\times10^{-6})(100)^2$$

$$= \frac{1}{2}\times40\times10^{-6}\times10^{4}$$

$$= 0.2\,\mathrm{J}$$

$$\boxed{\Delta q = 4\,\mathrm{mC}}$$

$$\boxed{\Delta U = 0.2\,\mathrm{J}}$$

Question 143

Three parallel plate capacitors $\mathbf{C_1, C_2}$ and $\mathbf{C_3}$ each of capacitance $\mathbf{5\mu\ F}$ are connected as shown in figure. The effective capacitance between points A and B , when the space between the parallel plates of $\mathbf{C_1}$ capacitor is filled with a dielectric medium having dielectric constant of 4 , is :

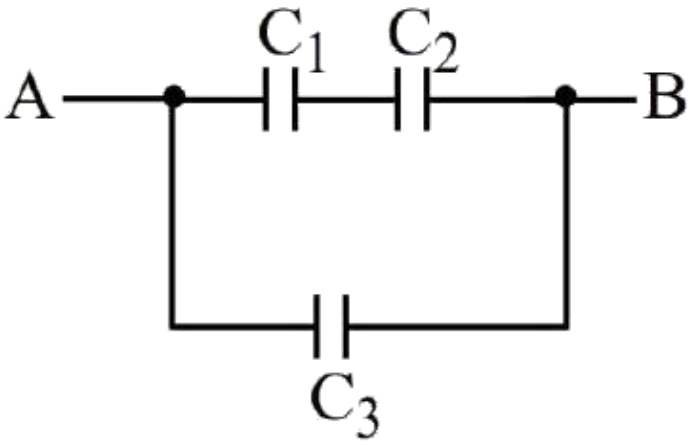

A. $\mathbf{22.5\mu\ F}$

B. $\mathbf{7.5\mu\ F}$

C. $\mathbf{9\mu\ F}$

D. $\mathbf{30\mu\ F}$

Correct answer: C

Source solution

After inserting the dielectric,

$$C_1 = 4C$$

$$C_1 = 4 \times 5 = 20\,\mu\text{F}$$

$$C_2 = C_3 = 5\,\mu\text{F}$$

Since C_1 and C_2 are in series,

$$C_{12} = \frac{C_1 C_2}{C_1 + C_2}$$

$$= \frac{20 \times 5}{20 + 5}$$

$$= 4\,\mu\text{F}$$

This combination is in parallel with C_3. Therefore,

$$C_{\text{eq}} = C_{12} + C_3$$

$$= 4 + 5$$

$$= 9\,\mu\text{F}$$

$$\boxed{C_{\text{eq}} = 9\,\mu\text{F}}$$

Question 144

Electric charge is transferred to an irregular metallic disk as shown in figure. If $\sigma_1, \sigma_2, \sigma_3$ and σ_4 are charge densities at given points then, choose the correct answer from the options given below: (A) $\sigma_1 > \sigma_3; \sigma_2 = \sigma_4$ (B) $\sigma_1 > \sigma_2; \sigma_3 > \sigma_4$ (C) $\sigma_1 > \sigma_3 > \sigma_2 = \sigma_4$ (D) $\sigma_1 < \sigma_3 < \sigma_2 = \sigma_4$(E) $\sigma_1 = \sigma_2 = \sigma_3 = \sigma_4$

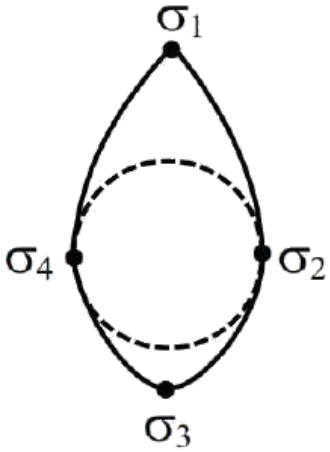

A. A, B and C Only

B. A and C Only

C. D and E Only

D. B and C Only

Correct answer: A

Source solution

For a charged conductor in electrostatic equilibrium, the surface charge density

is greater at regions having smaller radius of curvature.

$$\sigma \propto \frac{1}{R}$$

where R is the local radius of curvature.

Hence,

$$R_1 < R_2 \quad \Rightarrow \quad \sigma_1 > \sigma_2$$

Therefore, to compare

$$\sigma_1,\ \sigma_2,\ \sigma_3,\ \sigma_4,$$

the locations of the four points on the metallic disk must be known.

The given figure is required to determine the correct option.

Question 145

A parallel plate capacitor is filled equally (half) with two dielectrics of dielectric constant ε_1 and ε_2, as shown in figures. The distance between the plates is d and area of each plate is A . If capacitance in first configuration and second configuration are C_1 and C_2 respectively, then $\frac{C_1}{C_2}$ is :

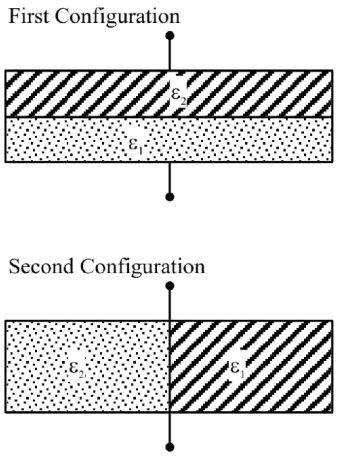

A. $\frac{\varepsilon_1\varepsilon_2^2}{(\varepsilon_1+\varepsilon_2)^2}$

B. $\frac{4\varepsilon_1\varepsilon_2}{(\varepsilon_1+\varepsilon_2)^2}$

C. $\frac{\varepsilon_1\varepsilon_2}{\varepsilon_1+\varepsilon_2}$

D. $\frac{\varepsilon_0(\varepsilon_1+\varepsilon_2)}{2}$

Correct answer: B

Source solution

Sol. Area of plate is A. Then

$$C = \frac{\varepsilon_2\varepsilon_0 A}{\frac{d}{2}} = \frac{2\varepsilon_2\varepsilon_0 A}{d}$$

$$C' = \frac{\varepsilon_1\varepsilon_0 A}{\frac{d}{2}} = \frac{2\varepsilon_1\varepsilon_0 A}{d}$$

Let

$$C_0 = \frac{\varepsilon_0 A}{d}$$

$$C = 2\varepsilon_2 C_0$$

$$C' = 2\varepsilon_1 C_0$$

C and C' are in series:

$$C_1 = \frac{CC'}{C + C'} = \frac{4\varepsilon_2\varepsilon_1 C_0^2}{2C_0\left(\varepsilon_2 + \varepsilon_1\right)} = \frac{2\varepsilon_2\varepsilon_1 C_0}{\left(\varepsilon_2 + \varepsilon_1\right)}$$

Second configuration: Here

$$C = \frac{\varepsilon_1\varepsilon_0 A}{2d} = \frac{\varepsilon_1 C_0}{2}$$

$$C' = \frac{\varepsilon_2 C_0}{2}$$

C and C' are in parallel:

$$C_2 = C' + C = (\varepsilon_1 + \varepsilon_2)\frac{C_0}{2}$$

Thus

$$\frac{C_1}{C_2} = \frac{2\varepsilon_2\varepsilon_1 C_0}{(\varepsilon_2 + \varepsilon_1)} \times \frac{2}{(\varepsilon_1 + \varepsilon_2)C_0} = \frac{4\varepsilon_2\varepsilon_1}{(\varepsilon_2 + \varepsilon_1)^2}$$

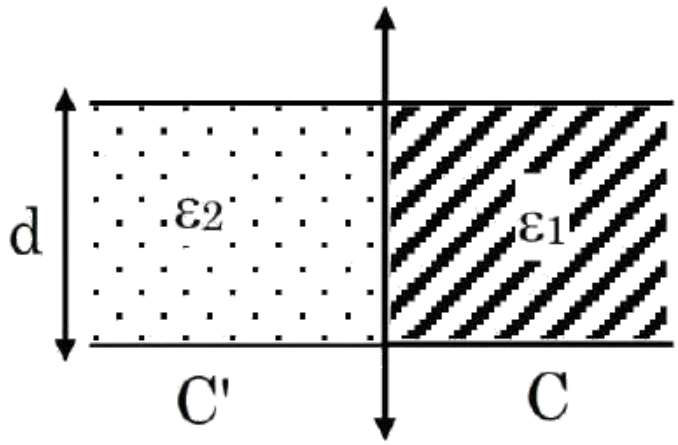
d
ε2
ε1
C'
C

Current Electricity

Questions 146-191 / 46 selected / 15.3% practice weight / Focus first

Question 146

A resistance is shown in the figure. Its value and tolerance are given respectively by:

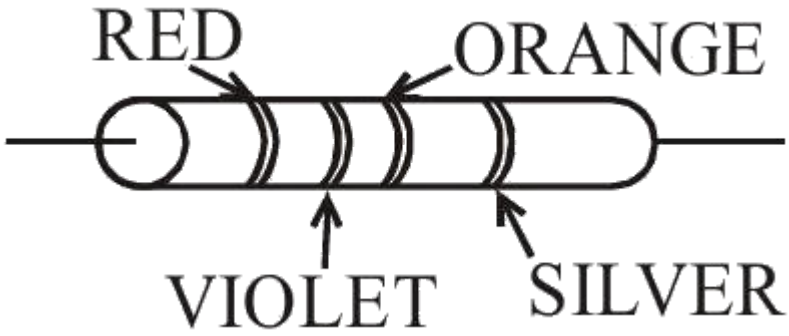

A. $27\ \mathrm{K}\Omega, 20\%$

B. $270\ \mathrm{K}\Omega, 5\%$

C. $270\ \mathrm{K}\Omega, 10\%$

D. $27\ \mathrm{K}\Omega, 10\%$

Correct answer: D

Source solution

Sol. Color code: Red violet orange silver $\mathrm{R} = 27 \times 10^3\ \Omega \pm 10\%$

$$= 27\,\mathrm{K}\,\Omega \pm 10\%$$

Question 147

In the given circuit, the equivalent resistance between the terminal A and B is Ω.

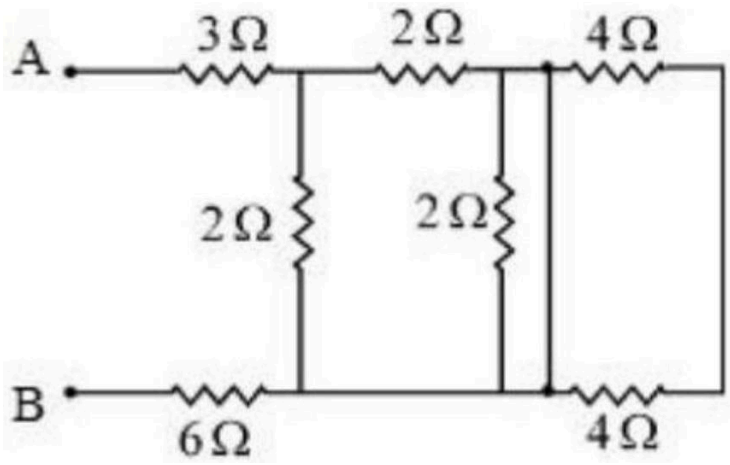

Numerical answer: _____

Enter the requested value (an integer; 0 decimal places). Use the units and scaling stated in the question.

Correct answer: 10

Source solution

10

Due to short circuit, 3 resistances get vanished from the circuit.

The circuit is

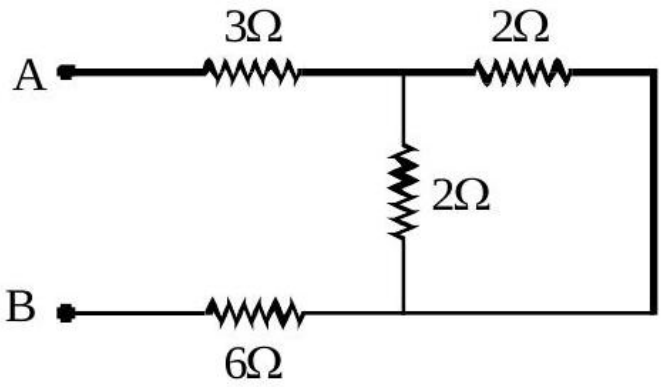

$$R_{eq} = 3 + 3 + 1 = 10\Omega$$

Question 148

A wire of resistance R is bent to form a square $ABCD$ as shown in the figure. The effective resistance between E and C is(E is mid-point of arm CD)

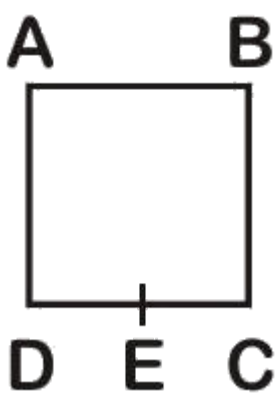

A. $\frac{3}{4}R$

B. R

C. $\frac{1}{16}R$

D. $\frac{7}{64}\mathrm{R}$

Correct answer: D

Source solution

Sol. $\mathrm{R}_1 = \frac{\mathrm{R}}{8}, \quad \mathrm{R}_2 = \frac{7\mathrm{R}}{8}$

$$\frac{1}{R_{\mathrm{eq}}} = \frac{8}{R} + \frac{8}{7R}$$

$R_{\mathrm{eq}} = \frac{7R}{64}$

Question 149

A battery of unknown emf connected to a potentiometer has balancing length 560 cm . If a resistor of resistance 10Ω is connected in parallel with the cell the balancing length change by 60 cm . If the internal resistance of the cell is $\frac{n}{10}\Omega$, the value of ' n ' is

Numerical answer: _____

Enter the requested value (an integer; 0 decimal places). Use the units and scaling stated in the question.

Correct answer: 12

Source solution

(12)

Let the emf of cell is ε internal resistance is $'r'$ and potential gradient is x.

$$\varepsilon = 560x \quad (1)$$

After connecting the resistor

$$\frac{\varepsilon \times 10}{10 + r} = 500x \quad (2)$$

From (1) and (2)

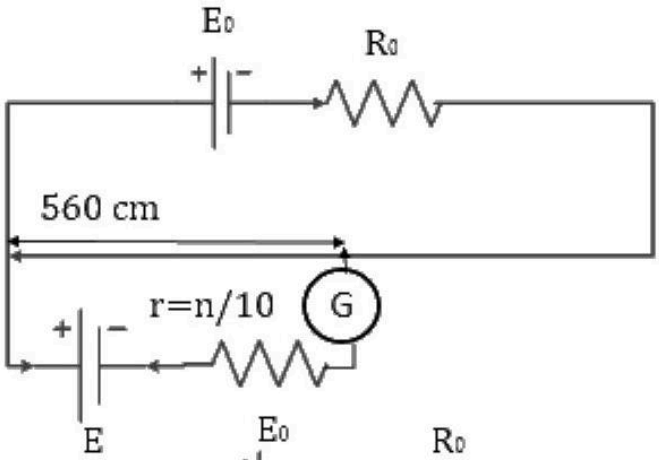

$$\frac{560 \times 10}{10 + r} = 500s$$
$$56 = 540 + 5r$$
$$r = \frac{6}{5} = 1.2\Omega$$

$$\mathbf{n = 12}$$

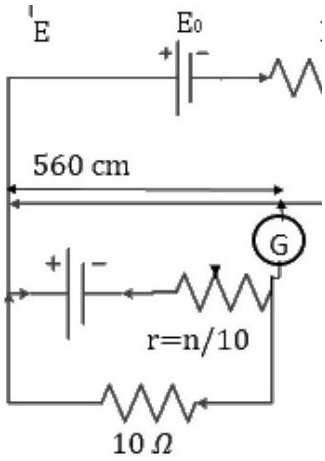

Question 150

In the given circuit, an ideal voltmeter connected across the 10Ω resistance reads 2 V . The internal resistance r, of each cell is :

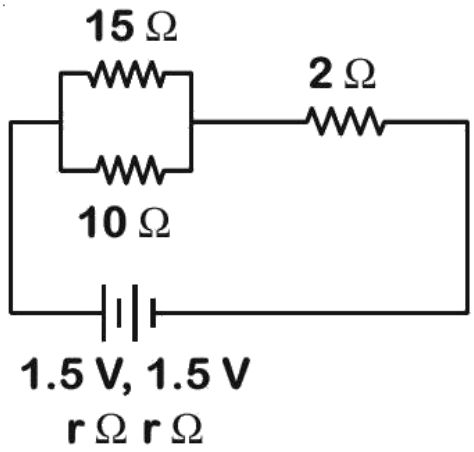

A. 0.5Ω

B. 0Ω

C. 1.5Ω

D. 1Ω

Correct answer: A

Source solution

Sol. For the given circuit, given that $\mathrm{V_{AB}} = 2\,\mathrm{V}$, we have

$$I = \frac{2}{15} + \frac{2}{10} = \frac{1}{3}\,\mathrm{A}$$

Also,

$$I(2r + 2) = 1.5 + 1.5 - \mathrm{V_{AB}}$$

$\Rightarrow 2r + 2 = (3 - 2) \cdot 3$

$\Rightarrow r = \frac{1}{2}\,\Omega$

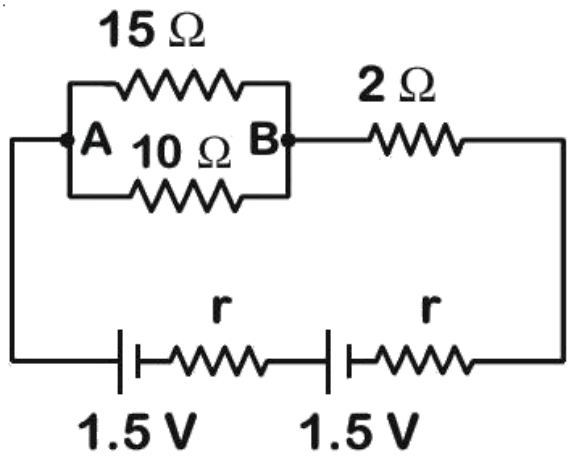
15 Ω
2 Ω
A
10 Ω
B
r
r
1.5 V
1.5 V

Question 151

The equivalent resistance between the points A and B in the following circuit is $\frac{x}{5}\Omega$. The value of x is _____.

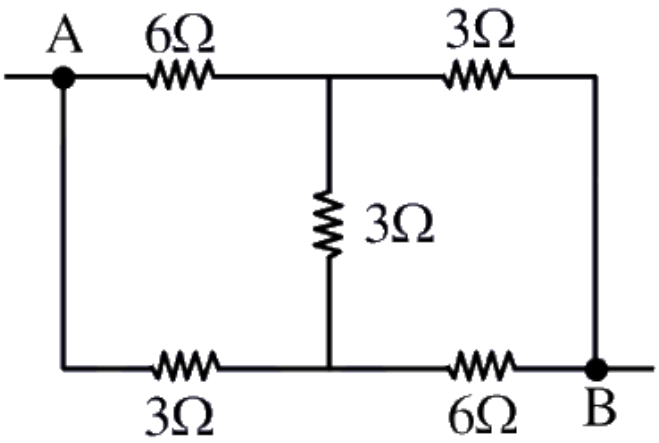

Numerical answer: _____

Enter an integer. Use the units and scaling requested in the question.

Correct answer: 21

Source solution

$$6i_1 + 3(2i_1 - i) = 3(i - i_1)$$
$$\Rightarrow 15i_1 = 6i \Rightarrow i_1 = \frac{2}{5}i$$

$3(i - i_1) + 6i_1 = 1$
$3i + 3i_1 = 1$
$\left(3 + \frac{6}{5}\right)i = 1$
$\Rightarrow i = \frac{5}{21}\ A = \frac{1\ V}{R_{eq}} \Rightarrow R_{eq} = \frac{21}{5}\Omega$

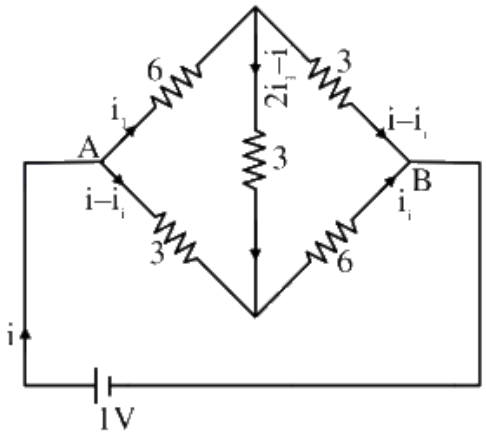
6
3
3
3
6
A
B
i
1V

Question 152

In the figure given, the electric current flowing through the $5k\Omega$ resistor is ' x ' mA .

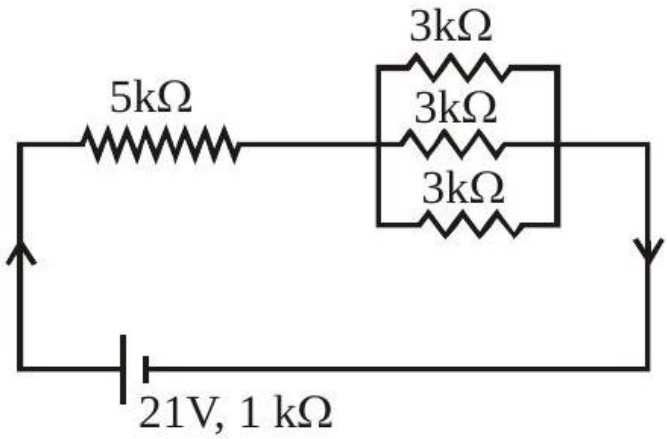

The value of x to the nearest integer is

.

Numerical answer: _____

Enter the requested value (an integer; 0 decimal places). Use the units and scaling stated in the question.

Correct answer: 3

Source solution

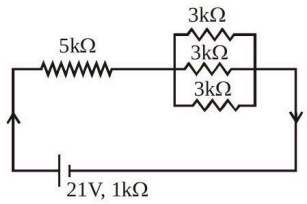

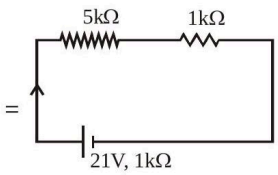

$$\mathrm{I} = \frac{21}{5+1+1} = 3\ \mathrm{mA}$$

Question 153

The voltage across the 10Ω resistor in the given circuit is x volt.

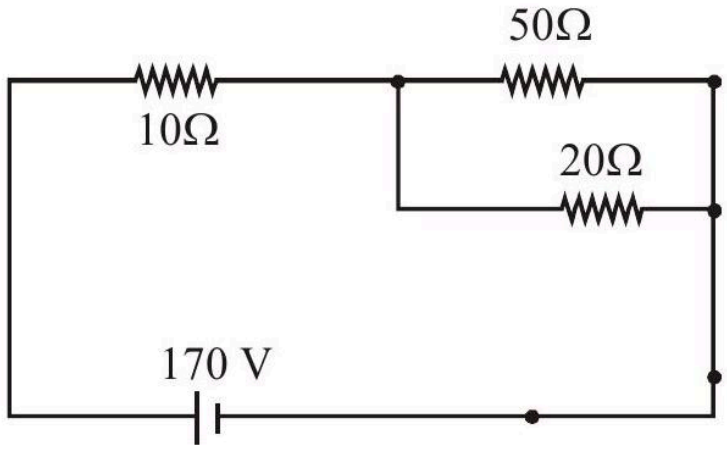

The value of ' x ' to the nearest integer is .

Numerical answer: _____

Enter the requested value (an integer; 0 decimal places). Use the units and scaling stated in the question.

Correct answer: 70

Source solution

$R_{eq_1} = \frac{50\times20}{70} = \frac{100}{7}$

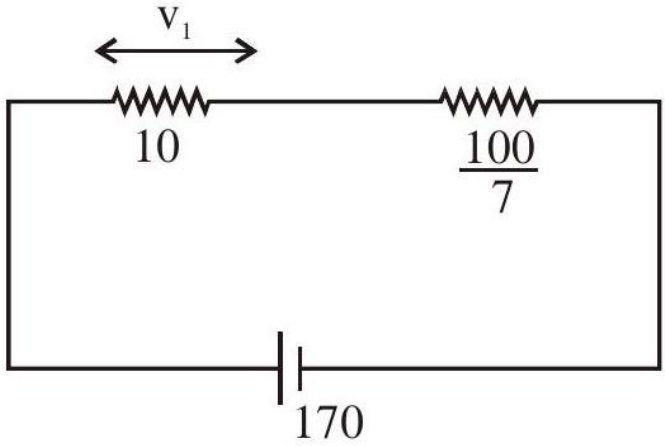

$R_{eq} = \frac{170}{7}$

$\mathbf{v_1} = \left[\frac{170}{\frac{170}{7}}\right] \times 10 = 70\mathbf{v}$

Ans. $= 70.00$

Question 154

The energy dissipated by a resistor is 10 mJ in 1 s when an electric current of 2 mA flows through it. The resistance is Ω.

(Round off to the Nearest Integer)

Numerical answer: _____

Enter the requested value (an integer; 0 decimal places). Use the units and scaling stated in the question.

Correct answer: 2500

Source solution

Ans. (2500)

$\mathbf{Q = i^2RT}$

$\mathbf{R = \frac{Q}{i^2t} = \frac{10\times10^{-3}}{4\times10^{-6}\times1} = 2500\Omega}$

Question 155

Refer to the circuit diagram given in the figure, which of the following observation are correct?A. Total resistance of circuit is 6Ω.B. Current in Ammeter is 1 AC. Potential across AB is 4 Volts.D. Potential across CD is 4 Volts.E. Total resistance of the circuit is 8Ω.Choose the correct answer from the options given below:

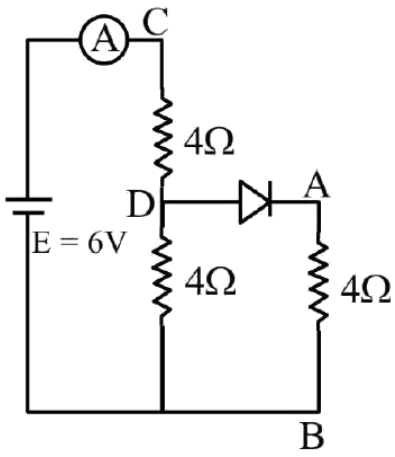

A. A, B and D only

B. A, C and D only

C. B, C and E only

D. A, B and C only

Correct answer: A

Source solution

$$I_A = 1\,\text{A}$$

$$R_{\text{net}} = 6\,\Omega$$

$$V_{AB} = IR = 0.5 \times 4 = 2\,\text{V}$$

$$V_{CD} = IR = 1 \times 4 = 4\,\text{V}$$

$$\boxed{V_{AB} = 2\,\text{V}}$$

$$\boxed{V_{CD} = 4\,\text{V}}$$

$$\boxed{\text{Options A, B and D are correct.}}$$

Question 156

Find the equivalent resistance between two ends of the following circuit.

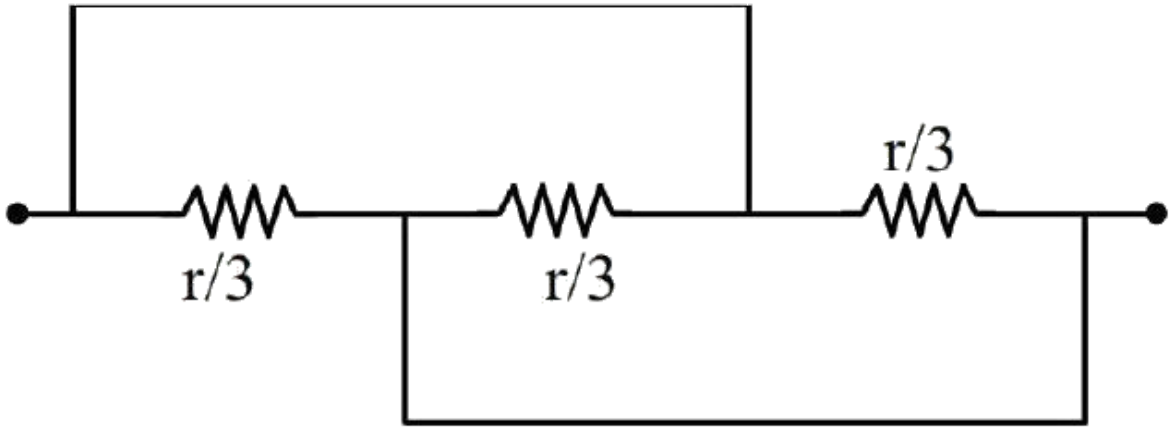

A. r

B. $\frac{r}{6}$

C. $\frac{r}{9}$

D. $\frac{r}{3}$

Correct answer: C

Source solution

All three resistors $\left(\frac{r}{3}\right)$ are in parallel.

$$R_{\text{eq}} = \frac{\frac{r}{3}}{3}$$

$$\boxed{R_{\text{eq}} = \frac{r}{9}}$$

Question 157

The reading of the ammeter (A) in steady state in the following circuit (assuming negligible internal resistance of the ammeter) is

_____

A.

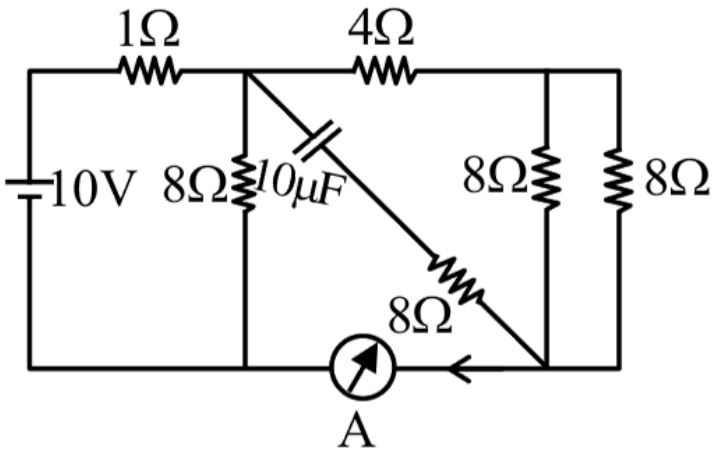

A. 2

B. 1

C. 1/2

D. 0

Correct answer: B

Source solution

Sol. Given:

$$V = 10\ \text{V}$$

The circuit contains a capacitor of capacitance

$$C = 10\mu\text{F}.$$

Step 1: Behaviour of the capacitor in steady state- For a capacitor,

$$I_C = C\frac{dV_C}{dt}.$$

In steady-state DC conditions, the voltage across the capacitor becomes constant. Therefore,

$$\frac{dV_C}{dt} = 0.$$

Hence,

$$I_C = 0.$$

Thus the capacitor behaves as an open circuit. Since the capacitor is in series with the diagonal 8Ω resistor, no current can flow through the entire diagonal branch. Therefore, that branch can be removed from the circuit. The remaining network consists of:

$$1\Omega$$

in series with the parallel combination of

$$8\Omega$$

and

$$4\Omega + (8\Omega \parallel 8\Omega).$$

Step 2: Simplify the right-hand side- The two rightmost 8Ω resistors are in parallel:

$$8\Omega \parallel 8\Omega = \frac{8 \times 8}{8 + 8} = 4\Omega.$$

Hence the upper path becomes

$$4\Omega + 4\Omega = 8\Omega.$$

Therefore, between the node after the 1Ω resistor and the bottom conductor, there are two parallel branches of equal resistance:

$$8\Omega \parallel 8\Omega.$$

Their equivalent resistance is

$$R_{\text{parallel}} = \frac{8 \times 8}{8 + 8} = 4\Omega.$$

Step 3: Total resistance of the circuit- The 1Ω resistor is in series with this parallel combination. Therefore,

$$R_{\text{total}} = 1 + 4 = 5\Omega.$$

The total current supplied by the battery is

$$I_{\text{source}} = \frac{V}{R_{\text{total}}} = \frac{10}{5} = 2\ \text{A}.$$

Step 4: Current division- The total current of $2\ \text{A}$ reaches the junction and splits between two equal branches:

$$8\Omega \quad \text{and} \quad 8\Omega.$$

Since the resistances are equal, the current divides equally. Thus,

$$I_1 = I_2 = \frac{2}{2} = 1\ \text{A}.$$

So,

$$1\ \text{A}$$

flows through the left vertical 8Ω resistor and

$$1\ \mathrm{A}$$

flows through the right-hand branch. Step 5: Ammeter reading- The ammeter is not in series with the battery. It is located in the return path of the right-hand branch. Therefore, the ammeter measures only the current flowing through the right-hand branch, which is

$$1\ \mathrm{A}.$$

Hence,

$$\boxed{I_A = 1\ \mathrm{A}}$$

Remark- The total current supplied by the battery is

$$2\ \mathrm{A},$$

but the ammeter does not measure this total current. It measures only the current returning from the right branch. Therefore the ammeter reading is

$$\boxed{1\ \mathrm{A}}$$

Question 158

The circuit shown in the figure consists of a charged capacitor of capacity $3\mu\ \mathrm{F}$ and a charge of $30\mu\mathrm{C}$. At time $t = 0$, when the key is closed, the value of current flowing through the $5\mathrm{M}\Omega$ resistor is ' x ' $\mu - \mathrm{A}$. The value of ' x to the nearest integer is .

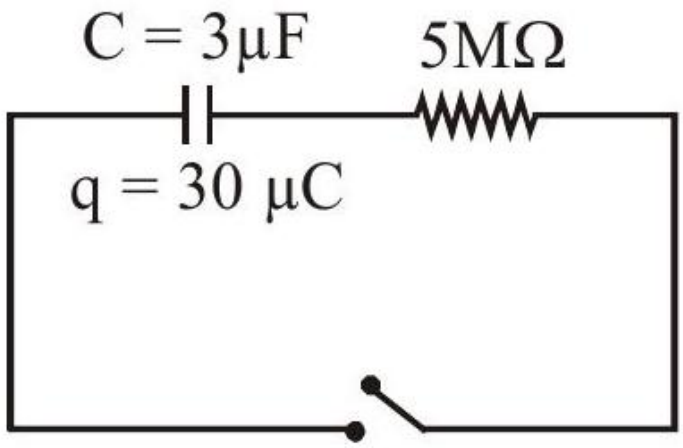

Numerical answer: _____

Enter the requested value (an integer; 0 decimal places). Use the units and scaling stated in the question.

Correct answer: 2

Source solution

$i_0 = \frac{V}{R} = \frac{30/3}{5\times10^6} = 2 \times 10^{-6}$
$\therefore$ Ans. $= 2.00$

Question 159

The value of current I in the electrical circuit as given below, when potential at A is equal to the potential at B, will be A.

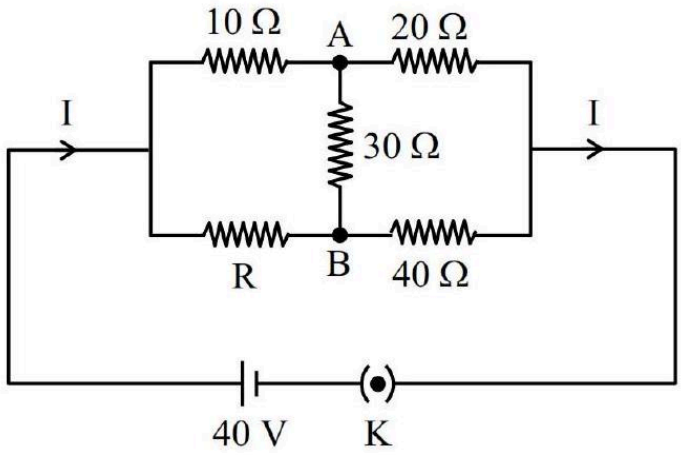

Numerical answer: _____

Enter an integer (0 digits after the decimal point). Round to the nearest integer where requested; enter the coefficient of any power of ten shown in the question.

Correct answer: 2

Source solution

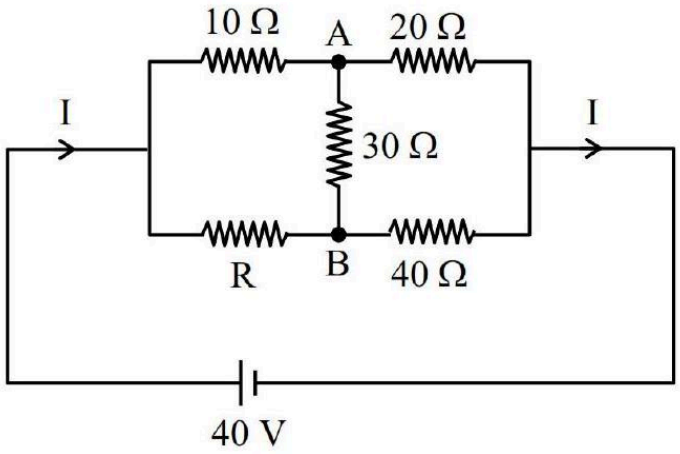

$\mathbf{V_A = V_B} \Rightarrow$ the bridge is balanced

$\Rightarrow \frac{10}{R} = \frac{20}{40}$

$\mathbf{R = 20\Omega}$

$\mathbf{I = \frac{40}{20} = 2\ A}$

Question 160

Two known resistance of $\mathbf{R\Omega}$ and $\mathbf{2R\Omega}$ and and one unknown resistance $\mathbf{X\Omega}$ are connected in a circuit as shown in the figure. If the equivalent resistance between points A and B in the circuit is $\mathbf{X\Omega}$, then the value of X is

_____

$\mathbf{\Omega}$.

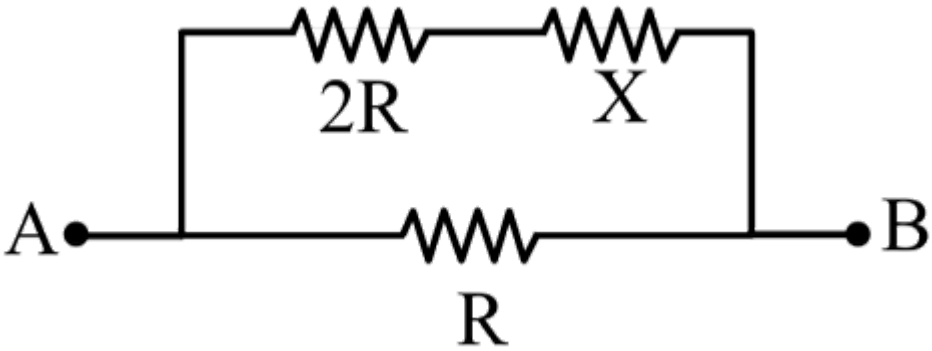

A. $(\sqrt{3}-1)\mathrm{R}$

B. R

C. $2(\sqrt{3}-1)\mathrm{R}$

D. $(\sqrt{3}+1)\mathrm{R}$

Correct answer: A

Source solution

$\frac{(2\mathrm{R}+\mathrm{x}).(\mathrm{R})}{3\mathrm{R}+\mathrm{x}} = \mathrm{x}$

$$x^2 + 2Rx - 2R^2 = 0$$

$$x = (\sqrt{3}-1)R$$

Question 161

The net current flowing in the given circuit is

A.

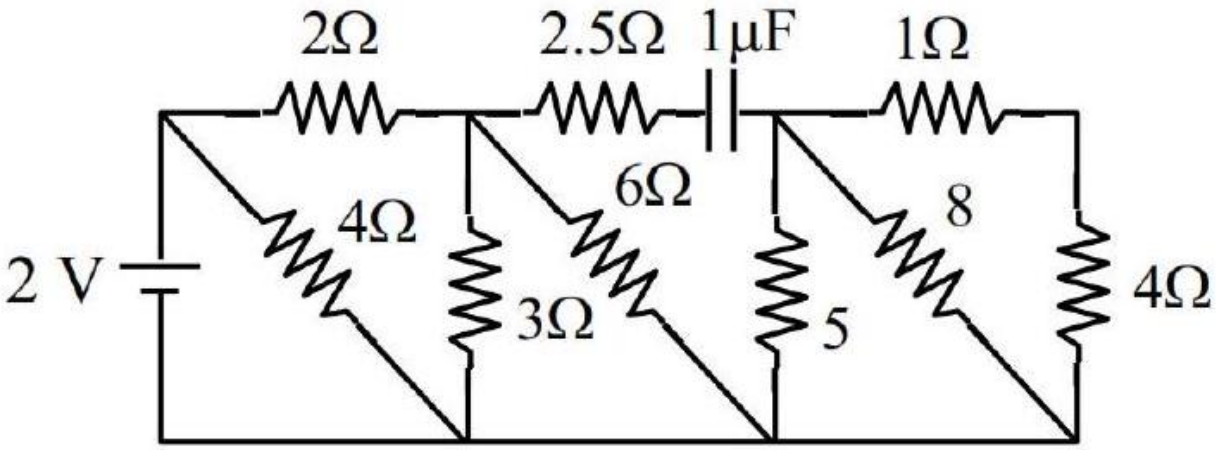

Numerical answer: _____

Enter an integer (0 digits after the decimal point). Round to the nearest integer where requested; enter the coefficient of any power of ten shown in the question.

Correct answer: 1

Source solution

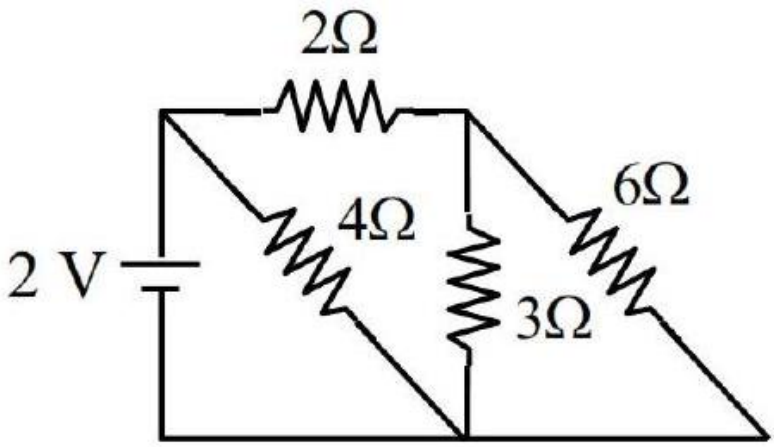

$R_{eq} = 2\Omega$

$I = \frac{2}{2} = 1\ A$

Question 162

A wire of length 25 m and cross-sectional area $5\ \mathrm{mm}^2$ having resistivity of $2 \times 10^{-6}\Omega\ \mathrm{m}$ is bent into a complete circle. The resistance between diametrically opposite points will be

A. 12.5Ω

B. 50Ω

C. 100Ω

D. $2.5\ \Omega$

This question was incorrect in the original exam paper and ALLEN marked it BONUS because the correct value was missing from the options. For practice, option 4 has been corrected from 25 ohm to 2.5 ohm. Select the correct option.

Correct answer: D

Source solution

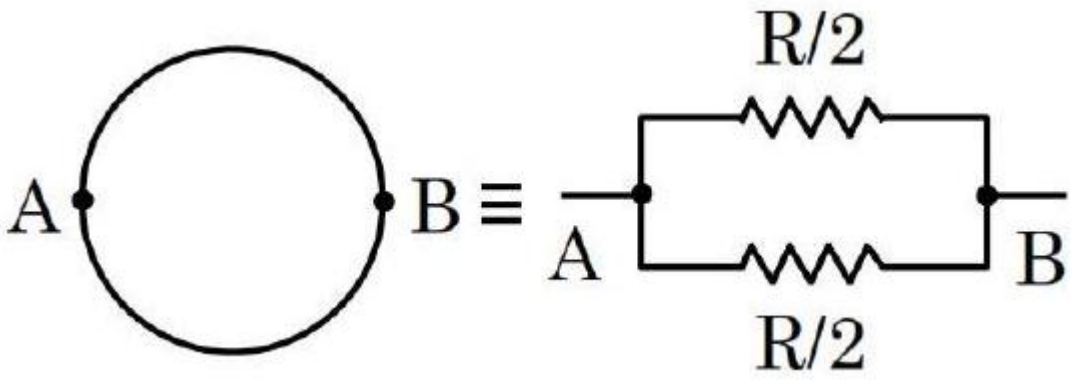

$$\mathrm{L} = 25\ \mathrm{m},\ \mathrm{A} = 5\ \mathrm{mm}^2 = 5 \times 10^{-6}\ \mathrm{m}^2$$
$$\rho = 2 \times 10^{-6}\Omega\ \mathrm{m}$$
$$\mathrm{R}_{\mathrm{wire}} = \frac{\rho \mathrm{L}}{\mathrm{A}} = \frac{2 \times 10^{-6} \times 25}{5 \times 10^{-6}} = 10$$
$$\mathrm{R}_{\mathrm{eq}} = \frac{\mathrm{R}}{4} = \frac{10}{4} = 2.5\Omega$$

The full wire resistance is 10 ohm. Each semicircle has resistance 5 ohm; the two semicircles are in parallel, giving 2.5 ohm. In this corrected practice version, option 4 has been replaced with 2.5 ohm.

Question 163

A uniform conducting wire of length is 24 a , and resistance R is wound up as a current carrying coil in the shape of an equilateral triangle of side ' a ' and then in the form of a square of side ' a '. The coil is connected to a voltage source $\mathbf{V_0}$. The ratio of magnetic moment of the coils in case of equilateral triangle to that for square is $1 : \sqrt{y}$ where y is

Numerical answer: _____

Enter the requested value (an integer; 0 decimal places). Use the units and scaling stated in the question.

Correct answer: 3

Source solution

In triangle shape $\mathbf{N_t} = \frac{24a}{3a} = 8$
In square $N_s = \frac{24a}{4a} = 6$
$\frac{M_t}{M_3} = \frac{N_t I A_t}{N_s I A_s}$ [I will be same in both]
$= \frac{8 \times \frac{\sqrt{3}}{4} \times a^2}{6 \times a^2}$
$\frac{M_t}{M_s} = \frac{1}{\sqrt{3}}$
$y = 3$

Question 164

First, a set of n equal resistors of 10Ω each are connected in series to a battery of emf 20 V and internal resistance 10Ω. A current I is observed to flow. Then, the n resistors are connected in parallel to the same battery. It is observed that the current is increased 20 times, then the value of n is

Numerical answer: _____

Enter the requested value (an integer; 0 decimal places). Use the units and scaling stated in the question.

Correct answer: 20

Source solution

In series

$\mathrm{R_{eq}} = \mathrm{nR} = 10\mathrm{n}$

$\mathrm{i_s} = \frac{20}{10+10\mathrm{n}} = \frac{2}{1+\mathrm{n}}$

in parallel

$\mathrm{R_{eq}} = \frac{10}{\mathrm{n}}$

$\mathrm{i_p} = \frac{20}{\frac{10}{\mathrm{n}}+10} = \frac{2\mathrm{n}}{1+\mathrm{n}}$

$\frac{i_p}{i_s} = 20$

$\frac{\left(\frac{2n}{1+n}\right)}{\left(\frac{2}{1+n}\right)} = 20$

$\mathrm{n} = 20$

Question 165

A wire of length 10 cm and radius $\sqrt{7} \times 10^{-4}\ \mathrm{m}$ connected across the right gap of a meter bridge. When a resistance of 4.5Ω is connected on the left gap by using a resistance box, the balance length is found to be at 60 cm from the left end. If the resistivity of the wire is $\mathrm{R} \times 10^{-7} \Omega\ \mathrm{m}$, then value of R is :

A. 63

B. 70

C. 66

D. 35

Correct answer: C

Source solution

For the null point,

$$\frac{4.5}{60} = \frac{R}{40}$$

Also,

$$R = \frac{p\ell}{A} = \frac{p\ell}{\pi r^2}$$

$$4.5 \times 40 = \rho \times \frac{0.1}{\pi \times 7 \times 10^{-8}} \times 60$$

$$\rho = 66 \times 10^{-7}\ \Omega \cdot \mathrm{m}$$

Question 166

In the given circuit, the current flowing through the resistance $\mathbf{20\Omega}$ is 0.3 A , while the ammeter reads 0.9 A . The value of $\mathbf{R_1}$ is Ω.

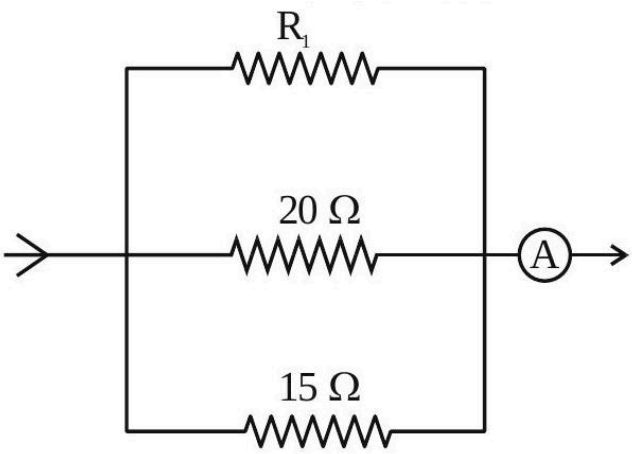

Numerical answer: _____

Enter the requested value (an integer; 0 decimal places). Use the units and scaling stated in the question.

Correct answer: 30

Source solution

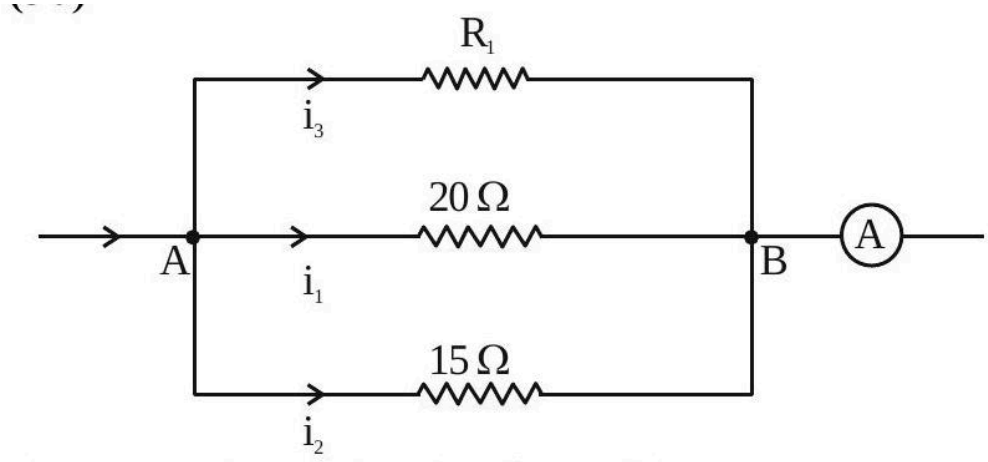

Given, $i_1 = 0.3\ \mathrm{A}, i_1 + i_2 + i_3 = 0.9\ \mathrm{A}$

So, $\mathrm{V_{AB}} = \mathrm{i_1} \times 20\Omega = 20 \times 0.3\ \mathrm{V} = 6\ \mathrm{V}$

$\mathrm{i_2} = \frac{6\ \mathrm{V}}{15\Omega} = \frac{2}{5}\ \mathrm{A}$

$\mathrm{i_1} + \mathrm{i_2} + \mathrm{i_3} = \frac{9}{10}\ \mathrm{A}$

$\frac{3}{10}+\frac{2}{5}+\mathrm{i}_3=\frac{9}{10}$
$\frac{7}{10}+\mathrm{i}_3=\frac{9}{10}$
$\mathrm{i}_3=0.2\ \mathrm{A}$
So, $\mathrm{i}_3 \times \mathrm{R}_1=6\ \mathrm{V}$
$(0.2)\ \mathrm{R}_1=6$
$\mathrm{R}_1=\frac{6}{0.2}=30\Omega$

Question 167

The voltage drop across 15Ω resistance in the given figure will be V.

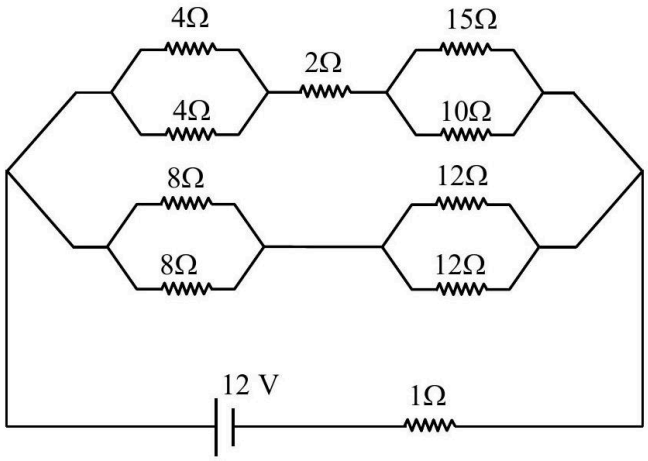

Numerical answer: _____

Enter the requested value (an integer; 0 decimal places). Use the units and scaling stated in the question.

Correct answer: 6

Source solution

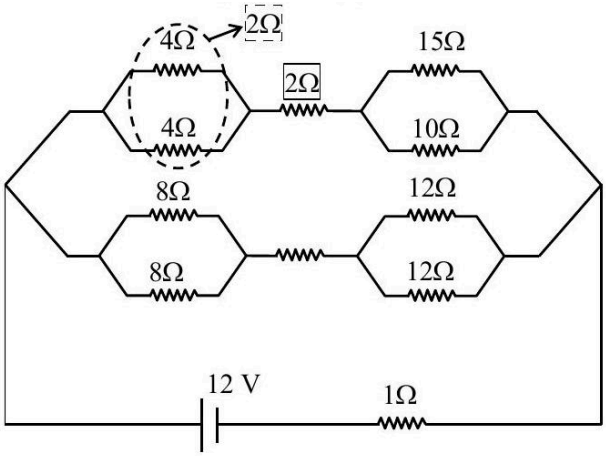

⇒ effective circuit diagram will be

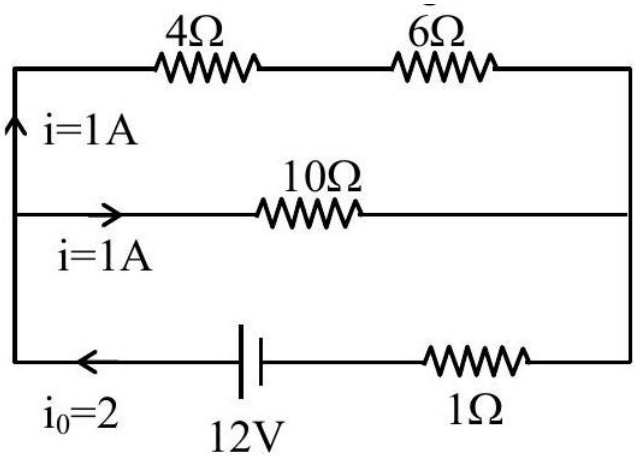

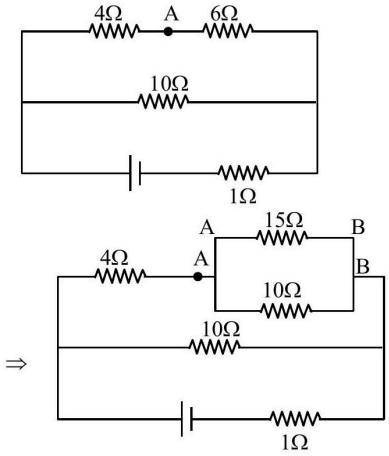

Point drop across $\mathbf{6\Omega = 1 \times 6 = 6 = V_{AB}}$

$\Rightarrow$ Hence point drop across $\mathbf{15\Omega = 6}$ volt $= \mathbf{V_{AB}}$

Question 168

A resistor dissipates 192 J of energy in 1 s when a current of 4A is passed through it. Now, when the current is doubled, the amount of thermal energy dissipated in 5 s in J.

Numerical answer: _____

Enter the requested value (an integer; 0 decimal places). Use the units and scaling stated in the question.

Correct answer: 3840

Source solution

$$E = i^2Rt$$
$$192 = 16(\mathrm{R})(1)$$
$$\mathrm{R} = 12\Omega$$
$$\mathrm{E}^1 = (8)^2(12)(5)$$
$$= 3840\ \mathrm{J}$$

Question 169

The equivalent resistance of the given circuit between the terminals A and B is :

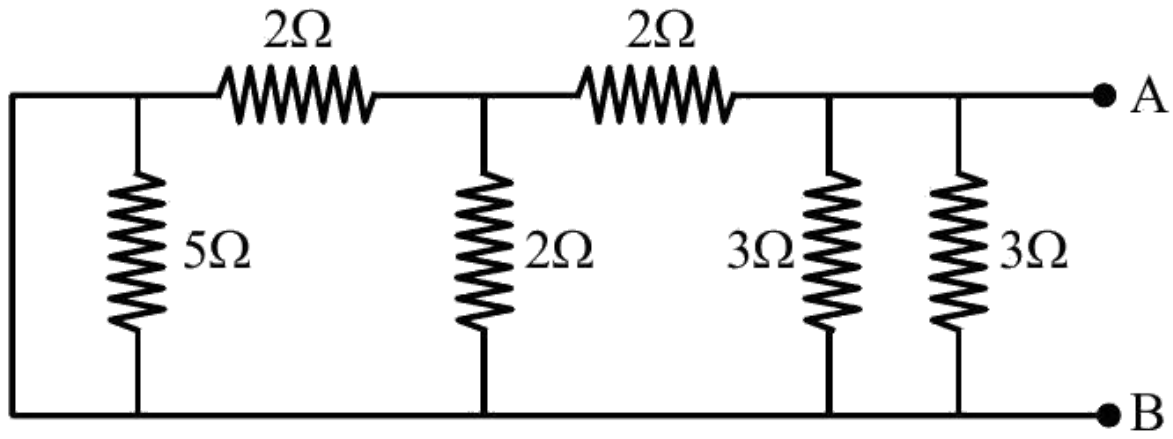

A. 0Ω

B. 3Ω

C. $\frac{9}{2}\Omega$

D. 1Ω

Correct answer: D

Source solution

$$R_{\text{eq}} = \frac{3 \times \frac{3}{2}}{3 + \frac{3}{2}}$$

$$= \frac{\frac{9}{2}}{\frac{9}{2}}$$

$$= 1\,\Omega$$

$$\boxed{R_{\text{eq}} = 1\,\Omega}$$

Question 170

The ratio of the equivalent resistance of the network (shown in figure) between the points a and b when switch is open and switch is closed is $x : 8$. The value of x is .

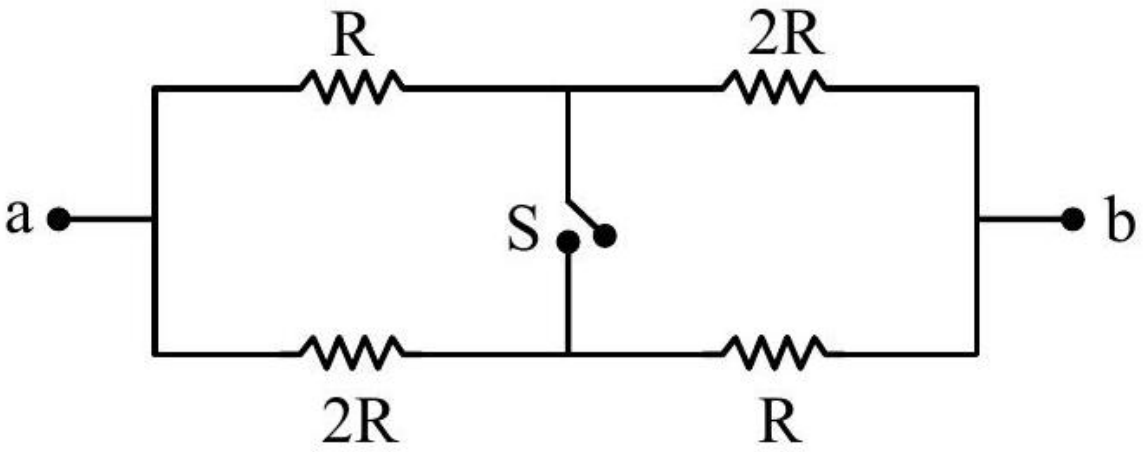

Numerical answer: _____

Enter the requested value (an integer; 0 decimal places). Use the units and scaling stated in the question.

Correct answer: 9

Source solution

$R_{\text{eq open}} = \frac{3R}{2}$

$R_{\text{eq closed}} = 2 \times \frac{R \times 2R}{3R} = \frac{4R}{3}$

$\frac{R_{\text{eq open}}}{R_{\text{eq closed}}} = \frac{3R}{2} \times \frac{3}{4R} = \frac{9}{8}$

$\therefore x = 9$

Question 171

Consider a galvanometer shunted with 5Ω resistance and 2% of current passes through it.What is the resistance of the given galvanometer?

A. 300Ω

B. 344Ω

C. 245Ω

D. 226Ω

Correct answer: C

Source solution

$$I_g = 0.02I, \qquad I_s = 0.98I$$

Since the galvanometer and shunt are in parallel,

$$I_g R_g = I_s R_s$$

$$0.02I \cdot R_g = 0.98I \cdot 5$$

$$R_g = \frac{0.98 \times 5}{0.02}$$

$$R_g = 245\,\Omega$$

$$\boxed{R_g = 245\,\Omega}$$

Question 172

A 2 A current carrying straight metal wire of resistance 1Ω, resistivity $2 \times 10^{-6}\Omega\ \mathrm{m}$, area of cross-section $10\ \mathrm{mm}^2$ and mass 500 g is suspended horizontally in mid air by applying a uniform magnetic field $\vec{B}$. The magnitude of B is $\times 10^{-1}$ T (given, $\mathrm{g} = 10\ \mathrm{m/s^2}$)

Numerical answer: _____

Enter the requested value (an integer; 0 decimal places). Use the units and scaling stated in the question.

Correct answer: 5

Source solution

$\mathrm{R} = \frac{\rho\ell}{\mathrm{A}} \Rightarrow \frac{2\times10^{-6}\times\ell}{10^{-5}} = 1 \Rightarrow \ell = 5$

$\mathrm{mg} = \mathrm{Bi}\ell$

$\mathrm{B} = \frac{\mathrm{mg}}{i\ell} = \frac{5}{2\times5} = 0.5 = 5 \times 10^{-1}$ Tesla

Question 173

The value of net resistance of the network as shown in the given figure is :

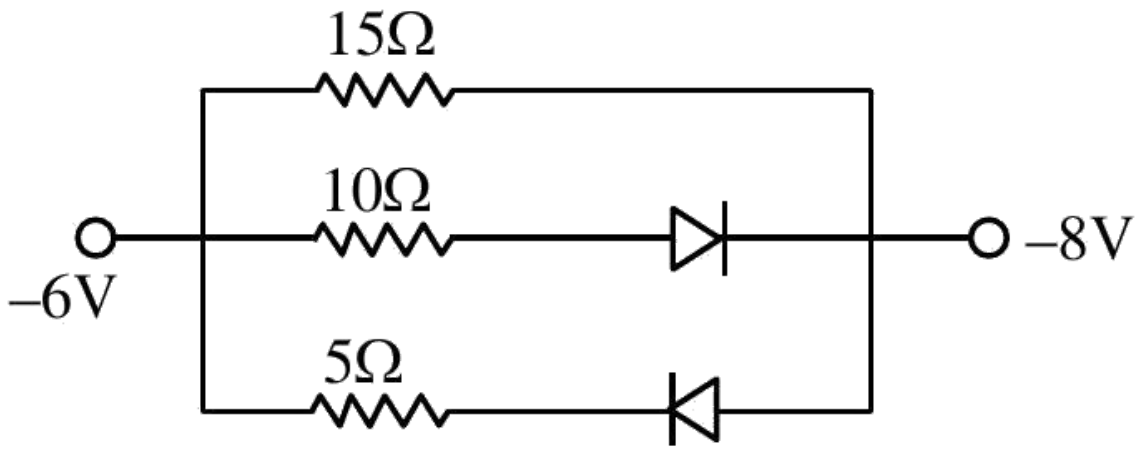

A. $\left(\frac{5}{2}\right)\Omega$

B. $\left(\frac{15}{4}\right)\Omega$

C. 6Ω

D. $\left(\frac{30}{11}\right)\Omega$

Correct answer: C

Source solution

Diode 2 is in reverse bias, so current will not flow in the branch of the 2nd diode. Thus, we can assume it to be a broken wire. Diode 1 is in forward bias, so it will behave like a conducting wire. The new circuit will be

$$R_{\text{eq}} = \frac{15 \cdot 10}{15 + 10} = \frac{15 \cdot 10}{25} = 6\,\Omega$$

Correct answer (3)

Question 174

A potentiometer wire of length 10 m and resistance 20Ω is connected in series with a 25 V battery and an external resistance 30Ω. A cell of emf E in secondary circuit is balanced by 250 cm long potentiometer wire. The value of E (in volt) is $\frac{x}{10}$. The value of x is .

Numerical answer: _____

Enter the requested value (an integer; 0 decimal places). Use the units and scaling stated in the question.

Correct answer: 25

Source solution

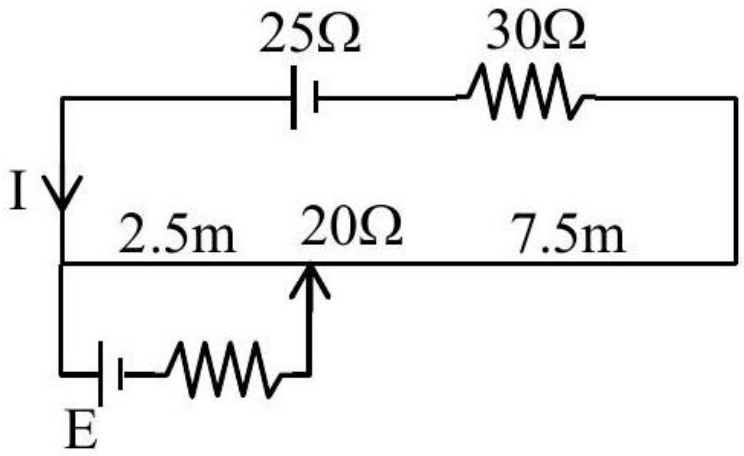

$I = \frac{25}{50} = \frac{1}{2}A$
$\therefore \Delta V = 10\ V$
$10\ m \rightarrow 10\ V$
$2.5\ m \rightarrow 2.5\ V$

Question 175

Two identical cells each of emf 1.5 V are connected in parallel across a parallel combination of two resistors each of resistance 20Ω. A voltmeter connected in the circuit measures 1.2 V . The internal resistance of each cell is

A. 2.5Ω

B. 4Ω

C. 5Ω

D. 10Ω

Correct answer: C

Source solution

$$\mathrm{V}=\mathrm{E}-\frac{\mathrm{i}r}{2}$$

$$1.2=1.5-\mathrm{i}\left(\frac{r}{2}\right)$$

$$\mathrm{i}\frac{r}{2}=0.3$$

$$\mathrm{i}=\frac{1.5}{10+\frac{r}{2}} \Rightarrow 10\mathrm{i}+\frac{\mathrm{i}r}{2}=1.5$$

$$10\mathrm{i}=1.5-0.3$$

$$\mathrm{i}=0.12\,\mathrm{A}$$

$$\Rightarrow r=\frac{0.6}{0.12}=5\,\Omega$$

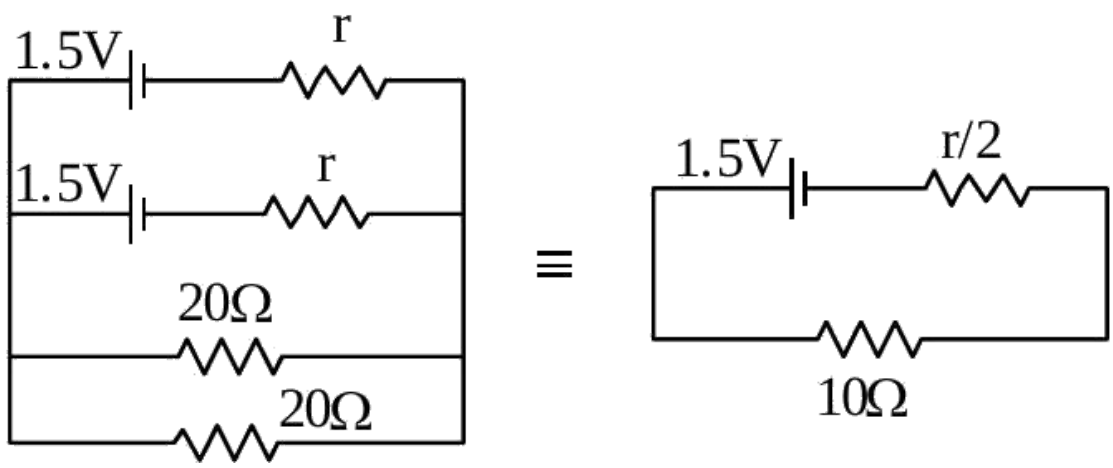
1.5V
r
1.5V
r
20Ω
20Ω
≡
1.5V
r/2
10Ω

Question 176

A $\mathbf{220\ V, 50\ Hz}$ AC source is connected to a 25 V , 5 W lamp and an additional resistance R in series (as shown in figure) to run the lamp at its peak brightness, then the value of R (in ohm) will be

.

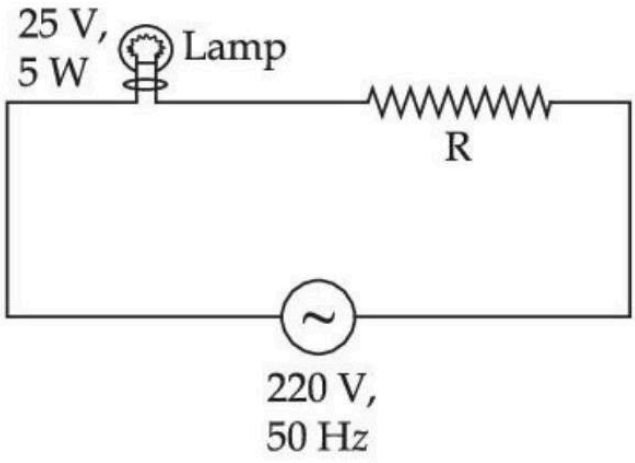

Numerical answer: _____

Enter the requested value (an integer; 0 decimal places). Use the units and scaling stated in the question.

Correct answer: 975

Source solution

$$\mathbf{P = Vi}$$
$$\mathbf{5 = 25i}$$
$$i = \tfrac{1}{5}$$
$$V_R = iR$$
$$(220 - 25) = \tfrac{1}{5}R$$
$$R = 195 \times 5 = 975\Omega$$

Question 177

Current measured by the ammeter (A) in the reported circuit when no current flows through 10Ω resistance. will be A.

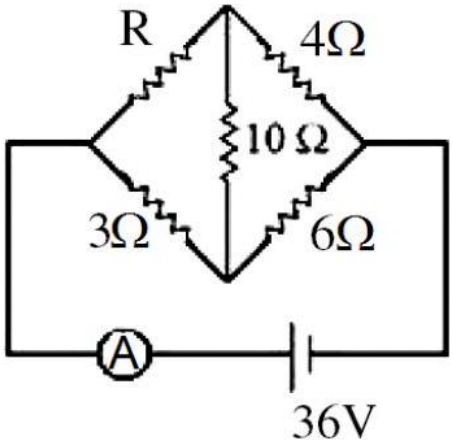

Numerical answer: _____

Enter the requested value (an integer; 0 decimal places). Use the units and scaling stated in the question.

Correct answer: 10

Source solution

Using the condition of a balanced wheat stone bridge,

$\Rightarrow \frac{R}{3} = \frac{4}{6} \Rightarrow R = 2\Omega$

So the effective resistance of the circuit is

$R_{eq} = \frac{6\times 9}{6+9} = \frac{18}{5}\Omega$

$i = \frac{36}{R_{eq}} = 10\ A$

Question 178

A $\mathbf{110\ V, 50\ Hz, AC}$ source is connected in the circuit (as shown in figure). The current through the resistance $\mathbf{55\Omega}$, at resonance in the circuit, will be A.

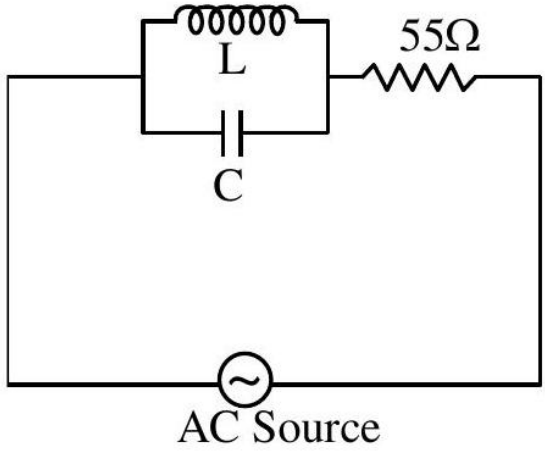

Numerical answer: _____

Enter the requested value (an integer; 0 decimal places). Use the units and scaling stated in the question.

Correct answer: 0

Source solution

At resonance $I_L = I_C$

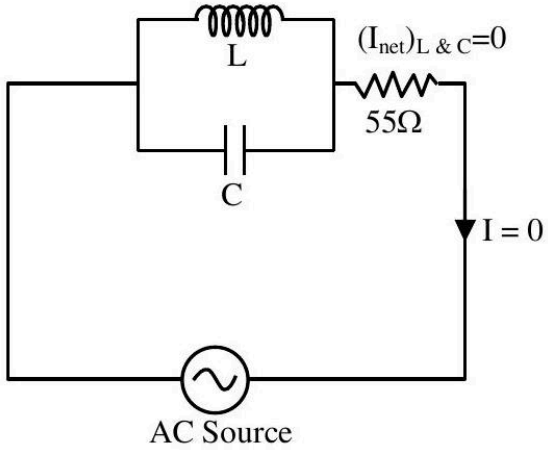

Alternatively,

$$\frac{1}{Z} = \sqrt{\left(\frac{1}{X_L} - \frac{1}{X_C}\right)^2}$$

At resonance, $\mathbf{X_L = X_C \& Z \to \infty}$
$\therefore \mathbf{Z_{total\ circuit} \to \infty}$ i.e, $\mathbf{I = 0}$

Ans. 0

Question 179

The variation of applied potential and current flowing through a given wire is shown in figure. The length of wire is 31.4 cm . The diameter of wire is measured as 2.4 cm . The resistivity of the given wire is measured as $\mathbf{x \times 10^{-3} \Omega\ cm}$. The value of x is [Take $\pi = 3.14$]

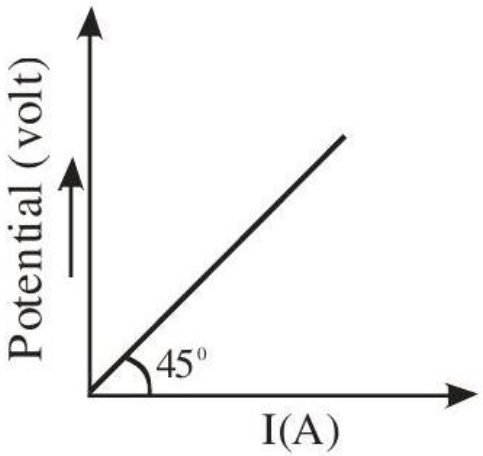

Numerical answer: _____

Enter the requested value (an integer; 0 decimal places). Use the units and scaling stated in the question.

Correct answer: 144

Source solution

$$1 = \rho\frac{\ell}{A}$$
$$1 = \frac{\rho \times 31.4}{\frac{\pi(2.4)^2}{4}}$$
$$\frac{\pi(2.4)^2}{4} = \rho \times 314$$
$$\frac{2.4 \times 2.4}{4} = \rho \times 10$$
$$\frac{0.6 \times 2.4}{10} = \rho$$
$$\frac{1.44}{10} = \rho$$
$$0.144 = \rho$$
$$144 \times 10^{-3} = \rho$$

Question 180

All resistances in figure are 1Ω each. The value of current ' I ' is $\frac{a}{5}$ A. The value of a is

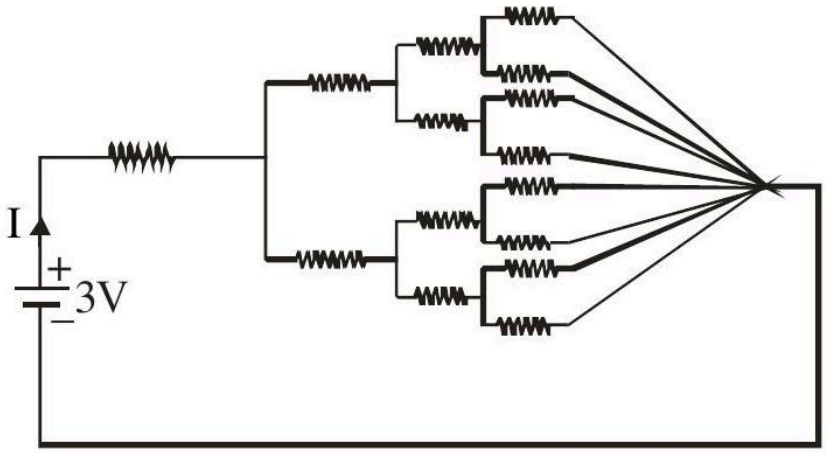

Numerical answer: _____

Enter the requested value (an integer; 0 decimal places). Use the units and scaling stated in the question.

Correct answer: 8

Source solution

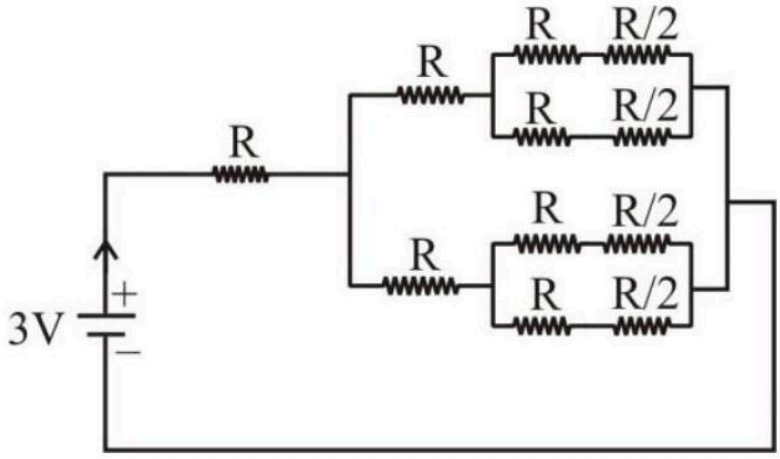

$R_{eq} = \frac{15R}{8} = \frac{15}{8}\Omega$

$I = \frac{3}{\frac{15}{8}} = \frac{8}{5}A$

$\therefore \quad a = 8$

Question 181

The length of a given cylindrical wire is increased to double of its original length. The percentage increase in the resistance of the wire will be

%.

Numerical answer: _____

Enter the requested value (an integer; 0 decimal places). Use the units and scaling stated in the question.

Correct answer: 300

Source solution

$$V' = V$$
$$\ell' \mathrm{A} = \ell \mathrm{A}$$
$$2\ell\, \mathrm{A}' = \ell \mathrm{A}$$
$$\mathrm{A}' = \frac{\mathrm{A}}{2}$$

$$\mathrm{R} = \rho \frac{\ell}{\mathrm{A}} \quad \text{(i)}$$

$$\ell' = 2\ell$$
$$\mathrm{A}' = \frac{\mathrm{A}}{2}$$
$$\mathrm{R}' = \frac{\rho \ell'}{\mathrm{A}'} = \frac{\rho 2\ell}{\frac{\mathrm{A}}{2}}$$
$$\mathrm{R}' = \frac{4\rho\ell}{\mathrm{A}}$$
$\mathrm{R}' = 4\mathrm{R}$ from equation (i)

% increase in resistance

$$= \frac{\mathrm{R}' - \mathrm{R}}{\mathrm{R}} \times 100 = \frac{4\mathrm{R} - \mathrm{R}}{\mathrm{R}} \times 100$$
$$= 300\%$$

Question 182

In the given circuit ' a ' is an arbitrary constant. The value of m for which the equivalent circuit resistance is minimum, will be $\sqrt{\frac{x}{2}}$. The value of x is .

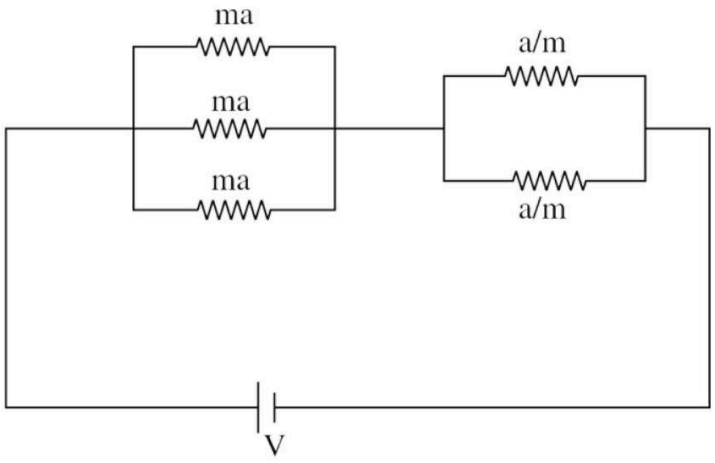

Numerical answer: _____

Enter the requested value (an integer; 0 decimal places). Use the units and scaling stated in the question.

Correct answer: 3

Source solution

$$\mathrm{R} = \left(\frac{\mathrm{ma}}{3}\right) + \left(\frac{\mathrm{a}}{2\,\mathrm{m}}\right)$$
$$\frac{\mathrm{dR}}{\mathrm{dm}} = \frac{\mathrm{a}}{3} - \frac{\mathrm{a}}{2\,\mathrm{m}^2} = 0$$
$$\frac{a}{3} = \frac{a}{2m^2}$$
$$\mathrm{m}^2 = \frac{3}{2}$$
$$\mathrm{m} = \sqrt{\frac{3}{2}}$$
$$\mathrm{x} = 3$$

Question 183

A cell, shunted by a 8Ω resistance, is balanced across a potentiometer wire of length 3 m . The balancing length is 2 m when the cell is shunted by 4Ω resistance. The value of internal resistance of the cell will be Ω.

Numerical answer: _____

Enter the requested value (an integer; 0 decimal places). Use the units and scaling stated in the question.

Correct answer: 8

Source solution

$\frac{V_1}{V_2} = \frac{3}{2} = \frac{E - i_1 r}{E - i_2 r}$

$= \frac{E - \frac{E}{8+r} \times r}{E - \frac{E}{4+r} \times r}$

$\frac{3}{2} = \frac{8(4+r)}{4(8+r)}$

$24 + 3r = 16 + 4r$

$r = 8\Omega$

Question 184

Two resistors are connected in series across a battery as shown in figure. If a voltmeter of resistance 2000Ω is used to measure the potential difference across 500Ω resister, the reading of the voltmeter will be V.

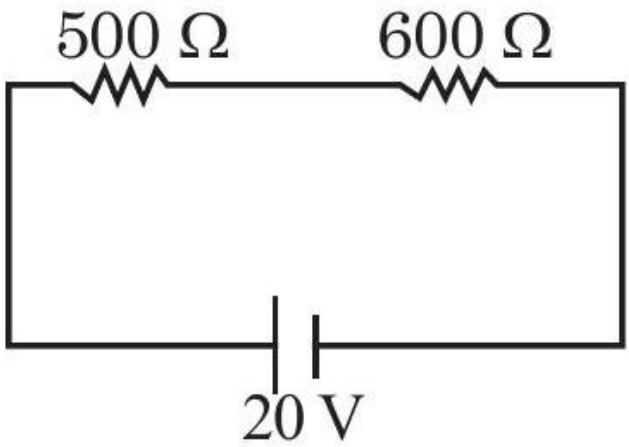

Numerical answer: _____

Enter the requested value (an integer; 0 decimal places). Use the units and scaling stated in the question.

Correct answer: 8

Source solution

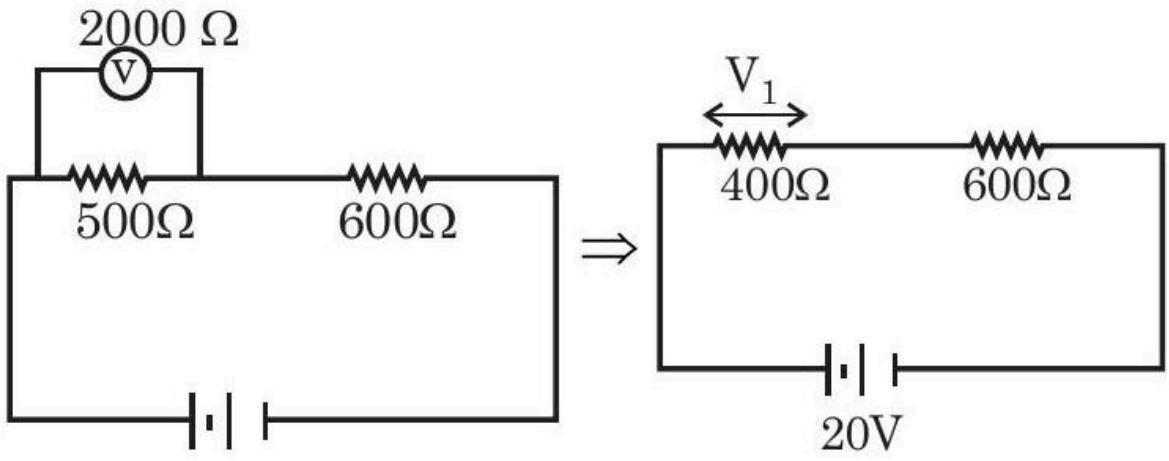

$I = \frac{20}{1000} A$

$\mathrm{V_1} = \mathrm{I} \times 400 = \frac{20}{1000} \times 400$

$= 8\ \mathrm{V}$

Question 185

In this figure the resistance of the coil of galvanometer G is 2Ω. The emf of the cell is 4 V . The ratio of potential difference across C_1 and C_2 is:

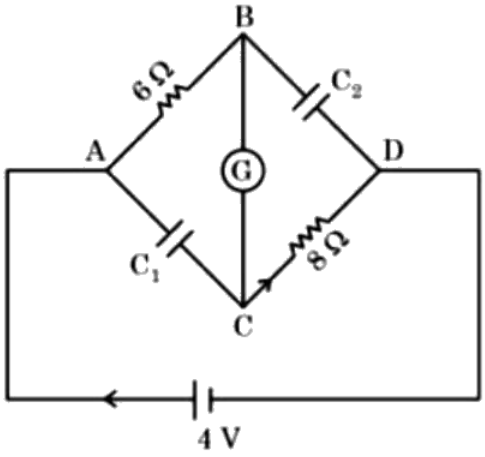

A. 1

B. $\frac{4}{5}$

C. $\frac{3}{4}$

D. $\frac{5}{4}$

Correct answer: B

Source solution

At steady state, the current in the circuit is

$$i = \frac{4\,V}{6+2+8} = \frac{1}{4}\,A$$

The voltage across C_1 is

$$V_1 = V_{AC} = i \cdot (6\,\Omega + 2\,\Omega) = \frac{1}{4} \cdot 8 = 2\,V$$

The voltage across C_2 is

$$V_2 = V_{BD} = i \cdot (2\,\Omega + 8\,\Omega) = \frac{1}{4} \cdot 10 = 2.5\,V$$

$$\Rightarrow \frac{V_1}{V_2} = \frac{2}{2.5} = \frac{4}{5}$$

Question 186

When a resistance of 5Ω is shunted with a moving coil galvanometer, it shows a full scale deflection for a current of 250 mA , however when 1050Ω resistance is connected with it in series, it gives full scale deflection for 25 volt. The resistance of galvanometer is Ω.

Numerical answer: _____

Enter the requested value (an integer; 0 decimal places). Use the units and scaling stated in the question.

Correct answer: 50

Source solution

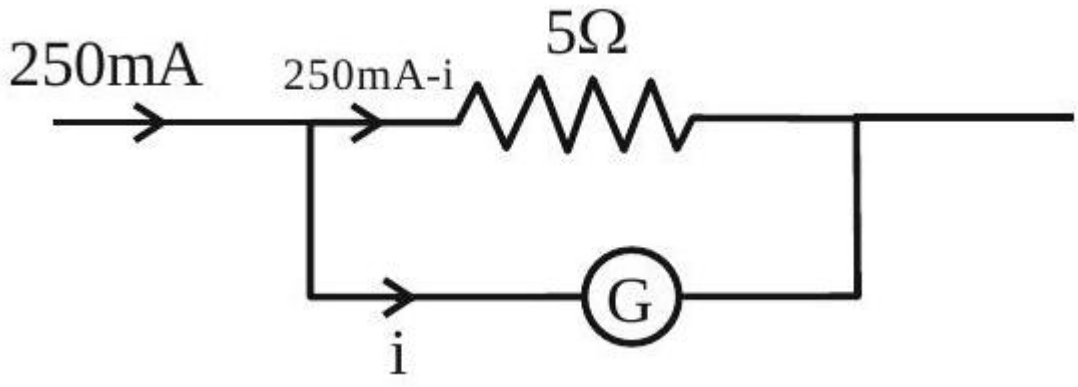

$$\frac{250mA \times 5}{5 + R_G} = i \quad \text{(i)}$$

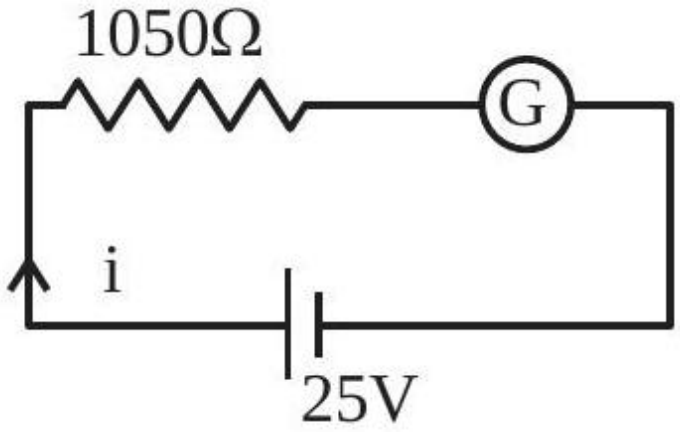

$$i = \frac{25}{1050 + R_G} \quad \text{(ii)}$$

From (i) and (ii)

$$\frac{25}{1050 + R_G} = \frac{5}{4\,(5 + R_G)}$$
$$100\,(5 + R_G) = 1050 \times 5 + R_G \times 5$$
$$95R_G = 4750$$
$$R_G = 50\Omega$$

Question 187

Two identical cells each of emf 1.5 V are connected in series across a 10Ω resistance. An ideal voltmeter connected across 10Ω resistance reads 1.5 V . The internal resistance of each cell is
Ω.

Numerical answer: _____

Enter the requested value (an integer; 0 decimal places). Use the units and scaling stated in the question.

Correct answer: 5

Source solution

$$\mathrm{V} = \mathrm{I} \times 10$$
$$1.5 = \left(\frac{3}{10+2\mathrm{r}}\right) \times 10$$
$$\mathrm{r} = 5\Omega$$

Question 188

A 1 m long metal rod XY completes the circuit as shown in figure. The plane of the circuit is perpendicular to the magnetic field of flux density 0.15 T . If the resistance of the circuit is 5Ω, the force needed to move the rod in direction, as indicated, with a constant speed of $4\ \mathrm{m/s}$ will be

10^{-3} N.

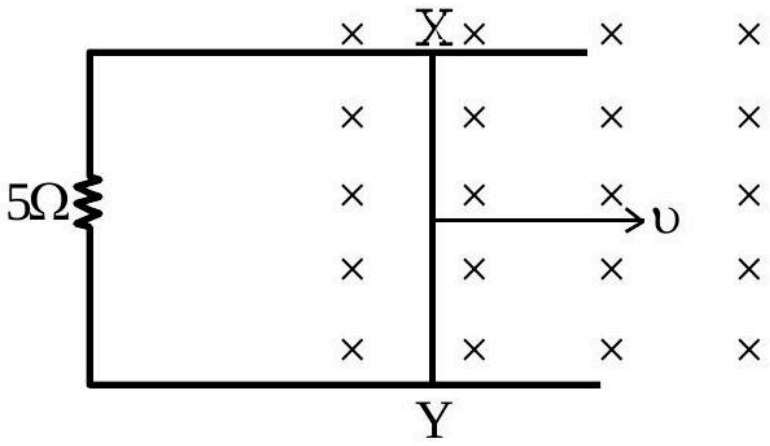

Numerical answer: _____

Enter the requested value (an integer; 0 decimal places). Use the units and scaling stated in the question.

Correct answer: 18

Source solution

$$\mathrm{F} = \mathrm{i}\ell\mathrm{B}$$
$$= \left(\frac{\varepsilon}{\mathrm{R}}\right)\ell\mathrm{B} = \left(\frac{\mathrm{vB}\ell}{\mathrm{R}}\right)\ell\mathrm{B} = \frac{\mathrm{vB}^2\ell^2}{\mathrm{R}} = \frac{4}{5} \times \left(\frac{15}{100}\right)^2 \times 1^2$$
$$= \frac{4}{5} \times \frac{225}{10^4}$$
$$= \frac{180}{10^4} = 0.018\ \mathrm{N}$$
$$= 18 \times 10^{-3}\ \mathrm{N}$$

Question 189

An insulated copper wire of 100 turns is wrapped around a wooden cylindrical core of the crosssectional area $24\ \mathrm{cm}^2$. The two ends of the wire are connected to a resistor. The total resistance in the circuit is 12Ω. If an externally applied uniform magnetic field in the core along its axis changes from 1.5 T in one direction to 1.5 T in the opposite direction, the charge flowing through a point in the circuit during the change of magnetic field will be
mC .

Numerical answer: _____

Enter the requested value (an integer; 0 decimal places). Use the units and scaling stated in the question.

Correct answer: 60

Source solution

$\Delta Q = -\frac{\Delta\phi}{R} = -\left(\frac{\phi_2-\phi_1}{R}\right)$
$\phi_1 = NBA$
$\phi_2 = -NBA$
$\therefore \Delta Q = \frac{2NBA}{R} = \frac{2\times100\times1.5\times24\times10^{-4}}{12}$
$= 6\times10^{-2}C = 60mC$

Question 190

The length of a metallic wire is increased by 20% and its area of cross section is reduced by 4%. The percentage change in resistance of the metallic wire is .

Numerical answer: _____

Enter the requested value (an integer; 0 decimal places). Use the units and scaling stated in the question.

Correct answer: 25

Source solution

$R = \rho\frac{\ell}{A}$ be the initial resistance new resistance $R' = \rho\frac{1.2\ell}{0.96\ A} = 1.25\rho\frac{\ell}{A} = 1.25R$
percentage change $= \frac{1.25R-R}{R}\times100 = 25\%$

Question 191

Two cells of emf 1 V and 2 V and internal resistance 2Ω and 1Ω, respectively, are connected in series with an external resistance of 6Ω. The total current in the circuit is I_1. Now the same two cells in parallel configuration are connected to same external resistance. In this case, the total current drawn is I_2. The value of $\left(\frac{I_1}{I_2}\right)$ is $\frac{x}{3}$. The value of x is .

Numerical answer: _____

Enter the requested value (an integer; 0 decimal places). Use the units and scaling stated in the question.

Correct answer: 4

Source solution

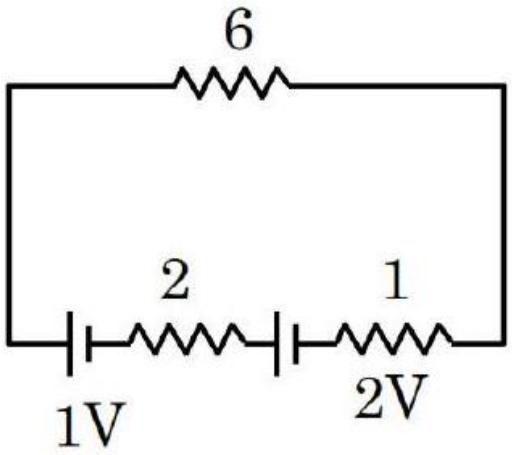

$\varepsilon_{eq} = 3$
$R_{eq} = 9$
$i_1 = \frac{3}{9} = \frac{1}{3}$

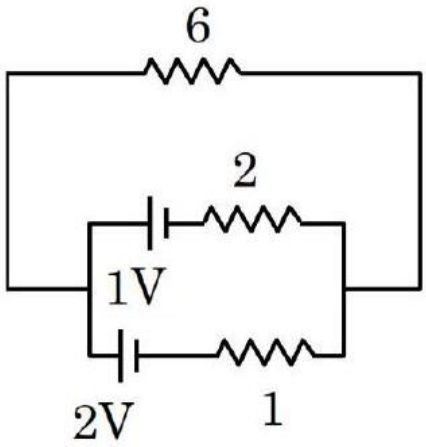

$$\varepsilon_{eq} = \frac{\frac{\varepsilon_1}{r_1}+\frac{\varepsilon_2}{r_2}}{\frac{1}{r_1}+\frac{1}{r_2}}$$
$$\varepsilon_{eq} = \frac{\frac{1}{2}+\frac{2}{1}}{\frac{1}{2}+\frac{1}{1}} = \frac{5}{3}$$
$$r_{equ} = \frac{2\times1}{3} + 6 = \frac{20}{3}$$
$$i_2 = \frac{1}{4} \Rightarrow \frac{i_1}{i_2} = \frac{4}{3}$$

Moving Charges and Magnetism

Questions 192-205 / 14 selected / 4.7% practice weight / Focus first

Question 192

A solenoid of 1200 turns is wound uniformly in a single layer on a glass tube 2 m long and 0.2 m in diameter. The magnetic intensity at the center of the solenoid when a current of 2 A flows through it is?

A. $2.4 \times 10^3\ \mathrm{A\,m^{-1}}$

B. $1.2 \times 10^3\ \mathrm{A\,m^{-1}}$

C. $2.4 \times 10^{-3}\ \mathrm{A\,m^{-1}}$

D. $1\ \mathrm{A\,m^{-1}}$

Correct answer: B

Source solution

Sol.

For a long solenoid,

$$B = \mu_0 n I.$$

Given that the magnetic induction is $2B$,

$$2B = \mu_0 n I.$$

Number of turns per unit length:

$$n = \frac{1200}{2} = 600\ \mathrm{m^{-1}}.$$

Magnetic field intensity is

$$H = \frac{B}{\mu_0} = nI.$$

Substituting,

$$H = 600 \times 2.$$

$$H = 1200 \ \text{A m}^{-1}.$$

$$\boxed{H = 1.2 \times 10^{3} \ \text{A m}^{-1}}$$

Question 193

A particle of charge q , mass m and kinetic energy E enters in magnetic field perpendicular to its velocity and undergoes a circular arc of radius(r). Which of the following curves represents the variation of r with E ?

A.

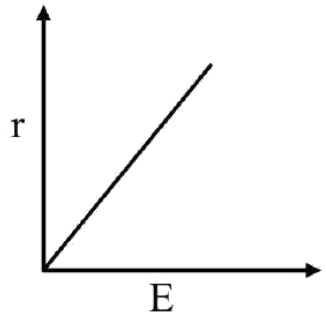

B.

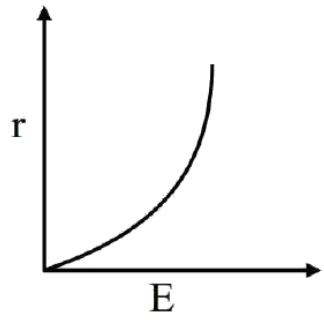

C.

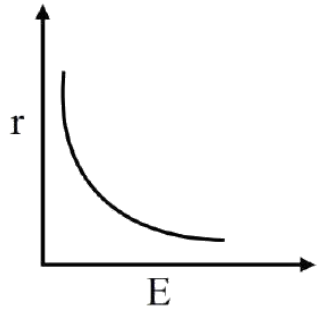

D.

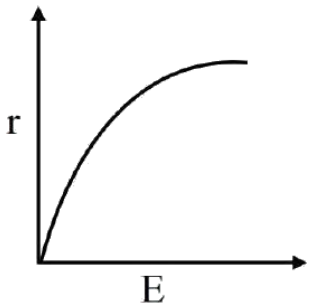

Correct answer: D

Source solution

Sol.

$$\frac{mv^2}{r} = qvB$$

$$mv = qBr$$

$$E = \frac{1}{2}mv^2$$

$$E = \frac{1}{2}m\left(\frac{q^2B^2r^2}{m^2}\right) = \frac{q^2B^2r^2}{2m}$$

$$E = \left(\frac{q^2B^2}{2m}\right)r^2$$

$$r^2 \propto E$$

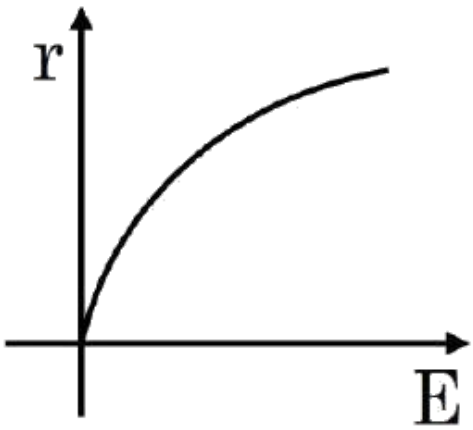

Question 194

Two particles X and Y having equal charges are being accelerated through the same potential difference. Thereafter they enter normally in a region of uniform magnetic field and describes circular paths of radii R_1 and R_2 respectively. The mass ratio of X and Y is :

A. $\left(\frac{R_2}{R_1}\right)^2$

B. $\left(\frac{R_1}{R_2}\right)^2$

C. $\left(\frac{R_1}{R_2}\right)$

D. $\left(\frac{R_2}{R_1}\right)$

Correct answer: B

Source solution

$$R = \frac{mv}{qB} = \frac{p}{qB} = \frac{\sqrt{2m \cdot KE}}{qB} = \frac{\sqrt{2mqV}}{qB}$$

$R \propto \sqrt{m}$

$m \propto R^2$

$$\frac{m_1}{m_2} = \left(\frac{R_1}{R_2}\right)^2$$

Question 195

Two long parallel wires X and Y, separated by a distance of 6 cm , carry currents of 5 A and 4 A , respectively, in opposite directions as shown in the figure. Magnitude of the resultant magnetic field at point P at a distance of 4 cm from wire Y is $\mathbf{x} \times 10^{-5}$ T. The value of x is . Take permeability of free space as $\mu_0 = 4\pi \times 10^{-7}$ SI units.

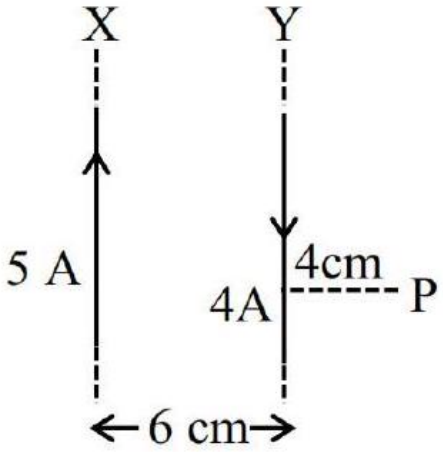

Numerical answer: _____

Enter the requested value (an integer; 0 decimal places). Use the units and scaling stated in the question.

Correct answer: 1

Source solution

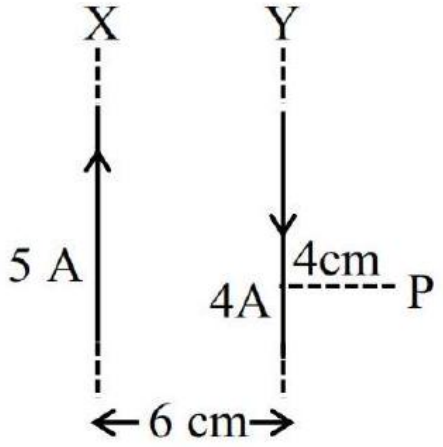

$\mathrm{B} = \frac{\mu_0(5)}{2\pi \times .01} - \frac{\mu_0 4}{2\pi \times 0.04}$
$= -\frac{100\mu_0}{4\pi}$

$= -100 \times 10^{-7}$
$= -1 \times 10^{-5}\ \mathrm{T}$

Question 196

A sing1y ionized magnesium atom (A24) ion is accelerated to kinetic energy 5 keV and is projected perpendicularly into a magnetic field B of the magnitude 0.5 T . The radius of path formed will be cm.

Numerical answer: _____

Enter the requested value (an integer; 0 decimal places). Use the units and scaling stated in the question.

Correct answer: 10

Source solution

$\mathrm{R} = \frac{\mathrm{mv}}{\mathrm{qB}} = \frac{\sqrt{2\mathrm{mK}}}{\mathrm{qB}}$

Question 197

A 4.0 cm long straight wire carrying a current of 8 A is placed perpendicular to an uniform magnetic field of strength 0.15 T . The magnetic force on the wire is mN .

Numerical answer: _____

Enter the requested value (an integer; 0 decimal places). Use the units and scaling stated in the question.

Correct answer: 48

Source solution

$\mathrm{F} = \mathrm{I}\ell\mathrm{B}$
$= 8 \times \frac{4}{100} \times 0.15$
$= 48 \times 10^{-3}\ \mathrm{N} = 48\mathrm{mN}$

Question 198

A uniform magnetic field B exists in a direction perpendicular to the plane of a square loop made of a metal wire. The wire has a diameter of 4 mm and a total length of 30 cm . The magnetic field changes with time at a steady rate $\mathrm{dB/dt} = 0.032\mathrm{Ts}^{-1}$. The induced current in the loop is close to (Resistivity of the metal wire is $1.23 \times 10^{-8}\Omega\,\mathrm{m}$)

A. 0.53 A

B. 0.61 A

C. 0.34 A

D. 0.43 A

Correct answer: B

Source solution

$$\phi = \mathrm{BA}$$

$$E = \frac{d\phi}{dt} = \frac{A\,dB}{dt}$$

$$E = \ell^2 \frac{dB}{dt}$$

$$i = \frac{E}{R} = \frac{\ell^2}{\rho\ell}\frac{dB}{dt}A$$

$$i = -\frac{30}{4} \times \frac{30}{4} \times \frac{10^{-4} \times 0.032 \times 4 \times 10^{-6} \times \pi}{1.23 \times 10^{-8} \times 30 \times 10^{-2} \times 10^{3}}$$

$$i = \frac{240\pi \times 10^{-10}}{1.23 \times 10^{-7}}$$

$$i = \frac{240 \times 3.14 \times 10^{-3}}{1.23} = \frac{753.6}{1.23} \times 10^{-3}$$

$$i = 612.68 \times 10^{-3} = 0.61\,\mathrm{A}$$

Question 199

A moving coil galvanometer has 100 turns and each turn has an area of $2.0\ \mathrm{cm}^2$. The magnetic field produced by the magnet is 0.01 T and the deflection in the coil is 0.05 radian when a current of 10 mA is passed through it. The torsional constant of the suspension wire is $x \times 10^{-5}\ \mathrm{N-m/rad}$. The value of x is

.

Numerical answer: _____

Enter the requested value (an integer; 0 decimal places). Use the units and scaling stated in the question.

Correct answer: 4

Source solution

$\tau = \mathrm{BINA}\sin\phi$

$\mathrm{C}\theta = \mathrm{BINA}\sin 90^\circ$

$\mathrm{C} = \frac{\mathrm{BINA}}{\theta} = \frac{0.01\times 10\times 10^{-3}\times 100\times 2\times 10^{-4}}{0.05}$

$= 4 \times 10^{-5}\ \mathrm{N-m/rad}.$

$\mathrm{x} = 4$

Question 200

A coil having 100 turns, area of $5 \times 10^{-3}\ \mathrm{m}^2$, carrying current of 1 mA is placed in uniform magnetic field of 0.20 T such a way that plane of coil is perpendicular to the magnetic field. The work done in turning the coil through 90° is $\mu\mathrm{J}$.

Numerical answer: _____

Enter the requested value (an integer; 0 decimal places). Use the units and scaling stated in the question.

Correct answer: 100

Source solution

$$W = \Delta U = U_f - U_i$$
$$\mathrm{W} = (-\vec{\mu} \cdot \overrightarrow{\mathrm{B}})_{\mathrm{f}} - (-\vec{\mu} \cdot \overrightarrow{\mathrm{B}})_{\mathrm{i}}$$
$$= 0 + (\vec{\mu} \cdot \overrightarrow{\mathrm{B}})_{\mathrm{i}}$$
$$= \left(100 \times 5 \times 10^{-3} \times 1 \times 10^{-3}\right) \times 0.2\ \mathrm{J}$$
$$= 1 \times 10^{-4}\ \mathrm{J} = 100\mu\ \mathrm{J}$$

Question 201

A solenoid of length 0.5 m has a radius of 1 cm and is made up of ' m ' number of turns. It carries a current of 5 A . If the magnitude of the magnetic field inside the solenoid is $6.28 \times 10^{-3}\ \mathrm{T}$, then the value of m is :

Numerical answer: _____

Enter the requested value (an integer; 0 decimal places). Use the units and scaling stated in the question.

Correct answer: 500

Source solution

$\mu_0 ni = B \quad n =$ number of turns per unit length $\mu_0 \left(\frac{m}{\ell}\right) i = B$

$$\mathrm{m} = \frac{\mathrm{B} \cdot \ell}{\mu_0 \mathrm{i}} = \frac{6.28 \times 10^{-3} \times 0.5}{12.56 \times 10^{-7} \times 5}$$
$$\mathrm{m} = 500$$

Question 202

An emf of 0.08 V is induced in a metal rod of length 10 cm held normal to a uniform magnetic field of 0.4 T , when moves with a velocity of:

A. $2\ \mathrm{ms}^{-1}$

B. $3.2\ \mathrm{ms}^{-1}$

C. $0.5\ \mathrm{ms}^{-1}$

D. $20\ \mathrm{ms}^{-1}$

Correct answer: A

Source solution

Sol.

Induced emf is

$$\mathcal{E} = Blv.$$

Given,

$$\mathcal{E} = 0.08\ \mathrm{V}, \quad B = 0.4\ \mathrm{T}, \quad l = \frac{10}{100} = 0.1\ \mathrm{m}.$$

Therefore,

$$0.08 = 0.4 \times 0.1 \times v.$$

$$v = \frac{0.08}{0.04} = 2\ \mathrm{m/s}.$$

$$\boxed{v = 2\ \mathrm{m/s}}$$

Question 203

A straight wire AB of mass 40 g and length 50 cm is suspended by a pair of flexible leads in uniform magnetic field of magnitude 0.40 T as shown in the figure. The magnitude of the current required in the wire to remove the tension in the supporting leads is A. (Take $\mathbf{g = 10\ ms^{-2}}$).

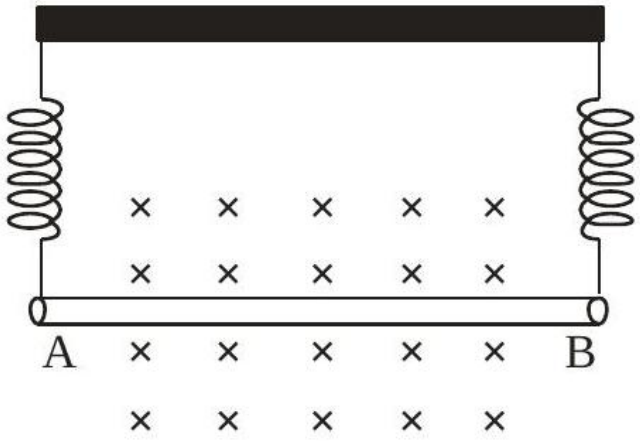

Numerical answer: _____

Enter the requested value (an integer; 0 decimal places). Use the units and scaling stated in the question.

Correct answer: 2

Source solution

For equilibrium

$\mathbf{Mg = I\ell B}$

$\mathbf{I = \frac{mg}{\ell B} = \frac{40\times10^{-3}\times10}{50\times10^{-2}\times0.4} = 2\ A}$

Question 204

A 20 cm long metallic rod is rotated with 210 rpm about an axis normal to the rod passing through its one end. The order end of the rod is in contact with a circular metallic ring. A constant and uniform magnetic field 0.2 T parallel to the axis exists everywhere. The emf developed between the centre and the ring is mV .

Take $\pi = \frac{22}{7}$

Numerical answer: _____

Enter the requested value (an integer; 0 decimal places). Use the units and scaling stated in the question.

Correct answer: 88

Source solution

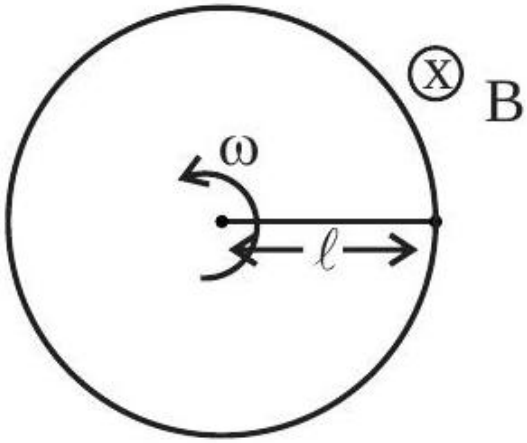

Here $\omega = 210\text{rpm}$
$= 210 \times \frac{2\pi}{60}\text{rad/s}$
$\Rightarrow \omega = 7\pi\text{rad/s}$
$\&\ell = 0.2\ \text{m}$
$\&\ \text{B} = 0.2\ \text{T}$
emf developed across rod is $= \frac{1}{2}\ \text{B}\omega\ell^2$
$\frac{1}{2} \times 0.2 \times 7\pi \times (0.2)^2$
$= 88\text{mV}$

Question 205

A straight wire carrying a current of 14 A is bent into a semicircular are of radius 2.2 cm as shown in the figure. The magnetic field produced by the current at the centre (O) of the arc. is $\quad \times 10^{-4}\ \mathrm{T}$

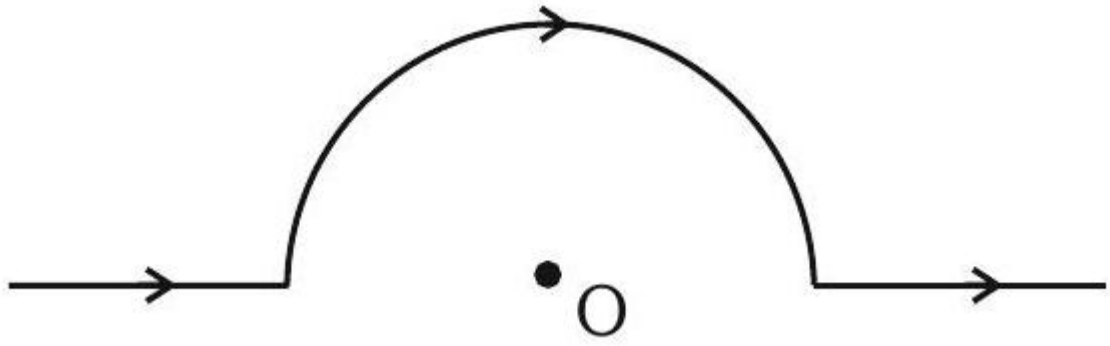

Numerical answer: _____

Enter the requested value (an integer; 0 decimal places). Use the units and scaling stated in the question.

Correct answer: 2

Source solution

$$B_{\text{at } O} = \frac{\mu_0 I}{4R} = \frac{4\pi \times 10^{-7} \times 14}{4 \times 2.2 \times 10^{-2}} = 2 \times 10^{-4}\ \mathrm{T}$$

Magnetism and Matter

Questions 206-206 / 1 selected / 0.3% practice weight / Consolidate

Question 206

The current required to be passed through a solenoid of 15 cm length and 60 turns in order to demagnetise a bar magnet of magnetic intensity $2.4 \times 10^3 \mathrm{Am}^{-1}$ is A.

Numerical answer: _____

Enter the requested value (an integer; 0 decimal places). Use the units and scaling stated in the question.

Correct answer: 6

Source solution

$I = H$

Given, $\mathrm{I} = 2.4 \times 10^3\ \mathrm{A/m}$

$2.4 \times 10^3 = \mathrm{H} = \mathrm{ni}$

$\mathrm{n} = \frac{\mathrm{N}}{\ell}$

$2.4 \times 10^3 = \frac{60}{15 \times 10^{-2}} \mathrm{i}$

$\mathrm{i} = \frac{2.4 \times 15 \times 10}{60} = \frac{36}{6} = 6\ \mathrm{A}$

Electromagnetic Induction

Question 207

A simple pendulum made of mass 10 g and a metallic wire of length 10 cm is suspended vertically in a uniform magnetic field of 2 T. The magnetic field direction is perpendicular to the plane of oscillations of the pendulum. If the pendulum is released from an angle of 60° with vertical, then maximum induced EMF between the point of suspension and point of oscillation is

_____

$\mathbf{mV}$. (Take $\mathbf{g = 10\ m/s^2}$)

Numerical answer: _____

Enter an integer. Use the units and scaling requested in the question.

Correct answer: 100

Source solution

$\varepsilon_{\mathbf{max}} = \frac{\mathbf{B\omega_{max}\ell^2}}{\mathbf{2}}$

Using energy conservation,

$$\mathbf{mg\ell(1-\cos 60^\circ) = \frac{1}{2}(m\ell^2)\omega_m^2}$$

$$\omega_{\mathbf{m}} = \sqrt{\frac{\mathbf{g}}{\ell}} = \mathbf{10 rad/s}$$

From eq.(1),

$$\varepsilon_{\mathbf{max}} = \frac{2 \times 10 \times 0.01}{2} = 0.1\ \mathrm{V}$$
$$= \mathbf{100 mV}$$

Question 208

A square loop of side 10 cm and resistance 0.7Ω is placed vertically in east-west plane. A uniform magnetic field of 0.20 T is set up across the plane in north east direction. The magnetic field is decreased to zero in 1 s at a steady rate. Then, magnitude of induced emf is $\sqrt{x} \times 10^{-3}$ V. The value of x is .

Numerical answer: _____

Enter the requested value (an integer; 0 decimal places). Use the units and scaling stated in the question.

Correct answer: 2

Source solution

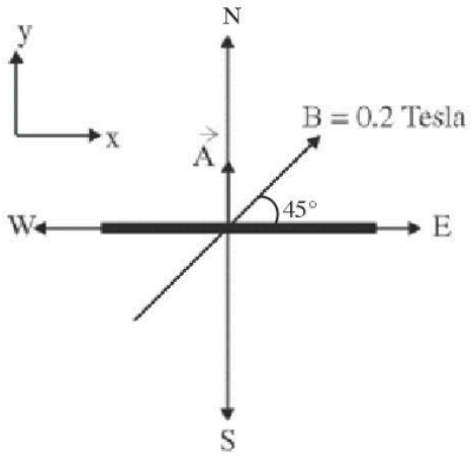

$$\vec{A} = (0.1)^2 \hat{j}$$
$$\vec{B} = \frac{0.2}{\sqrt{2}}\hat{i} + \frac{0.2}{\sqrt{2}}\hat{j}$$

Magnitude of induced emf

$$e = \frac{\Delta\phi}{\Delta t} = \frac{\vec{B}\cdot\vec{A} - 0}{1} = \sqrt{2} \times 10^{-3} \text{ V}$$

Question 209

When a coil is connected across a 20 V dc supply, it draws a current of 5 A. When connected across a 20 V, 50 Hz ac supply, it draws a current of 4 A. The self-inductance of the coil is _____ mH. (Take $\pi = 3$.)

Numerical answer: _____

Enter the requested value (an integer; 0 decimal places). Use the units and scaling stated in the question.

Correct answer: 10

Source solution

The resistance is $R = 20/5 = 4\ \Omega$ and impedance $Z = 20/4 = 5\ \Omega$. Hence $X_L = \sqrt{25 - 16} = 3\ \Omega$ and $L = 3/(2 \times 3 \times 50) = 0.01$ H = 10 mH.

Question 210

In a series LCR circuit, the inductance, capacitance and resistance are $\mathbf{L = 100mH, C = 100\mu\ F}$ and $\mathbf{R = 10\Omega}$ respectively. They are connected to an AC source of voltage 220 V and frequency of 50 Hz . The approximate value of current in the circuit will be A.

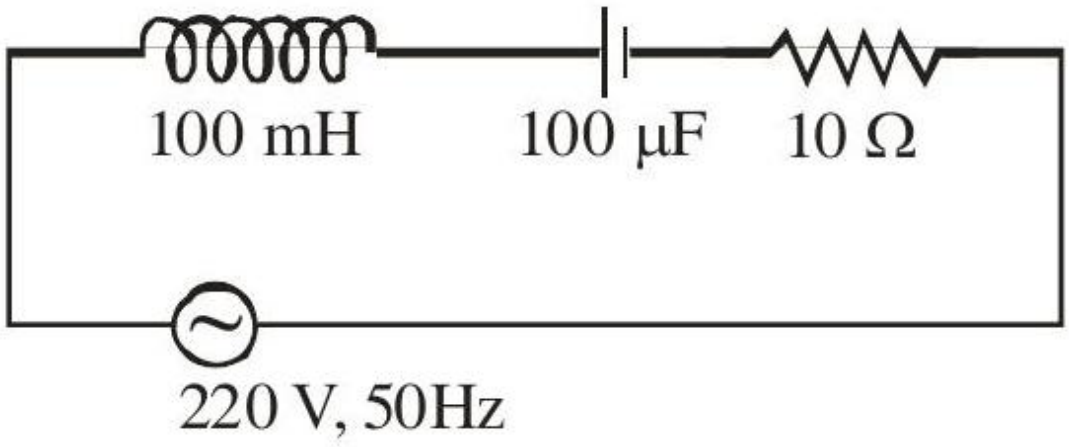

Numerical answer: _____

Enter the requested value (an integer; 0 decimal places). Use the units and scaling stated in the question.

Correct answer: 22

Source solution

$$\mathbf{X_L = \omega L = 2\pi \times 50 \times 10^{-1} = 10\pi}$$

$$\mathbf{X_X = \frac{1}{\omega C} = \frac{1}{2\pi \times 50} \times 10^4 = \frac{100}{\pi}}$$

$$\mathbf{R = 10\Omega}$$

$$\mathbf{Z = \sqrt{\left(10\pi - \frac{100}{\pi}\right)^2 + 10^2} \simeq 10\Omega}$$

$$\mathbf{i = \frac{E}{2} \simeq \frac{220}{10} \simeq 22Amp}$$

Question 211

As shown in the figure an inductor of inductance 200 mH is connected to an AC source of emf 220 V and frequency 50 Hz . The instantaneous voltage of the source is 0 V when the peak value of current is $\frac{\sqrt{a}}{\pi}$ A. The value of a is

.

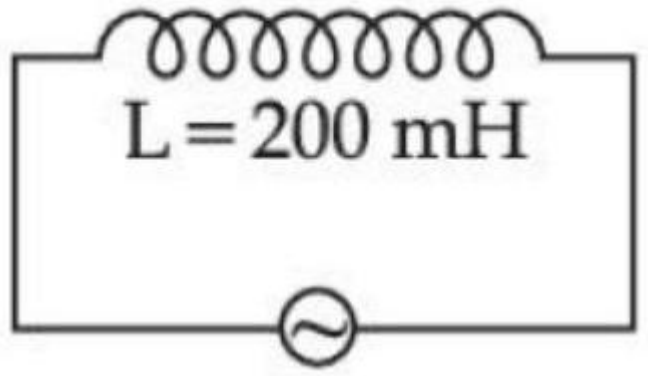

Numerical answer: _____

Enter the requested value (an integer; 0 decimal places). Use the units and scaling stated in the question.

Correct answer: 242

Source solution

$$f = 50\ Hz$$
$$X_L = 2\pi fL$$
$$= 2\pi(50)\left(200 \times 10^{-3}\right)$$
$$= 20\pi\Omega$$
$$i_0 = \frac{V_0}{X_L} \Rightarrow \frac{V_{rms}\sqrt{2}}{X_L}$$
$$= \frac{(220)\sqrt{2}}{20\pi} = \frac{11\sqrt{2}}{\pi}$$
$$i_0 = \frac{\sqrt{242}}{\pi}$$

Question 212

A square loop of side 2.0 cm is placed inside a long solenoid that has 50 turns per centimetre and carries a sinusoidally varying current of amplitude 2.5 A and angular frequency $700 \mathrm{rads}^{-1}$. The central axes of the loop and solenoid coincide. The amplitude of the emf induced in the loop is $\mathrm{x} \times 10^{-4}$ V. The value of x is

(Take, $\pi = \frac{22}{7}$)

Numerical answer: _____

Enter the requested value (an integer; 0 decimal places). Use the units and scaling stated in the question.

Correct answer: 44

Source solution

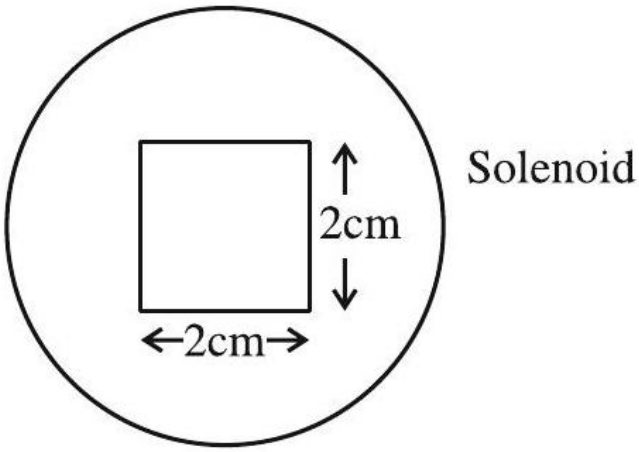

$$\mathrm{B}_{\text{due to solenoid}} = \mu_0 \mathrm{nI}$$
$$\Phi_{\text{through square}} = \mu_0 \mathrm{nI} \times \mathrm{A} \quad (\mathrm{A} = \text{Area})$$
$$\mathrm{Emf} = \mu_0 \mathrm{nA} \times \frac{\mathrm{dI}}{\mathrm{dt}}$$
$$= \mu_0 \mathrm{nA} \times \mathrm{I}_0 \omega \cos \omega t$$
$$\text{Emf amplitude} = \mu_0 \mathrm{nA} \times \mathrm{I}_0 \omega$$

$$= 4\pi \times 10^{-7} \times \frac{50}{10^{-2}} \times 4 \times 10^{-4} \times 2.5 \times 700$$
$$= 44 \times 10^{-4} \text{ V}$$

Question 213

A conducting circular loop is placed in a uniform magnetic field of 0.4 T with its plane perpendicular to the field. Somehow, the radius of the loop starts expanding at a constant rate of $1\ \mathrm{mm/s}$. The magnitude of induced emf in the loop at an instant when the radius of the loop is 2 cm will be

$\mu\mathrm{V}$.

Numerical answer: _____

Enter the requested value (an integer; 0 decimal places). Use the units and scaling stated in the question.

Correct answer: 50

Source solution

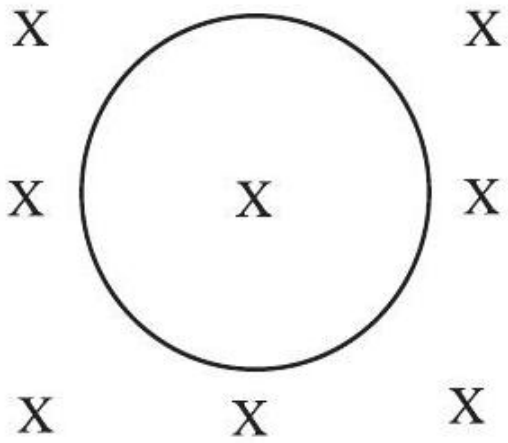

$\frac{dr}{dt} = 10^{-3}\ \mathrm{m/s}$

$\frac{dA}{dt} = 2\pi r\frac{dr}{dt}$

$\varepsilon = \left|\frac{-d\phi}{dt}\right| = \left|\frac{BdA}{dt}\right|$

$= 0.4 \times 2 \times \pi \times 2 \times 10^{-2} \times 10^{-3}\ \mathrm{V}$

$= 16\pi\mu\ \mathrm{V} = 50.24\mu\ \mathrm{V}$

Alternating Current

Questions 214-217 / 4 selected / 1.3% practice weight / Consolidate

Question 214

A bulb and a capacitor are connected in series across an ac supply. A dielectric is then placed between the plates of the capacitor. The glow of the bulb:

A. increases

B. remains same

C. becomes zero

D. decreases

Correct answer: A

Source solution

$$Z = \sqrt{R^2 + X_C^2}$$

$$X_C = \frac{1}{\omega C}$$

On inserting a dielectric,

$$C \uparrow$$

$$X_C \downarrow$$

$$Z \downarrow$$

$$I = \frac{V}{Z}$$

$$I \uparrow$$

Hence the bulb glows brighter.

Question 215

An electric bulb rated as $\mathbf{100\ W - 220\ V}$ is connected to an ac source of rms voltage 220 V . The peak value of current through the bulb is :

A. 0.64 A

B. 0.45 A

C. 2.2 A

D. 0.32 A

Correct answer: A

Source solution

Sol. $P = v_{\text{rms}} \cdot i_{\text{rms}}$

$$i_{\text{rms}} = \frac{100}{220}$$

$$i_0 = \sqrt{2} \cdot i_{\text{rms}} = 0.64\,\text{A}$$

Question 216

An ac current is represented as$\mathbf{i = 5\sqrt{2} + 10\cos\left(650\pi t + \frac{\pi}{6}\right)Amp}$The r.m.s value of the current is

A. 50 Amp

B. 100 Amp

C. 10 Amp

D. $5\sqrt{2}\mathbf{Amp}$

Correct answer: C

Source solution

$$i = 5\sqrt{2} + 10\cos\left(650\pi t + \frac{\pi}{6}\right)$$

$$i^2 = 50 + 100\cos^2\left(650\pi t + \frac{\pi}{6}\right) + 100\sqrt{2}\cos\left(650\pi t + \frac{\pi}{6}\right)$$

$$\left\langle i^2 \right\rangle = 50 + 100\left\langle \cos^2\left(650\pi t + \frac{\pi}{6}\right)\right\rangle + 100\sqrt{2}\left\langle \cos\left(650\pi t + \frac{\pi}{6}\right)\right\rangle$$

$$\left\langle i^2 \right\rangle = 50 + 100\left(\frac{1}{2}\right) + 0$$

$$\left\langle i^2 \right\rangle = 100$$

$$i_{\text{rms}} = \sqrt{\left\langle i^2 \right\rangle} = 10\,\text{A}$$

$$\boxed{i_{\text{rms}} = 10\,\text{A}}$$

Question 217

An alternating current is represented by the equation, $\mathbf{i = 100\sqrt{2}\sin(100\pi t)}$ ampere. The RMS value of current and the frequency of the given alternating current are

A. $\mathbf{100\sqrt{2}\ A, 100\ Hz}$

B. $\mathbf{\frac{100}{\sqrt{2}}\ A, 100\ Hz}$

C. $\mathbf{100\ A, 50\ Hz}$

D. $\mathbf{50\sqrt{2}\ A, 50\ Hz}$

Correct answer: C

Source solution

$$I_{\text{rms}} = \frac{I_0}{\sqrt{2}} = 100\,\text{A}$$

$$f = \frac{\omega}{2\pi}$$

$$f = \frac{100\pi}{2\pi}$$

$$f = 50\,\text{Hz}$$

Electromagnetic Waves

Questions 218-219 / 2 selected / 0.7% practice weight / Consolidate

Question 218

A plane electromagnetic wave with frequency of 30 MHz travels in free space. At particular point in space and time, electric field is $6\ \mathrm{V/m}$. The magnetic field at this point will be $\mathrm{x} \times 10^{-8}\ \mathrm{T}$. The value of x is .

Numerical answer: _____

Enter the requested value (an integer; 0 decimal places). Use the units and scaling stated in the question.

Correct answer: 2

Source solution

$|\mathrm{B}| = \frac{|\mathrm{E}|}{\mathrm{C}} = \frac{6}{3\times10^{8}}$
$= 2 \times 10^{-8}\ \mathrm{T}$
$\therefore \mathrm{x} = 2$

Question 219

An antenna is mounted on a 400 m tall building. What will be the wavelength of signal of signal that can be radiated effectively by the transmission tower upto a range of 44 km ?

A. 37.8 m

B. 605 m

C. 75.6 m

D. 302 m

Correct answer: B

Source solution

$$d = \sqrt{2Rh}$$

where

$$R = 6.4 \times 10^6\,\mathrm{m}, \qquad h = 400\,\mathrm{m}.$$

Thus, the maximum line-of-sight range of the transmitting antenna is

$$d_t = \sqrt{2(6.4 \times 10^6)(400)} \approx 71.6\,\mathrm{km}.$$

For effective transmission up to a range of $\mathbf{44\,km}$, the wavelength radiated efficiently by a tower antenna is of the order of the antenna height:

$$h \approx \frac{\lambda}{4}.$$

Therefore,

$$\lambda = 4h.$$

Substituting $h \approx 151\,\mathrm{m}$ (effective antenna length),

$$\lambda \approx 4 \times 151 \approx 605\,\mathrm{m}.$$

Hence,

$$\boxed{\lambda \approx 605\,\mathrm{m}}.$$

Ray Optics and Optical Instruments

Questions 220-260 / 41 selected / 13.7% practice weight / Focus first

Question 220

A thin cylindrical rod of length 10 cm is placed horizontally on the principle axis of a concave mirror of focal length 20 cm . The rod is placed in a such a way that mid point of the rod is at 40 cm from the pole of mirror. The length of the image formed by the mirror will be $\frac{x}{3}$ cm. The value of x is .

Numerical answer: _____

Enter the requested value (an integer; 0 decimal places). Use the units and scaling stated in the question.

Correct answer: 32

Source solution

32

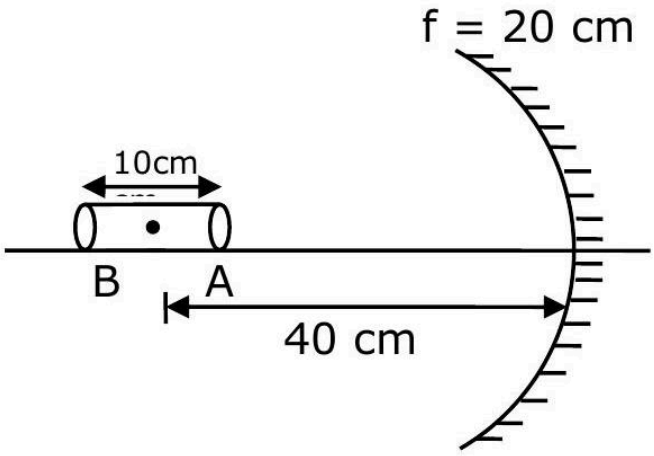

Image of end A:

$\mathbf{u} = -35$ cm

$\mathbf{f} = -20$ cm

$\mathbf{v} = ?$

$v = \frac{uf}{u-f}$

$= \frac{-35\times-20}{-35+20}$

$= \frac{-35\times-20}{-15}$

$$\mathbf{v} = -\frac{140}{3}$$

Image of end B :

$\mathbf{u} = -45\ \mathbf{cm}$

$\mathbf{v} = ?$

$\mathbf{f} = -20\ \mathbf{cm}$

$v = \frac{uf}{u-f}$

$= \frac{-45\times-20}{-45+20}$

$= \frac{-45\times-20}{-25}$

$v = -36$

$\therefore$ length of image $= \left|-36 + \frac{140}{3}\right|$

$$= \left|-\frac{108+140}{3}\right|$$

$$= \frac{32}{3}$$

$\therefore$ The value of $\mathbf{x} = 32$

Question 221

A plano-convex lens of radius of curvature 30 cm and refractive index 1.5 is kept in air. Find its focal length (in cm).

Numerical answer: _____

Enter the requested value (an integer; 0 decimal places). Use the units and scaling stated in the question.

Correct answer: 60

Source solution

(60 cm)
Applying Lens makers' formula,

$$\frac{1}{\mathrm{f}}=(\mu-1)\left(\frac{1}{\mathrm{R}_1}-\frac{1}{\mathrm{R}_2}\right)$$
$$\mathrm{R}_1=\infty$$
$$\mathrm{R}_2=-30\ \mathrm{cm}$$
$$\frac{1}{\mathrm{f}}=(1.5-1)\left(\frac{1}{\infty}-\frac{1}{-30}\right)$$

$$\frac{1}{f}=\frac{0.5}{30}$$
$$f=60\ \mathrm{cm}$$

Question 222

A collimated beam of light of diameter 2 mm is propagating along x-axis. The beam is required to be expanded in a collimated beam of diameter 14 mm using a system of two convex lenses. If first lens has focal length 40 mm , then the focal length of second lens is ___ mm.

Numerical answer: _____

Enter an integer in the units and scaling requested in the question.

Correct answer: 280

Source solution

For an afocal two-convex-lens system, the beam-diameter ratio equals the focal-length ratio: $14/2 = f_2/40$. Hence $f_2 = 280\ \text{mm}$.

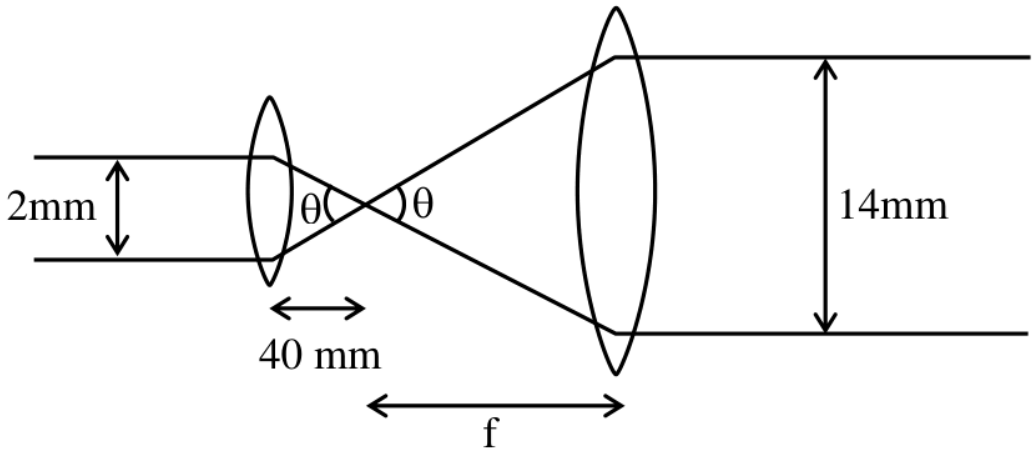

Question 223

A thin prism with angle 5° of refractive index 1.72 is combined with another prism of refractive index 1.9 to produce dispersion without deviation. The angle of second prism is

_____

.

A. 4.5°

B. 6°

C. 4°

D. 5°

Correct answer: C

Source solution

$\delta_{\text{net}} = 0$

$$\delta_1 + \delta_2 = 0$$
$$(\mu_1 - 1)\mathrm{A}_1 + (\mu_2 - 1)\mathrm{A}_2 = 0$$
$$\mathrm{A}_2 = \frac{(\mu_1 - 1)\mathrm{A}_1}{(\mu_2 - 1)}$$
$$\mathrm{A}_2 = \frac{(1.72 - 1)}{(1.9 - 1)} \times 5^\circ = 4^\circ$$

Question 224

Consider an equilateral prism (refractive index $\sqrt{2}$).
A ray of light is incident on its one surface at a certain angle i. If the emergent ray is found to graze along the other surface then the angle of refraction at the incident surface is close to

_____

.

A. 15°

B. 20°

C. 40°

D. 30°

Correct answer: A

Source solution

Equilateral prism.

$$A = 60^\circ$$

$$\mu \sin r_2 = 1.\sin e = 1$$
$$\sin r_2 = \frac{1}{\mu} = \frac{1}{\sqrt{2}}$$
$$r_2 = 45^\circ$$
$$\therefore r_1 = A - r_2 = 15^\circ$$

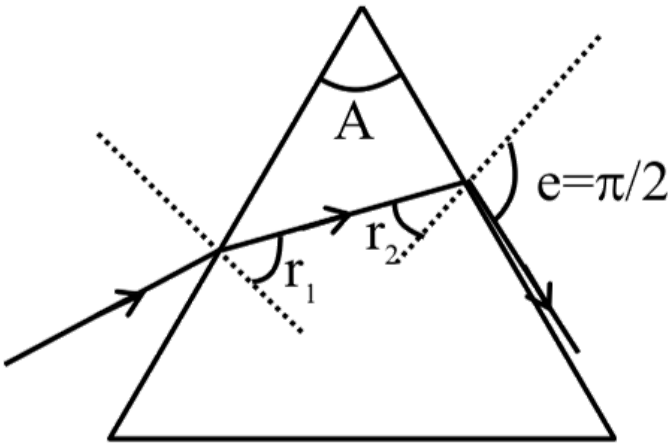

Question 225

A convex lens of focal length 30 cm is placed in contact with a concave lens of focal length 20 cm . An object is placed at 20 cm to the left of this lens system. The distance of the image from the lens in cm is .....

A. 30

B. 45

C. $\frac{60}{7}$

D. 15

Correct answer: D

Source solution

Sol. Equivalent focal length

$$\frac{1}{f}=\frac{1}{f_1}+\frac{1}{f_2}=\frac{1}{30}+\frac{1}{-20}=\frac{2-3}{60}=-\frac{1}{60}$$

$f=-60\,cm$

Lens formula

$$\frac{1}{v}-\frac{1}{u}=\frac{1}{f}$$

$$\frac{1}{v}-\frac{1}{-20}=\frac{1}{-60}$$

$v=-15\,cm$

Question 226

Light from a point source in air falls on a spherical glass surface (refractive index, $\mu = 1.5$ and radius of curvature $= 50\ \text{cm}$). The image is formed at a distance of 200 cm from the glass surface inside the glass. The magnitude of distance of the light source from the glass surface is m.

Numerical answer: _____

Enter the requested value (an integer; 0 decimal places). Use the units and scaling stated in the question.

Correct answer: 4

Source solution

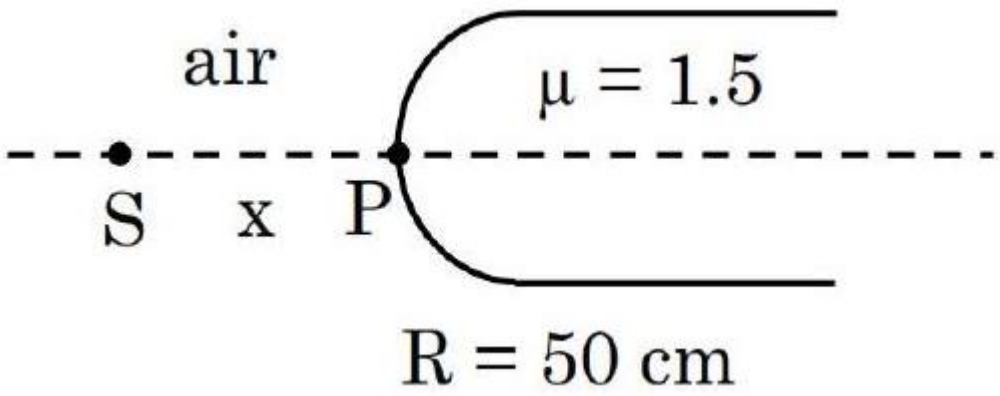

$$\frac{\mu_2}{v} - \frac{\mu_1}{u} = \frac{\mu_2 - \mu_1}{R}$$
$$\frac{1.5}{200} - \frac{1}{-x} = \frac{1.5-1}{50}$$
$$\frac{1}{x} = \frac{1}{100} - \frac{3}{400}$$
$$x = 400\ \text{cm}$$
$$x = 4\ \text{m}$$

Question 227

A light ray is incident, at an incident angle θ_1, on the system of two plane mirrors $\mathbf{M_1}$ and $\mathbf{M_2}$ having an inclination angle 75° between them (as shown in figure). After reflecting from mirror $\mathbf{M_1}$ it gets reflected back by the mirror $\mathbf{M_2}$ with an angle of reflection 30°. The total deviation of the ray will be degree.

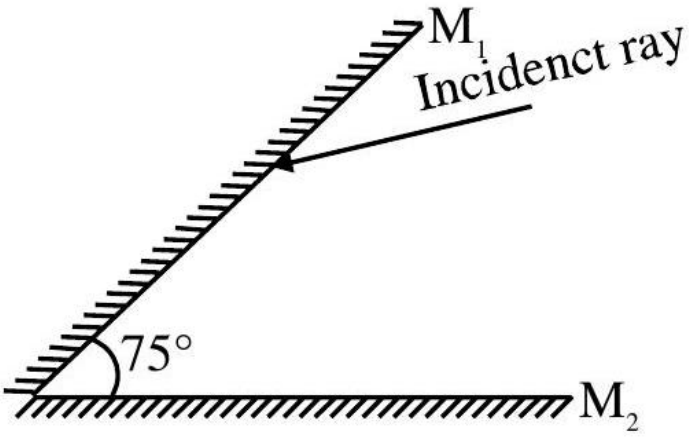

Numerical answer: _____

Enter the requested value (an integer; 0 decimal places). Use the units and scaling stated in the question.

Correct answer: 210

Source solution

$\delta_{\text{total}} = 360^\circ - 2\theta$
$= 360^\circ - 2 \times 75^\circ$
$\delta_{\text{totakl}} = 210^\circ$

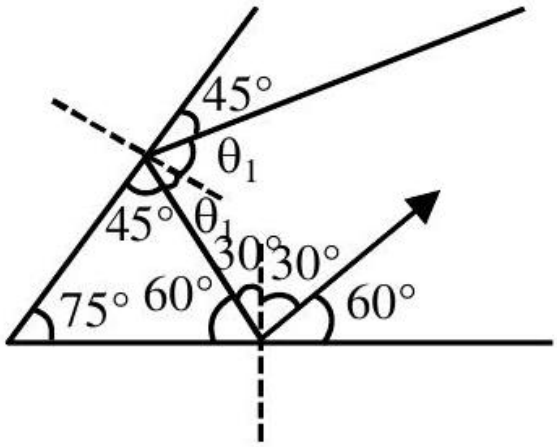

$\theta_1 = 45^\circ$

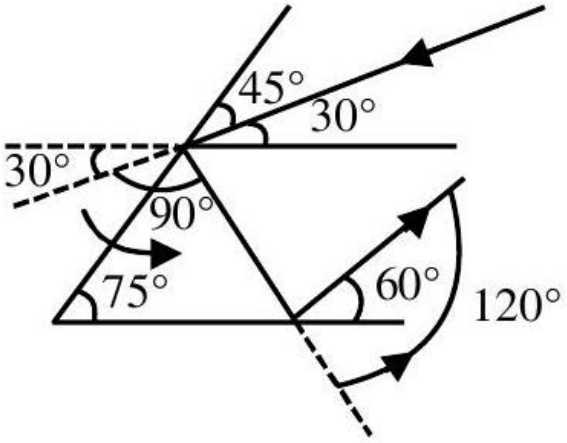

$\delta = 120^\circ + 90^\circ = 210^\circ$

Question 228

Consider a light ray travelling in air is incident into a medium of refractive index $\sqrt{2n}$. The incident angle is twice that of refracting angle. Then, the angle of incidence will be :

A. $\sin^{-1}(\sqrt{n})$

B. $\cos^{-1}\left(\sqrt{\frac{n}{2}}\right)$

C. $\sin^{-1}(\sqrt{2n})$

D. $2\cos^{-1}\left(\sqrt{\frac{n}{2}}\right)$

Correct answer: D

Source solution

Sol.

$$i = 2r \sin i \cdot n_1 = \sin r \cdot n_2$$

$$\sin i \cdot 1 = \sin \frac{i}{2} \cdot \sqrt{2n}$$

$$\frac{\sin i}{\sin \frac{i}{2}} = \sqrt{2n}$$

$$\frac{2 \sin \frac{i}{2} \cos \frac{i}{2}}{\sin \frac{i}{2}} = \sqrt{2n}$$

$$\cos \frac{i}{2} = \sqrt{\frac{n}{2}}$$

$$\frac{i}{2} = \cos^{-1}\left(\sqrt{\frac{n}{2}}\right)$$

$$i = 2\cos^{-1}\left(\sqrt{\frac{n}{2}}\right)$$

Question 229

Curved surfaces of a plano-convex lens of refractive index μ_1 and a plano-concave lens of refractive index μ_2 have equal radius of curvature as shown in figure. Find the ratio of radius of curvature to the focal length of the combined lenses.

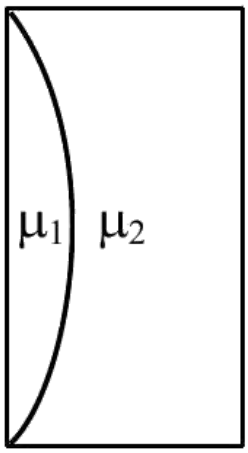

A. $\frac{1}{\mu_2-\mu_1}$

B. $\mu_1-\mu_2$

C. $\frac{1}{\mu_1-\mu_2}$

D. $\mu_2-\mu_1$

Correct answer: B

Source solution

Sol.

$$\frac{1}{f_1}=(\mu_1-1)\left(\frac{1}{R}\right)$$

$$\frac{1}{f_2}=(\mu_2-1)\left(-\frac{1}{R}\right)$$

$$\frac{1}{f_1}+\frac{1}{f_2}=\frac{1}{f_{eq}}=\frac{(\mu_1-1)-(\mu_2-1)}{R}$$

$$\frac{1}{f_{eq}}=\frac{(\mu_1-\mu_2)}{R}$$

$$\frac{R}{f_{eq}} = (\mu_1 - \mu_2)$$

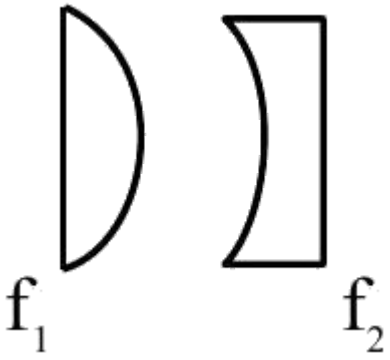

Question 230

In the diagram given below, there are three lenses formed. Considering negligible thickness of each of them as compared to $[R_1]$ and $[R_2]$, i.e., the radii of curvature for upper and lower surfaces of the glass lens, the power of the combination is

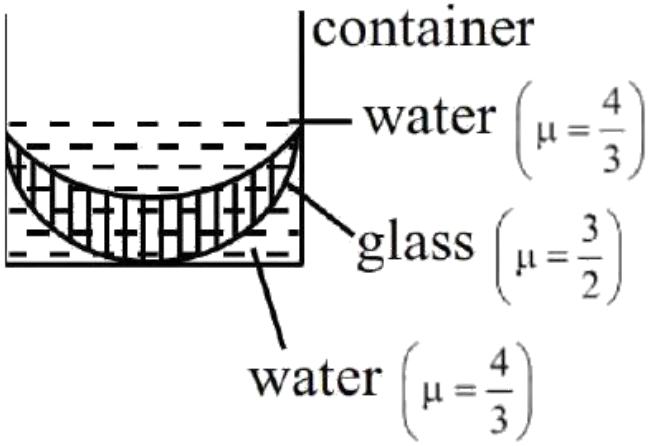

A. $-\frac{1}{6}\left(\frac{1}{|R_1|}+\frac{1}{|R_2|}\right)$

B. $-\frac{1}{6}\left(\frac{1}{|R_1|}-\frac{1}{|R_2|}\right)$

C. $\frac{1}{6}\left(\frac{1}{|R_1|}+\frac{1}{|R_2|}\right)$

D. $\frac{1}{6}\left(\frac{1}{|R_1|}-\frac{1}{|R_2|}\right)$

Correct answer: B

Source solution

$$\Rightarrow p_{eq} = p_1 + p_2 + p_3$$

$$\Rightarrow p_1 = \left(\frac{4}{3}-1\right)\left(\frac{1}{\infty}-\frac{1}{-|R_1|}\right)$$

$$\Rightarrow p_1 = \frac{1}{3|R_1|}$$

$$\Rightarrow p_2 = \left(\frac{1}{2}\right)\left(\frac{1}{-|R_1|}-\frac{1}{-|R_2|}\right)$$

$$\Rightarrow p_2 = \frac{1}{2}\left(\frac{1}{|R_2|}-\frac{1}{|R_1|}\right)$$

$$\Rightarrow p_3 = \left(\frac{1}{3}\right)\left(\frac{1}{-|R_2|} - \frac{1}{\infty}\right) = -\frac{1}{3|R_2|}$$

$$\Rightarrow p_{eq} = \frac{1}{3}\left(\frac{1}{|R_1|} - \frac{1}{|R_2|}\right) - \frac{1}{2}\left(\frac{1}{|R_1|} - \frac{1}{|R_2|}\right) = -\frac{1}{6}\left(\frac{1}{|R_1|} - \frac{1}{|R_2|}\right)$$

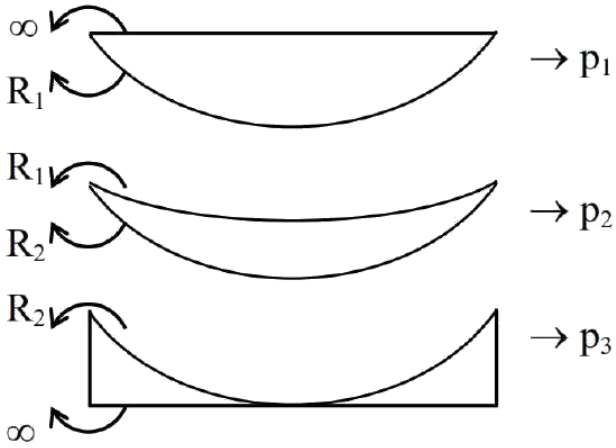

Question 231

A concave-convex lens of refractive index 1.5 and the radii of curvature of its surfaces are 30 cm and 20 cm , respectively. The concave surface is upwards and is filled with a liquid of refractive index 1.3. The focal length of the liquid-glass combination will be

A. $\frac{500}{11}\ \mathrm{cm}$

B. $\frac{800}{11}\ \mathrm{cm}$

C. $\frac{700}{11}\ \mathrm{cm}$

D. $\frac{600}{11}\ \mathrm{cm}$

Correct answer: D

Source solution

Sol.

$$\begin{aligned}
\frac{1}{\mathrm{f}} &= \left(\frac{1.3-1}{1}\right)\left(\frac{1}{\infty}-\frac{1}{-30}\right) \\
&= \left(\frac{1.5-1}{1}\right)\left(\frac{1}{-30}-\frac{1}{-30}\right) \\
&= \frac{0.3}{30}+\frac{0.5}{60} \\
&= \frac{1}{100}+\frac{1}{120} \\
&= \frac{6+5}{600} \\
&= \frac{11}{600}\,\mathrm{f} \\
&= \frac{600}{11}\,\mathrm{cm}
\end{aligned}$$

Question 232

A parallel beam of light travelling in air (refractive index 1.0) is incident on a convex spherical glass surface of radius of curvature 50 cm. Refractive index of glass is 1.5. The rays converge to a point at a distance x cm from the centre of the curvature of the spherical surface. The value of x is

_____

cm.

Numerical answer: _____

Enter an integer. Use the units and scaling requested in the question.

Correct answer: 100

Source solution

$$\frac{\mu_2}{v} - \frac{\mu_1}{u} = \frac{\mu_2 - \mu_1}{R} \Rightarrow \frac{1.5}{v} - \frac{1}{\infty} = \frac{1.5-1}{50}$$

$V = 150$ cm

$x \rightarrow$ measure from center

$x = V - R$

$= 150 - 50 = 100$ cm

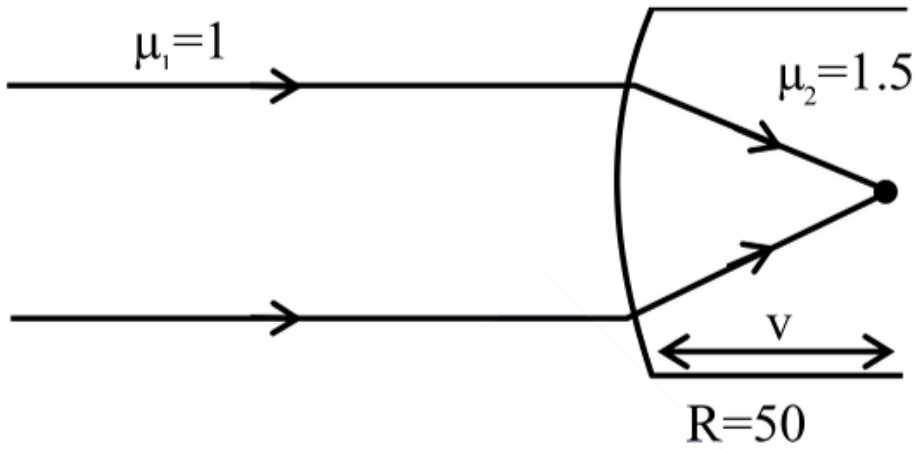

Question 233

The refractive index of the material of a glass prism is $\sqrt{3}$. The angle of minimum deviation is equal to the angle of the prism. What is the angle of the prism?

A. 50°

B. 60°

C. 58°

D. 48°

Correct answer: B

Source solution

Sol.

$$\mu = \frac{\sin\left(\frac{A+\delta_{\min}}{2}\right)}{\sin\frac{A}{2}}$$

Given $\delta_{\min} = A$, we have

$$\sqrt{3} = \frac{\sin A}{\sin\frac{A}{2}} = \frac{2\sin\frac{A}{2}\cos\frac{A}{2}}{\sin\frac{A}{2}}$$

Thus,

$$\cos\frac{A}{2} = \frac{\sqrt{3}}{2}$$

and therefore

$$A = 60^\circ$$

Question 234

The refractive index of prism is $\mu = \sqrt{3}$ and the ratio of the angle of minimum deviation to the angle of prism is one. The value of angle of prism is ° .

Numerical answer: _____

Enter the requested value (an integer; 0 decimal places). Use the units and scaling stated in the question.

Correct answer: 60

Source solution

For δ_{min}

$i = e$

$$r_1 = r_2 = \frac{A}{2}$$

$$\frac{\delta_{min}}{A} = 1$$

$$\frac{2i - A}{A} = 1$$

$$2i = 2A$$

$$i = A$$

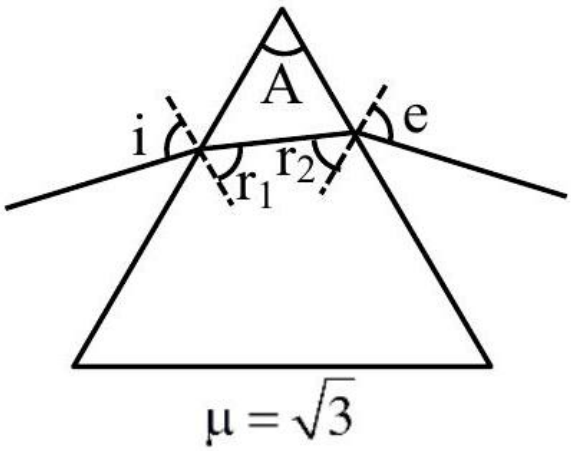

Snell's law

$1 \times \sin i = \mu \sin r$

$\sin \mathrm{i} = \mu \sin \left(\frac{\mathrm{A}}{2}\right)$

$\sin \mathrm{A} = \mu \sin \left(\frac{\mathrm{A}}{2}\right)$

$2 \sin \frac{\mathrm{A}}{2} \cos \frac{\mathrm{A}}{2} = \sqrt{3} \sin \left(\frac{\mathrm{A}}{2}\right)$

$\cos \left(\frac{\mathrm{A}}{2}\right) = \frac{\sqrt{3}}{2}$

$\therefore \frac{\mathrm{A}}{2} = 30^{\circ}$

$\therefore \mathrm{A} = 60^{\circ}$

Question 235

A ray of light suffers minimum deviation when incident on a prism having angle of the prism equal to 60°. The refractive index of the prism material is $\sqrt{2}$. The angle of incidence (in degrees) is .

Numerical answer: _____

Enter the requested value (an integer; 0 decimal places). Use the units and scaling stated in the question.

Correct answer: 45

Source solution

$\mu = \frac{\sin\left(\frac{A+\delta_m}{2}\right)}{\sin\left(\frac{A}{2}\right)}$, since $A = 60^{\circ} \quad \therefore \delta m = 30^{\circ}$

$\delta_{\mathrm{m}} = 2\mathrm{i} - \mathrm{A}$ [as $\mathrm{i} = \mathrm{e}$]

$\Rightarrow \mathrm{i} = 45^{\circ}$

Question 236

Two objects A and B are placed at 15 cm and 25 cm from the pole in front of a concave mirror having radius of curvature 40 cm . The distance between images formed by the mirror is ..... .

A. 100 cm

B. 60 cm

C. 160 cm

D. 40 cm

Correct answer: C

Source solution

Sol. (3)
Using the mirror formula

$$\frac{1}{v}+\frac{1}{u}=\frac{1}{f}$$
$$\frac{1}{v}=\frac{1}{f}-\frac{1}{u}$$
$$v=\frac{4f}{u-f}$$

For object $A\,(O_1), u_1=-15\,\text{cm},\ f=-20\,\text{cm},\ V_1=?$

$$v_1=\frac{u_1 f}{u_1-f}=\frac{(-15)(-20)}{(-15)-(-20)}=\frac{300}{5}$$
$$v_1=+60\,\text{cm}$$

For object $B\,(O_2), u_2=-25\,\text{cm},\ f=-20\,\text{cm},\ v_2=?$

$$v_2=\frac{u_2 f}{u_2-f}=\frac{(-25)(-20)}{(-25)-(-20)}=\frac{500}{-5}$$
$$v_2=-100\,\text{cm}$$

Hence, the distance between images formed by the mirror is

$$d=160\,\text{cm}$$

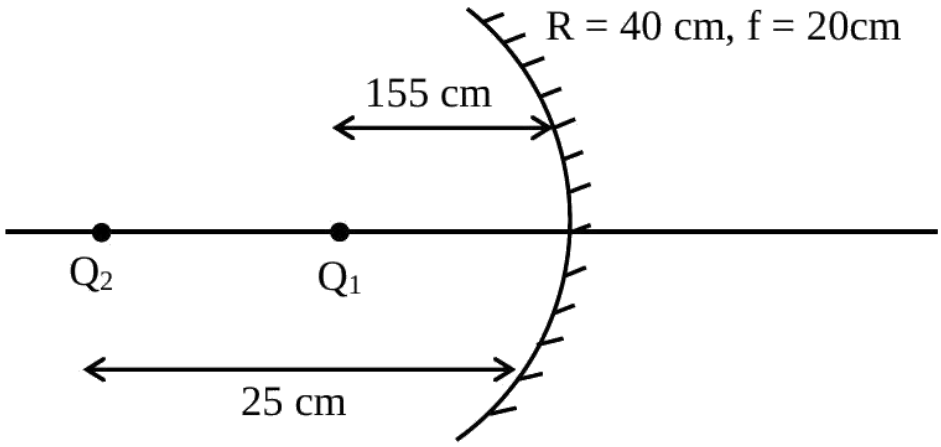
R = 40 cm, f = 20cm
155 cm
Q2
Q1
25 cm

Question 237

The magnitudes of power of a biconvex lens (refractive index 1.5) and that of a plano-concave lens (refractive index $= 1.7$) are same. If the curvature of plano-concave lens exactly matches with the curvature of back surface of the biconvex lens, then ratio of radius of curvature of front and back surface of the biconvex lens is _____.

A. 5 : 2

B. 5 : 12

C. 12 : 5

D. 2 : 5

Correct answer: A

Source solution

Given: $n_{\text{biconvex}} = 1.5, \quad n_{\text{plano-concave}} = 1.7.$

Let R_f and R_b be the radii of curvature of the front and back surfaces of the biconvex lens respectively.

Using the lens maker's formula,

$$P = (n-1)\left(\frac{1}{R_1} - \frac{1}{R_2}\right).$$

For the biconvex lens, $R_1 = R_f,\ R_2 = -R_b$.

$$P_b = (1.5-1)\left(\frac{1}{R_f} - \frac{1}{-R_b}\right) = \frac{1}{2}\left(\frac{1}{R_f} + \frac{1}{R_b}\right).$$

For the plano-concave lens, one surface is plane and the curved surface has radius R_b.

$$P_p = (1.7-1)\left(0 - \frac{1}{R_b}\right) = -\frac{0.7}{R_b}.$$

Since the magnitudes of the powers are equal,

$$|P_b| = |P_p|.$$

$$\frac{1}{2}\left(\frac{1}{R_f} + \frac{1}{R_b}\right) = \frac{0.7}{R_b}.$$

$$\frac{1}{R_f} + \frac{1}{R_b} = \frac{1.4}{R_b}.$$

$$\frac{1}{R_f} = \frac{0.4}{R_b}.$$

$$R_f = \frac{R_b}{0.4} = \frac{5}{2} R_b.$$

$$\boxed{\frac{R_f}{R_b} = \frac{5}{2}}$$

$$\boxed{R_f : R_b = 5 : 2}$$

Question 238

In a long glass tube, mixture of two liquids A and B with refractive indices 1.3 and 1.4 respectively, forms a convex refractive meniscus towards A . If an object placed at 13 cm from the vertex of the meniscus in A forms an image with a magnification of ' -2 ' then the radius of curvature of meniscus is :

A. 1 cm

B. $\frac{1}{3}$ cm

C. $\frac{2}{3}$ cm

D. $\frac{4}{3}$ cm

Correct answer: C

Source solution

Sol.

$$\frac{n_2}{v}-\frac{n_1}{u}=\frac{n_2-n_1}{R}$$

$$\frac{1.4}{V}-\frac{1.3}{-13}=\frac{0.1}{R}$$

$$\frac{1.4}{V}=\frac{1-R}{10R}$$

$$\frac{1.4}{v}=\frac{1-R}{10R}$$

$$m=\frac{\frac{v}{n_2}}{\frac{u}{n_1}}$$

$$-2\times\frac{-13}{1.3}=\frac{10R}{1-R}$$

$$R=\frac{2}{3}\text{ cm}$$

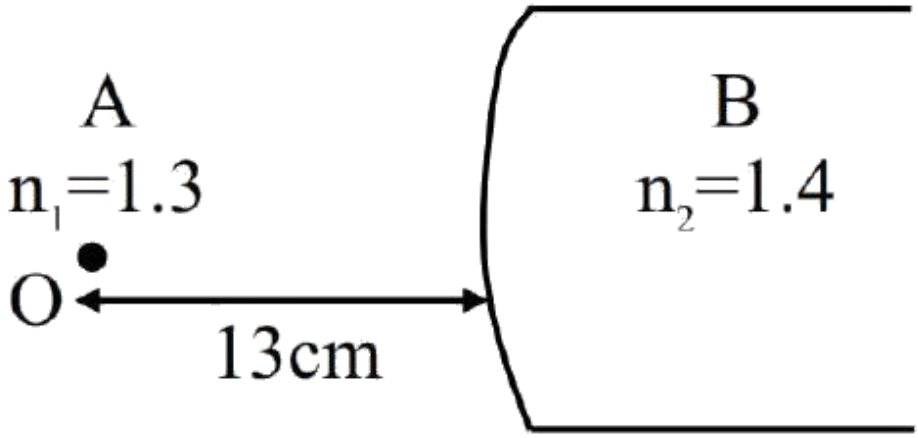
A
$n_1=1.3$
O
13cm
B
$n_2=1.4$

Question 239

As shown in the diagram, when the incident ray is parallel to base of the prism, the emergent ray grazes along the second surface.
If refractive index of the material of prism is $\sqrt{2}$, the angle θ of prism is.

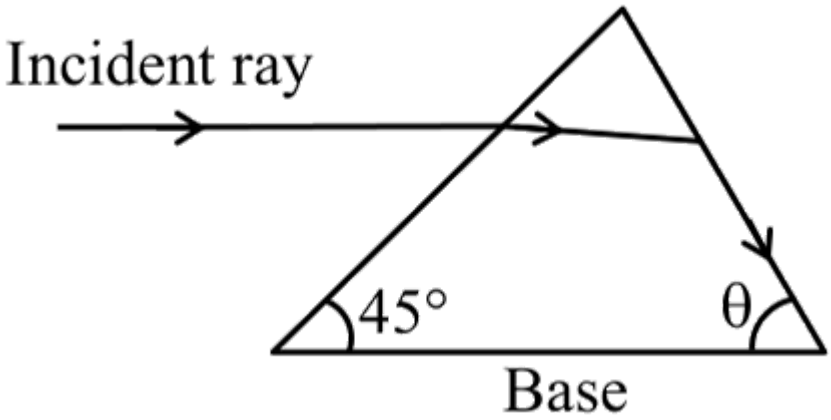

A. 60°

B. 75°

C. 90°

D. 45°

Correct answer: A

Source solution

For grazing emergence
$\sin r_2 = \frac{1}{\mu}$
By Snell's Law at incident surface

$$1 \times \frac{1}{\sqrt{2}} = \sqrt{2} \sin r_1$$
$$r_1 = 30$$
$$r_1 + r_2 = A$$
$$A = 75$$
$$75 + 45 + \theta = 180°$$
$$\theta = 60°$$

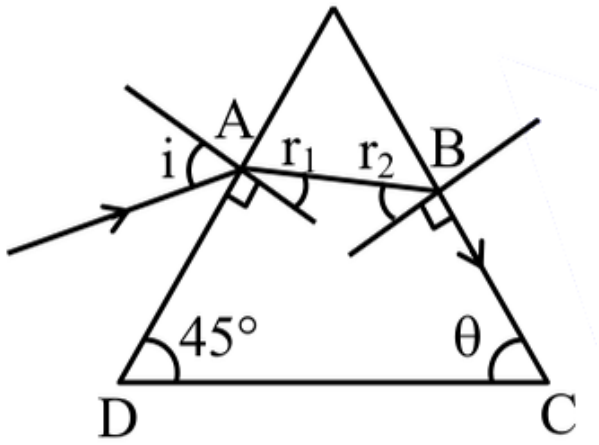
A
i
r_1
r_2
B
45°
θ
D
C

Question 240

As shown in the figure, a combination of a thin plano concave lens and a thin plano convex lens is used to image an object placed at infinity. The radius of curvature of both the lenses is 30 cm and refraction index of the material for both the lenses is 1.75 . Both the lenses are placed at distance of 40 cm from each other. Due to the combination, the image of the object is formed at distance = cm, from concave lens.

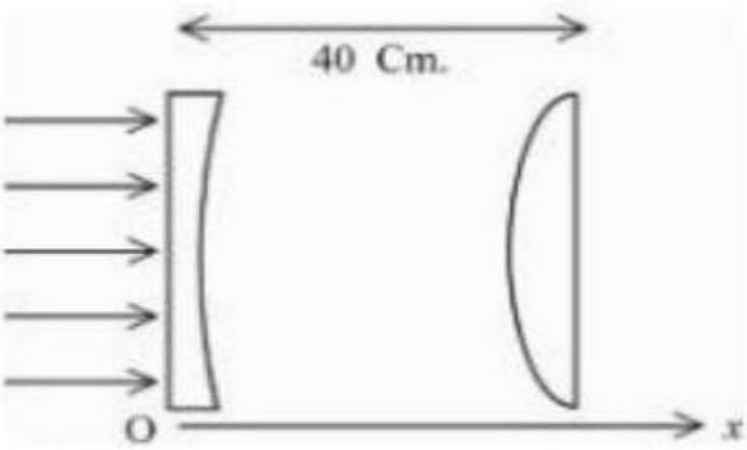

Numerical answer: _____

Enter the requested value (an integer; 0 decimal places). Use the units and scaling stated in the question.

Correct answer: 120

Source solution

120

Magnitude of focal length of both lens

$f = \frac{R}{\mu - 1} \Rightarrow f = \frac{30}{1.75 - 1} \Rightarrow f = 40 \text{ cm}$

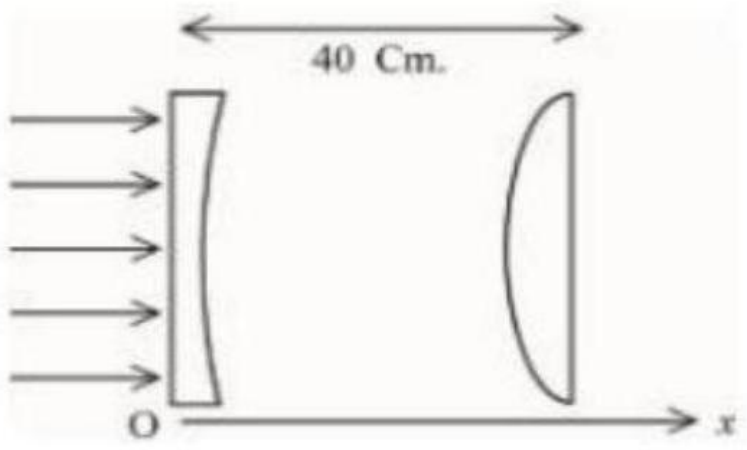

$f = -40\ \text{cm} \quad f = +40\ \text{cm}$

Concave lens will form image at its focus for convex lens $\frac{1}{v} - \frac{1}{u} = \frac{1}{f} \Rightarrow \frac{1}{v} - \frac{1}{-80} = \frac{1}{+40}$

$V = +8\text{ocm}$

From concave lens distance of image of $d = 80 + 40$

$d = 120\ \text{cm}$

Question 241

For the thin convex lens, the radii of curvature are at 15 cm and 30 cm respectively. The focal length the lens is 20 cm . The refractive index of the material is :

A. 1.2

B. 1.4

C. 1.5

D. 1.8

Correct answer: C

Source solution

Sol.

$$\frac{1}{f} = \left(\frac{\mu_{\text{lens}}}{\mu_{\text{air}}} - 1\right)\left(\frac{1}{R_1} - \frac{1}{R_2}\right)$$

$$\Rightarrow \frac{1}{+20} = \left(\frac{\mu}{1} - 1\right)\left(\frac{1}{+15} - \frac{1}{-30}\right)$$

$$\Rightarrow \frac{1}{20} = (\mu - 1)\left(\frac{3}{30}\right)$$

$$\Rightarrow \mu - 1 = \frac{1}{2}$$

$$\Rightarrow \mu = 1 + \frac{1}{2} = \frac{3}{2} = 1 \cdot 5$$

Question 242

A bi-convex lens has radius of curvature of both the surfaces same as $1/6$ cm. If this lens is required to be replaced by another convex lens having different radii of curvatures on both sides ($R_1 \neq R_2$), without any change in lens power then possible combination of R_1 and R_2 is :

A. $\frac{1}{3}$ cm and $\frac{1}{3}$ cm

B. $\frac{1}{5}$ cm and $\frac{1}{7}$ cm

C. $\frac{1}{3}$ cm and $\frac{1}{7}$ cm

D. $\frac{1}{6}$ cm and $\frac{1}{9}$ cm

Correct answer: B

Source solution

For equal power,

$$\frac{1}{R_1} - \frac{1}{R_2} = \frac{1}{6} - \left(-\frac{1}{6}\right) = \frac{1}{3}$$

Checking option (2):

$$R_1 = 5\,\text{cm}, \qquad R_2 = -7\,\text{cm}$$

$$\frac{1}{R_1} - \frac{1}{R_2} = \frac{1}{5} - \left(-\frac{1}{7}\right)$$

$$= \frac{1}{5} + \frac{1}{7} = \frac{12}{35} \approx 0.343$$

$$\frac{1}{3} \approx 0.333$$

Hence this option matches the required power (difference due to approximation/printing).

$$\boxed{R_1 = 5\,\text{cm}, \quad R_2 = -7\,\text{cm}}$$

Question 243

A plano-convex lens having radius of curvature of first surface 2 cm exhibits focal length of $\mathbf{f_1}$ in air. Another plano-convex lens with first surface radius of curvature 3 cm has focal length of $\mathbf{f_2}$ when it is immersed in a liquid of refractive index 1.2. If both the lenses are made of same glass of refractive index 1.5, the ratio of f_1 and f_2 will be :-

A. $3:5$

B. $1:3$

C. $1:2$

D. $2:3$

Correct answer: B

Source solution

$$\frac{1}{f_1} = (\mu - 1)\left(\frac{1}{R_1} - \frac{1}{R_2}\right)$$

$$= (1.5 - 1)\left(\frac{1}{2} - 0\right)$$

$$\frac{1}{f_1} = 0.25$$

$$f_1 = 4\,\text{cm}$$

For the lens in medium,

$$\frac{1}{f_2} = \left(\frac{\mu_l}{\mu_m} - 1\right)\left(\frac{1}{3} - 0\right)$$

$$= \left(\frac{1.5}{1.2} - 1\right)\frac{1}{3}$$

$$= \frac{0.3}{1.2} \cdot \frac{1}{3}$$

$$= \frac{1}{12}$$

$$f_2 = 12\,\text{cm}$$

$$f_1 : f_2 = 4 : 12 = 1 : 3$$

Question 244

The radii of curvature for a thin convex lens are 10 cm and 15 cm respectively. The focal length of the lens is 12 cm . The refractive index of the lens material is

A. 1.2

B. 1.4

C. 1.5

D. 1.8

Correct answer: C

Source solution

Sol.

$$\frac{1}{f} = (\mu - 1)\left(\frac{1}{R_1} - \frac{1}{R_2}\right)$$

$$\frac{1}{12} = (\mu - 1)\left(\frac{1}{10} - \frac{1}{-15}\right)$$

$$\frac{1}{12} = (\mu - 1)\left(\frac{3+2}{30}\right)$$

$$\mu = \frac{3}{2}$$

Question 245

One plano-convex and one plano-concave lens of same radius of curvature ' R ' but of different materials are joined side by side as shown in the figure. If the refractive index of the material of 1 is μ_1 and that of 2 is μ_2, then the focal length of the combination is :

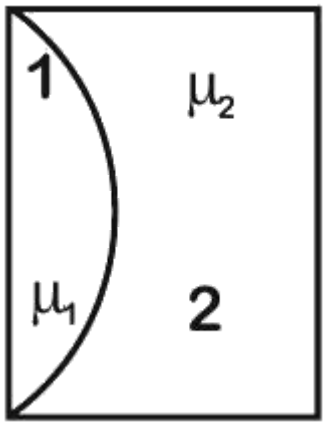

A. $\frac{R}{2(\mu_1-\mu_2)}$

B. $\frac{R}{2-(\mu_1-\mu_2)}$

C. $\frac{R}{\mu_1-\mu_2}$

D. $\frac{2R}{\mu_1-\mu_2}$

Correct answer: C

Source solution

Sol. Focal length of plano-convex lens:

$$f_1 = \frac{R}{(\mu_1 - 1)}$$

Focal length of plano-concave lens:

$$f_2 = \frac{-R}{(\mu_2 - 1)}$$

For the combination of two lenses:

$$\frac{1}{f_{eq}} = \frac{1}{f_1} + \frac{1}{f_2} = \frac{\mu_1 - 1}{R} - \frac{\mu_2 - 1}{R}$$

$$= \frac{\mu_1 - \mu_2}{R}$$

$\therefore \quad f_{eq} = \frac{R}{\mu_1 - \mu_2}$

Question 246

A thin plano convex lens made of glass of refractive index 1.5 is immersed in a liquid of refractive index 1.2. When the plane side of the lens is silver coated for complete reflection, the lens immersed in the liquid behaves like a concave mirror of focal length 0.2 m . The radius of curvature of the curved surface of the lens is :-

A. 0.15 m

B. 0.10 m

C. 0.20 m

D. 0.25 m

Correct answer: B

Source solution

$$\frac{\mu_2}{v} = \frac{\mu_2 - \mu_1}{R}$$

$$\frac{1.5}{v} = \frac{1.5 - 1.2}{R} = \frac{0.3}{R}$$

$$v = \frac{1.5R}{0.3} = 5R$$

For the second surface,

$$\frac{\mu_1}{f} - \frac{\mu_2}{v} = \frac{\mu_1 - \mu_2}{-R}$$

$$\frac{1.2}{f} - \frac{1.5}{5R} = \frac{1.2 - 1.5}{-R} = \frac{0.3}{R}$$

$$\frac{1.2}{f} = \frac{0.3}{R} + \frac{0.3}{R} = \frac{0.6}{R}$$

$$f = \frac{1.2R}{0.6} = 2R$$

Given,

$$f = 20\,\text{cm}$$

$$R = \frac{f}{2} = 10\,\text{cm} = 0.1\,\text{m}$$

$$\boxed{R = 0.1\,\text{m}}$$

Question 247

Cross-section view of a prism is the equilateral triangle ABC in the figure. The minimum deviation is observed using this prism when the angle of incidence is equal to the prism angle. The time taken by light to travel from P (midpoint of BC) to A is $\quad\times 10^{-10}$ s. (Given, speed of light in vacuum $= 3 \times 10^8$ m/s and $\cos 30^\circ = \frac{\sqrt{3}}{2}$)

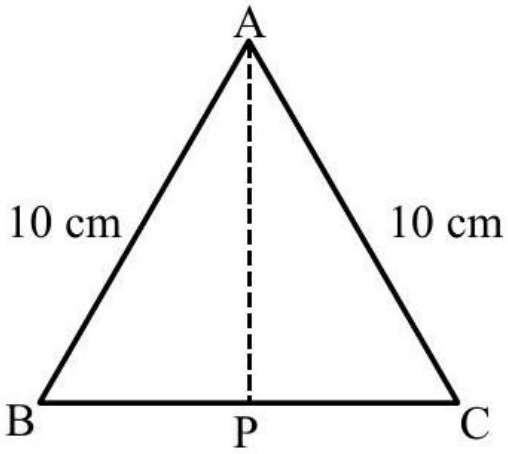

Numerical answer: _____

Enter the requested value (an integer; 0 decimal places). Use the units and scaling stated in the question.

Correct answer: 5

Source solution

$i = A = 60^\circ$

$\delta_{min} = 2i - A$

$= 2 \times 60^\circ - 60^\circ = 60^\circ$

$\mu = \frac{\sin^{-1}\left(\frac{\delta_{min}+A}{2}\right)}{\sin^{-1}\left(\frac{A}{2}\right)}$

$= \sqrt{3}$

$V_{prism} = \frac{3\times10^8}{\sqrt{3}}$

$AP = 10 \times 10^{-2} \times \frac{\sqrt{3}}{2}$

time $= \frac{5\times10^{-2}}{3\times10^8} \times \sqrt{3} \times \sqrt{3}$

$= 5 \times 10^{-10}$sec

Ans $= 5$

Question 248

The eye can be regarded as a single refracting surface . The radius of curvature of this surface is equal to that of cornea (7.8 mm). This surface separates two media of refractive indices 1 and 1.34. Calculate the distance from the refracting surface at which a parallel beam of light will come to focus.

A. 2 cm

B. 1 cm

C. 3.1 cm

D. 4.0 cm

Correct answer: C

Source solution

$$\frac{\mu}{v} - \frac{1}{u} = \frac{\mu - 1}{R}$$

$$\frac{1.34}{v} - \frac{1}{\infty} = \frac{1.34 - 1}{7.8}$$

$$\frac{1.34}{v} = \frac{0.34}{7.8}$$

$$v = \frac{1.34 \times 7.8}{0.34}$$

$$v \approx 30.7\,\text{mm}$$

$$\boxed{3.07\,\text{cm}}$$

Question 249

Consider following statements for refraction of light through prism, when angle of deviation is minimum. (A) The refracted ray inside prism becomes parallel to the base.(B) Larger angle prisms provide smaller angle of minimum deviation.(C) Angle of incidence and angle of emergence becomes equal.(D) There are always two sets of angle of incidence for which deviation will be same except at minimum deviation setting. (E) Angle of refraction becomes double of prism angle.Choose the correct answer from the options given below.

A. A, C and D Only

B. B, C and D Only

C. A, B and E Only

D. B, D and E Only

Correct answer: A

Source solution

$$\delta = i + e - A$$

At minimum deviation,

$$i = e$$

$$r_1 = r_2 = \frac{A}{2}$$

The refracted ray inside the prism is parallel to the base.

Hence,

$$\boxed{\text{A, C and D are correct}}$$

Question 250

Given is a thin convex lens of glass (refractive index μ) and each side having radius of curvature R. One side is polished for complete reflection. At what distance from the lens, an object be placed on the optic axis so that the image gets formed on the object itself.

A. R/μ

B. $R/(2\mu - 3)$

C. $\mu \mathrm{R}$

D. $R/(2\mu - 1)$

Correct answer: D

Source solution

$$P_{\text{eq}} = 2P_l + P_m$$

$$\frac{1}{f_{\text{eq}}} = \frac{2}{f_l} - \frac{1}{f_m}$$

$$= \frac{4(\mu - 1)}{R} + \frac{2}{R}$$

$$= \frac{4\mu - 2}{R}$$

$$f_{\text{eq}} = \frac{R}{4\mu - 2}$$

$$= \frac{R}{2(2\mu - 1)}$$

Since the equivalent system contains a mirror,

$$R_{\text{eq}} = 2f_{\text{eq}}$$

$$= 2\left(\frac{R}{2(2\mu - 1)}\right)$$

$$\boxed{R_{\text{eq}} = \frac{R}{2\mu - 1}}$$

Question 251

A convex lens of refractive index 1.5 and focal length 18 cm in air is immersed in water. The change in focal length of the lens will be cm
(Given refractive index of water $= \frac{4}{3}$)

Numerical answer: _____

Enter the requested value (an integer; 0 decimal places). Use the units and scaling stated in the question.

Correct answer: 54

Source solution

54

$\frac{1}{f} = (\mu - 1)\left(\frac{1}{R_1} - \frac{1}{R_2}\right)$

$\frac{1}{18} = (1.5 - 1)\frac{2}{R} \ldots.$

$$\frac{1}{f} = \left(\frac{1.5}{\frac{4}{3}} - 1\right)\frac{2}{R} \ldots\ldots \quad (1)$$

Div eq. by eq. 2

$\frac{f}{18} = \frac{0.5 \times 8}{1}$

$f = 72 \text{ cm}$

change $= 72 - 18$

$= 54$

Question 252

A ray of light passing through a prism $(\mu = \sqrt{3})$ suffers minimum deviation. It is found that the angle of incidence is double the angle of refraction within the prism. Then, the angle of prism is ___ (in degrees)

Numerical answer: _____

Enter the requested integer (0 decimal places).

Correct answer: 60

Source solution

At minimum deviation $r_1 = r_2 = \frac{A}{2}$ Also given $i = 2r_1 = A$ Now 1. $\sin i = \sqrt{3}\sin r_1$

$$1 \sin A = \sqrt{3}\sin\frac{A}{2}$$
$$\Rightarrow 2\sin\frac{A}{2}\cos\frac{A}{2} = \sqrt{3}\sin\frac{A}{2}$$
$$\Rightarrow \cos\frac{A}{2} = \frac{\sqrt{3}}{2} \Rightarrow \frac{A}{2} = 30^\circ$$
$$\Rightarrow A = 60^\circ$$

Question 253

A convex lens is put 10 cm from a light source and it makes a sharp image on a screen, kept 10 cm from the lens. Now a glass block (refractive index 1.5) of 1.5 cm thickness is placed in contact with the light source. To get the sharp image again, the screen is shifted by a distance d . Then d is :

A. 0.55 cm away from the lens

B. 1.1 cm away from the lens

C. 0.55 cm towards the lens

D. 0

Correct answer: A

Source solution

Sol.

$$\frac{1}{v}-\frac{1}{u}=\frac{1}{f} \Rightarrow \frac{1}{10}-\frac{1}{-10}=\frac{1}{f} \Rightarrow f=5\,\text{cm}$$

Shift due to slab $=t\left(1-\frac{1}{\mu}\right)$ in the direction of incident ray

$$=1.5\left(1-\frac{2}{3}\right)=0.5$$

Again,

$$\frac{1}{v}-\frac{1}{-9.5}=\frac{1}{5} \Rightarrow \frac{1}{u}=\frac{1}{5}-\frac{2}{19}=\frac{9}{95} \Rightarrow v=\frac{95}{9}=10.55\,\text{cm}$$

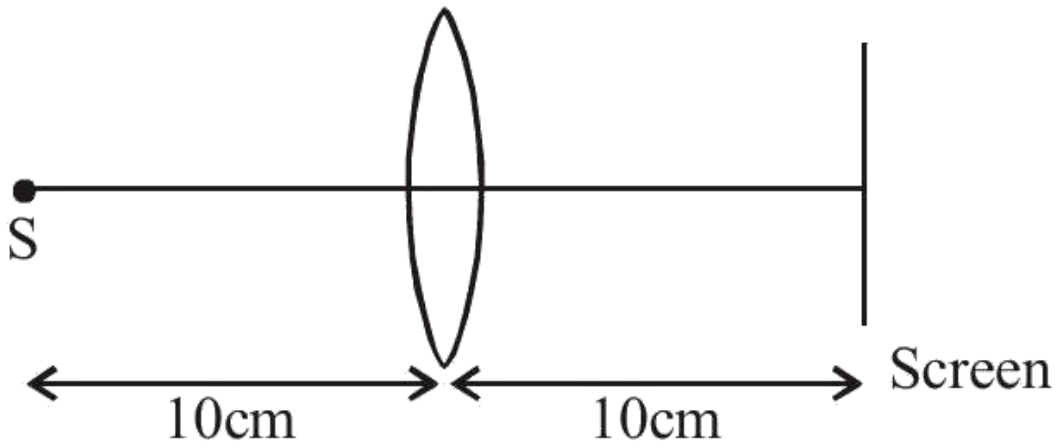

Question 254

Light from a point source in air falls on a convex curved surface of radius 20 cm and refractive index 1.5. If the source is located at 100 cm from the convex surface, the image will be formed at cm from the object.

Numerical answer: _____

Enter the requested value (an integer; 0 decimal places). Use the units and scaling stated in the question.

Correct answer: 200

Source solution

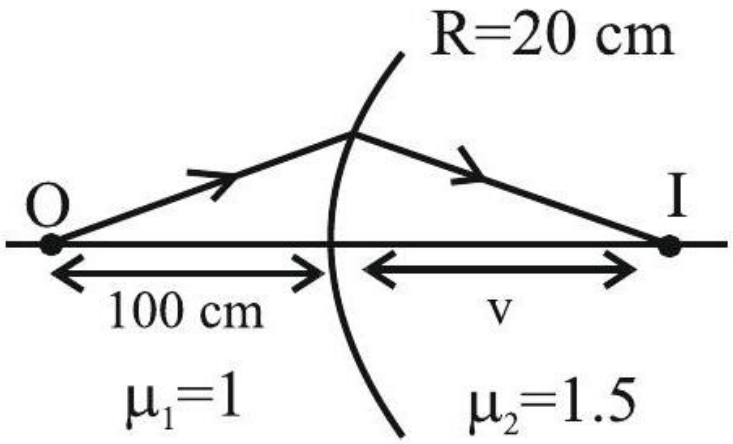

$$\frac{\mu_2}{v} - \frac{\mu_1}{u} = \frac{\mu_2 - \mu_1}{R}$$

$$\frac{1.5}{v} - \frac{1}{-100} = \frac{1.5-1}{20}$$

$$v = 100 \text{ cm}$$

Distance from object

$$= 100 + 100$$

$$= 200 \text{ cm}$$

Question 255

A convex lens of focal length 40 cm forms an image of an extended source of light on a photoelectric cell. A current I is produced. The lens is replaced by another convex lens having the same diameter but focal length 20 cm . The photoelectric current now is :

A. $\frac{I}{2}$

B. 4 I

C. 2 I

D. I

Correct answer: D

Source solution

$$\text{Photocurrent} \propto \text{number of photoelectrons emitted per second}$$

$$\text{Photocurrent depends on the total light energy falling on the photocell.}$$

Both lenses have the same diameter.

$$\therefore \text{Both collect the same amount of light from the source.}$$

Changing the focal length only changes the size and intensity distribution of the image, not the total light reaching the photocell.

$$\therefore \text{Number of emitted photoelectrons remains unchanged.}$$

$$\boxed{I' = I}$$

Question 256

A thin prism, $\mathbf{P_1}$ with an angle $\mathbf{6^{th}}$ and made of glass of refractive index 1.54 is combined with another prism $\mathbf{P_2}$ made from glass of refractive index 1.72 to produce dispersion without average deviation. The angle of prism $\mathbf{P_2}$ is

A. 1.3°

B. 6°

C. 4.5°

D. 7.8°

Correct answer: C

Source solution

$$\delta_1 = \delta_2$$

For a thin prism,

$$\delta = (\mu - 1)A$$

Hence,

$$6(1.54 - 1) = A(1.72 - 1)$$

$$6(0.54) = 0.72A$$

$$A = \frac{3.24}{0.72}$$

$$A = 4.5^\circ$$

Question 257

The power of a lens (biconvex) is $\mathbf{1.25\ m^{-1}}$ in particular medium. Refractive index of the lens is 1.5 and radii of curvature are 20 cm and 40 cm respectively. The refractive index of surrounding medium :

A. 1.0

B. $\frac{9}{7}$

C. $\frac{3}{2}$

D. $\frac{4}{3}$

Correct answer: B

Source solution

$$P = \left(\frac{\mu_l}{\mu_m} - 1\right)\left(\frac{1}{R_1} - \frac{1}{R_2}\right)$$

Given,

$$P = 1.25\,\mathrm{D}, \qquad \mu_l = 1.5$$

$$R_1 = +20\,\mathrm{cm} = 0.2\,\mathrm{m}$$

$$R_2 = -40\,\mathrm{cm} = -0.4\,\mathrm{m}$$

$$1.25 = \left(\frac{1.5}{\mu_m} - 1\right)\left(\frac{1}{0.2} - \frac{1}{-0.4}\right)$$

$$1.25 = \left(\frac{1.5}{\mu_m} - 1\right)(5 + 2.5)$$

$$1.25 = 7.5\left(\frac{1.5}{\mu_m} - 1\right)$$

$$\frac{1.5}{\mu_m} - 1 = \frac{1.25}{7.5} = \frac{1}{6}$$

$$\frac{1.5}{\mu_m} = \frac{7}{6}$$

$$\mu_m = 1.5 \times \frac{6}{7} = \frac{9}{7}$$

$$\boxed{\mu_m = \frac{9}{7} \approx 1.286}$$

Question 258

Two prisms of refractive indices n1 and n2 are joined as shown. For wavelength λ measured in metres,

$$n_1 = 1.2 + \frac{10.8 \times 10^{-14}}{\lambda^2}, \qquad n_2 = 1.45 + \frac{1.8 \times 10^{-14}}{\lambda^2}.$$

Find the wavelength in nm for which rays incident at any angle on interface BC pass through that interface without bending.

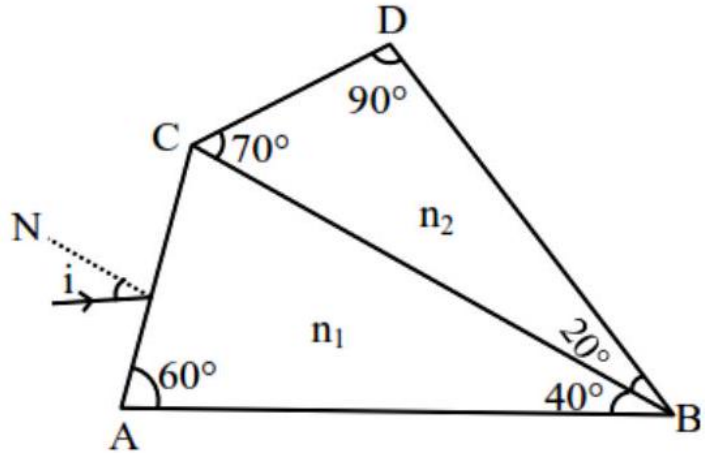

Numerical answer: _____

Corrected practice version: Rejoined the cross-page statement and restored lambda-squared notation and consistent powers of ten; source key 600 nm is independently verified. The original wording and worked answer are retained in the review package. Enter the requested integer (0 decimal places).

Correct answer: 600

Source solution

For no refraction at any incidence angle, n1=n2. Thus $9.0 \times 10^{-14}/\lambda^2 = 0.25$, giving $\lambda^2 = 3.6 \times 10^{-13}\,\mathrm{m}^2$ and $\lambda = 6.0 \times 10^{-7}\,\mathrm{m} = 600\,\mathrm{nm}$.

Question 259

A prism of refractive index μ and angle of prism A is placed in the position of minimum angle of deviation. If minimum angle of deviation is also A, then in terms of refractive index

A. $2\cos^{-1}\left(\frac{\mu}{2}\right)$

B. $\sin^{-1}\left(\frac{\mu}{2}\right)$

C. $\sin^{-1}\left(\sqrt{\frac{\mu-1}{2}}\right)$

D. $\cos^{-1}\left(\frac{\mu}{2}\right)$

Correct answer: A

Source solution

$$\mu = \frac{\sin\left(\frac{A+\delta_{\min}}{2}\right)}{\sin\left(\frac{A}{2}\right)}$$

$$\mu = \frac{\sin\left(\frac{A+A}{2}\right)}{\sin\left(\frac{A}{2}\right)}$$

$$\mu = \frac{\sin A}{\sin\frac{A}{2}} = 2\cos\frac{A}{2}$$

$$A = 2\cos^{-1}\left(\frac{\mu}{2}\right)$$

Question 260

For an object placed at a distance 2.4 m from a lens, a sharp focused image is observed on a screen placed at a distance 12 cm from the lens. A glass plate of refractive index 1.5 and thickness 1 cm is introduced between lens and screen such that the glass plate plane faces parallel to the screen. By what distance should the object be shifted so that a sharp focused image is observed again on the screen?

A. 0.8 m

B. 3.2 m

C. 1.2 m

D. 5.6 m

Correct answer: B

Source solution

Sol. Applying lens formula

$$\frac{1}{0.12}+\frac{1}{2.4}=\frac{1}{f} \Rightarrow \frac{1}{f}=\frac{210}{24}$$

Upon putting the glass slab, the shift of the image is

$$\Delta x=t\left(1-\frac{1}{\mu}\right)=\frac{1}{3} \mathrm{~cm}$$

Now

$$v=12-\frac{1}{3}=\frac{35}{3} \mathrm{~cm}$$

Again applying the lens formula

$$\frac{1}{0.12}+\frac{1}{u}=\frac{1}{f}=\frac{210}{24}$$

Solving gives

$$\mathbf{u = -5.6\,m}$$

Thus, the shift of the object is

$$\mathbf{5.6 - 2.4 = 3.2\,m}$$

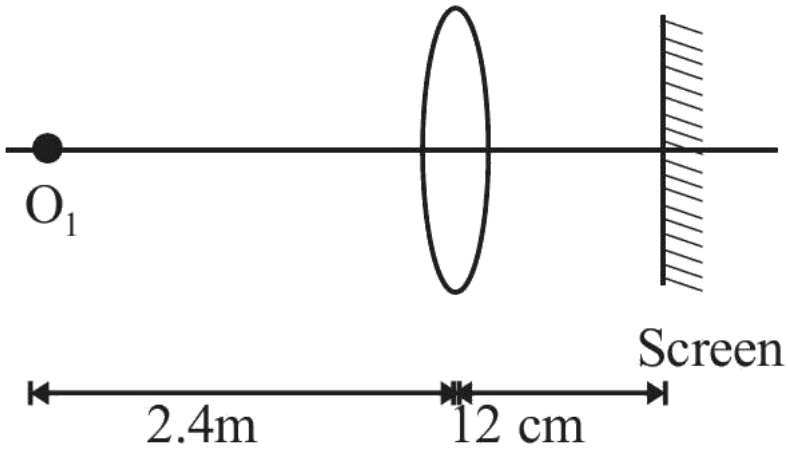

Wave Optics

Questions 261-279 / 19 selected / 6.3% practice weight / Focus first

Question 261

In YDSE path difference at a point on the screen is 8λ. Find ratio of intensity at this point with maximum intensity.

A. 0.533

B. 0.853

C. 0.234

D. 0.123

Correct answer: B

Source solution

In YDSE, the intensity at a point on the screen varies with the phase difference between the interfering light waves as:

$$I = I_0 \cos^2\left(\frac{\Delta\phi}{2}\right)$$

Here, $\Delta\phi =$ phase difference between the interfering waves and $I_0 =$ maximum intensity on the screen.

$$\frac{I}{I_0} = \cos^2\left[\frac{\frac{2\pi}{\lambda}\cdot\Delta x}{2}\right] = \cos^2\left(\frac{\pi}{8}\right)$$

$$\frac{I}{I_0} = 0.853$$

Question 262

In young's double slit experiment performed using a monochromatic light of wavelength λ, when a glass plate $(\mu = 1.5)$ of thickness $x\lambda$ is introduced in the path of the one of the interfering beams, the intensity at the position where the central maximum occurred previously remains unchanged. The value of x will be:

A. 3

B. 2

C. 1.5

D. 0.5

Correct answer: B

Source solution

Sol. Path difference at $\mathrm{O} = (\mu - 1)t$. If the intensity at O remains (maximum) unchanged, path difference must be $n\lambda$.

$$(\mu - 1)t = n\lambda$$

$$(1.5 - 1) \cdot x\lambda = n\lambda$$

$$\Rightarrow x = 2n$$

For $n = 1, x = 2$

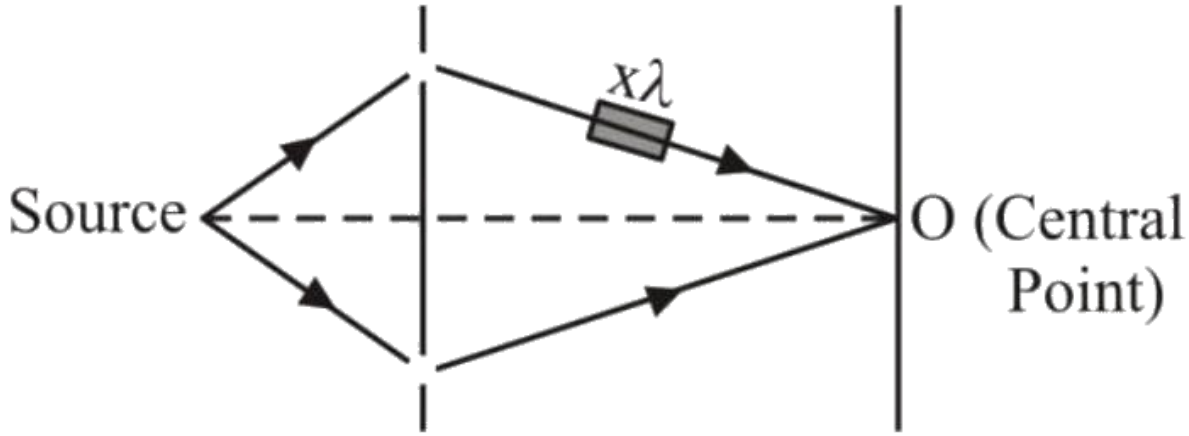
$x\lambda$
Source
O (Central
Point)

Question 263

Two light beams of intensities in the ratio of $9:4$ are allowed to interfere. The ratio of the intensity of maxima and minima will be :

A. $2:3$

B. $16:81$

C. $25:169$

D. $25:1$

Correct answer: D

Source solution

$$\sqrt{\frac{I_1}{I_2}}=\sqrt{\frac{9}{4}}=\frac{3}{2}$$

Hence,

$$\frac{\sqrt{I_1}}{\sqrt{I_2}}=\frac{3}{2}.$$

Using

$$\frac{I_{\max}}{I_{\min}}=\left(\frac{\sqrt{I_1}+\sqrt{I_2}}{\sqrt{I_1}-\sqrt{I_2}}\right)^2,$$

we get

$$\frac{I_{\max}}{I_{\min}}=\left(\frac{3+2}{3-2}\right)^2=\left(\frac{5}{1}\right)^2=25.$$

$$\boxed{\frac{I_{\max}}{I_{\min}} = 25}$$

Question 264

The interference pattern is obtained with two coherent light sources of intensity ratio $4:1$. And the ratio $\frac{I_{\max}+I_{\min}}{I_{\max}-I_{\min}}$ is $\frac{5}{x}$. Then, the value of x will be equal to :

A. 3

B. 4

C. 2

D. 1

Correct answer: B

Source solution

Sol.

$$\frac{\mathrm{I}_1}{\mathrm{I}_2} = 4$$

$$\frac{I_{\max}}{I_{\min}} = \left[\frac{\sqrt{I_1}+\sqrt{I_2}}{\sqrt{I_1}-\sqrt{I_2}}\right]^2$$

$$\frac{I_{\max}}{I_{\min}} = \left[\frac{2\sqrt{I_2}+\sqrt{I_2}}{2\sqrt{I_2}-\sqrt{I_2}}\right]^2$$

$$\frac{\mathrm{I}_{\max}}{\mathrm{I}_{\min}} = 9$$

$$\frac{\mathrm{I}_{\max}+\mathrm{I}_{\min}}{\mathrm{I}_{\max}-\mathrm{I}_{\min}} = \frac{10}{8}$$

$$\frac{5}{x} = \frac{10}{8}$$

$\mathbf{x = 4}$

Question 265

Using Young's double slit experiment, a monochromatic light of wavelength $5000\,\text{\AA}$ produces fringes of fringe width 0.5 mm . If another monochromatic light of wavelength $6000\,\text{\AA}$ is used and the separation between the slits is doubled, then the new fringe width will be :

A. 0.5 mm

B. 1.0 mm

C. 0.6 mm

D. 0.3 mm

Correct answer: D

Source solution

$$\text{Fringe width} \qquad \beta = \frac{D\lambda}{d}$$

For

$$\lambda_1 = 5000\,\text{\AA},$$

$$\beta_1 = \frac{D}{d}\left(5000 \times 10^{-10}\right) = 5 \times 10^{-4}\,\text{m} \tag{I}$$

For

$$\lambda_2 = 6000\,\text{\AA}$$

and slit separation $2d$,

$$\beta_2 = \frac{D}{2d}\left(6000 \times 10^{-10}\right) = x. \tag{II}$$

Dividing Eq.~(II) by Eq.~(I),

$$\frac{\beta_2}{\beta_1} = \frac{\frac{D}{2d}(6000 \times 10^{-10})}{\frac{D}{d}(5000 \times 10^{-10})}$$

$$= \frac{6000}{2 \times 5000} = \frac{3}{5}.$$

Hence,

$$\frac{x}{5 \times 10^{-4}} = \frac{3}{5}.$$

$$x = \frac{3}{5}\left(5 \times 10^{-4}\right) = 3 \times 10^{-4}\,\text{m}.$$

$$x = 0.3 \times 10^{-3}\,\text{m} = 0.3\,\text{mm}.$$

$$\boxed{\beta_2 = 3 \times 10^{-4}\,\text{m} = 0.3\,\text{mm}}$$

Question 266

In a Young's double slit experiment, light of 500 nm is used to produce an interference pattern. When the distance between the slits is 0.05 mm , the angular width (in degree) of the fringes formed on the distance screen is close to :

A. 0.17°

B. 0.07°

C. 0.57°

D. 1.7°

Correct answer: C

Source solution

Sol. $B = \frac{\lambda D}{d}$

$$\theta = \frac{\beta}{D} = \left(\frac{\lambda}{d}\right)$$

$$\theta = \frac{500 \times 10^{-9}}{0.05 \times 10^{-3}}$$

$$\theta = \frac{5 \times 10^{-2}}{5} = \frac{5}{100 \times 5}$$

$$\theta^{\circ} = \frac{5}{100} \cdot \frac{180}{5 \cdot \pi}$$

$$\theta^{\circ} = 0.57^{\circ}$$

Question 267

A beam of light consisting of wavelengths 650 nm and 550 nm illuminates the Young's double slits with separation of 2 mm such that the interference fringes are formed on a screen, placed at a distance of 1.2 m from the slits. The least distance of a point from the central maximum, where the bright fringes due to both the wavelengths coincide, is_____$\times 10^{-5}$ m.

Numerical answer: _____

Enter an integer. Use the units and scaling requested in the question.

Correct answer: 429

Source solution

$y = n\frac{\lambda D}{d}$
$y_1 = y_2$
$n_1\lambda_1\frac{D}{d} = n_2\lambda_2\frac{D}{d}$
$\frac{n_1}{n_2} = \frac{\lambda_2}{\lambda_1} = \frac{550}{650} = \frac{11}{13}$
$y = 11 \times \frac{\lambda_1 D}{d} = \frac{11\times650\times10^{-9}\times1.2}{2\times10^{-3}}$
$y = 429 \times 10^{-5}$

Question 268

In a double slit experiment the distance between the slits is 0.1 cm and the screen is placed at 50 cm from the slits plane. When one slit is covered with a transparent sheet having thickness t and refractive index $n(=1.5)$, the central fringe shifts by 0.2 cm. The value of t is ___ cm.

A. 8×10^{-4}

B. 6.0×10^{-3}

C. 5.6×10^{-4}

D. 5.0×10^{-3}

Correct answer: A

Source solution

The sheet introduces optical path difference $(n-1)t$. The fringe shift is $s = D(n-1)t/d$, so $t = sd/[D(n-1)] = (0.2)(0.1)/[50(0.5)] = 8 \times 10^{-4}$ cm.

Question 269

In Young's double slit arrangement, slits are separated by a gap of 0.5 mm , and the screen is placed at a distance of 0.5 m from them. The distance between the first and the third bright fringe formed when the slits are illuminated by a monochromatic light of $5890\AA$ is :-

A. $1178 \times 10^{-9}\ \mathrm{m}$

B. $1178 \times 10^{-6}\ \mathrm{m}$

C. $1178 \times 10^{-12}\ \mathrm{m}$

D. $5890 \times 10^{-7}\ \mathrm{m}$

Correct answer: B

Source solution

$$\beta = \frac{\lambda D}{d} = \frac{5890 \times 10^{-10} \times 0.5}{0.5 \times 10^{-3}}$$

$$= 5890 \times 10^{-7}\,\mathrm{m} = 589 \times 10^{-6}\,\mathrm{m}$$

The distance between the first and third bright fringes is

$$2\beta = 2 \times 589 \times 10^{-6}\,\mathrm{m}$$

$$= 1178 \times 10^{-6}\,\mathrm{m} = 1.178 \times 10^{-3}\,\mathrm{m} \qquad (2)$$

Question 270

In a Young's double slit experiment set up, the two slits are kept 0.4. mm apart and screen is placed at 1 m from slits. If a thin transparent sheet of thickness $20\mu\ \mathrm{m}$ is introduced in front of one of the slits then centre bring fringe shifts by 20 mm on the screen. The refractive index of transparent sheet is given by $\frac{\alpha}{10}$, where α is

_____

.

Numerical answer: _____

Enter an integer. Use the units and scaling requested in the question.

Correct answer: 14

Source solution

$\mathrm{y_{shift}} = \frac{(\mu-1)\mathrm{t.D}}{\mathrm{d}}$

$$20910^{-3} = \frac{(\mu-1)\times 20\times 10^{-6}\times 1}{0.4\times 10^{-3}}$$

$$(\mu-1) \Rightarrow 0.4$$

$$\mu \Rightarrow 1.4$$

$$\frac{\alpha}{10} = 1.4, \alpha = 14$$

Question 271

The Young's double slit interference experiment is performed using light consisting of 480 nm and 600 nm wavelengths to form interference patterns. The least number of the bright fringes of 480 nm light that are required for the first coincidence with the bright fringes formed by 600 nm light is :-

A. 4

B. 8

C. 6

D. 5

Correct answer: D

Source solution

$$\frac{n_1\lambda_1 D}{d} = \frac{n_2\lambda_2 D}{d}$$

$$n_1\lambda_1 = n_2\lambda_2$$

Given,

$$\lambda_1 = 480\,\text{nm}, \qquad \lambda_2 = 600\,\text{nm}.$$

Therefore,

$$480\,n_1 = 600\,n_2$$

$$4n_1 = 5n_2.$$

For the minimum values of n_1 and n_2,

$$n_1 = 5, \qquad n_2 = 4.$$

Hence,

$$\boxed{n_{1,\min} = 5}$$

Question 272

In the Young's double slit experiment the intensity produced by each one of the individual slits is I_0. The distance between two slits is 2 mm. The distance of screen from slits is 10 m. The wavelength of light is $6000\AA$. The intensity of light on the screen in front of one of the slits is

_____

.

A. $2I_0$

B. I_0

C. $\frac{I_0}{2}$

D. $4I_0$

Correct answer: B

Source solution

$\mathrm{d} = 2\ \mathrm{mm}$

$$D = 10m$$
$$\lambda = 6000\AA$$
$$y = \frac{d}{2}(\text{ in front of one slit })$$
$$I = 4I_0 \cos^2\left(\frac{2\pi}{\lambda} \cdot \frac{y}{D} d\right)$$
$$\Rightarrow I = I_0$$

Question 273

In a Young's double slit experiment, the slits are placed 0.320 mm apart. Light of wavelength $\lambda = 500\ \text{nm}$ is incident on the slits. The total number of bright fringes that are observed in the angular range $-30^\circ \leq \theta \leq 30^\circ$ is:

A. 320

B. 641

C. 321

D. 640

Correct answer: B

Source solution

$$d \sin\theta = n\lambda$$

where d is the slit separation, λ is the wavelength, and n is the order of the maxima.

$$0.32 \times 10^{-3} \sin 30^\circ = n\,(500 \times 10^{-9})$$

$$0.32 \times 10^{-3} \times \frac{1}{2} = n\,(500 \times 10^{-9})$$

$$n = \frac{0.16 \times 10^{-3}}{500 \times 10^{-9}} = 320$$

Hence, the total number of maxima observed in the angular range

$$-30^\circ \leq \theta \leq 30^\circ$$

is

$$N = 320 + 1 + 320 = 641.$$

Question 274

Two coherent light sources having intensity in the ratio $2x$ produce an interference pattern. The ratio $\frac{I_{max} - I_{min}}{I_{max} + I_{min}}$ will be :

A. $\frac{2\sqrt{2x}}{x+1}$

B. $\frac{\sqrt{2x}}{2x+1}$

C. $\frac{2\sqrt{2x}}{2x+1}$

D. $\frac{\sqrt{2x}}{x+1}$

Correct answer: C

Source solution

Sol. Let $\mathrm{I_1} = 2x, \mathrm{I_2} = 1$,

$$\mathrm{I_{max}} = \left(\sqrt{\mathrm{I_1}} + \sqrt{\mathrm{I_2}}\right)^2$$

$$\mathrm{I_{min}} = \left(\sqrt{\mathrm{I_1}} - \sqrt{\mathrm{I_2}}\right)^2$$

$$\frac{I_{max} - I_{min}}{I_{max} + I_{min}} = \frac{(\sqrt{2x}+1)^2 - (\sqrt{2x}-1)^2}{(\sqrt{2x}+1)^2 + (\sqrt{2x}-1)^2}$$

$$= \frac{4\sqrt{2x}}{2+4x} = \frac{2\sqrt{2x}}{1+2x}$$

Question 275

The figure shows a Young's double slit experimental setup. It is observed that when a thin transparent sheet of thickness t and refractive index μ is put in front of one of the slits, the central maximum gets shifted by a distance equal to n fringe widths. If the wavelength of light used is λ, t will be

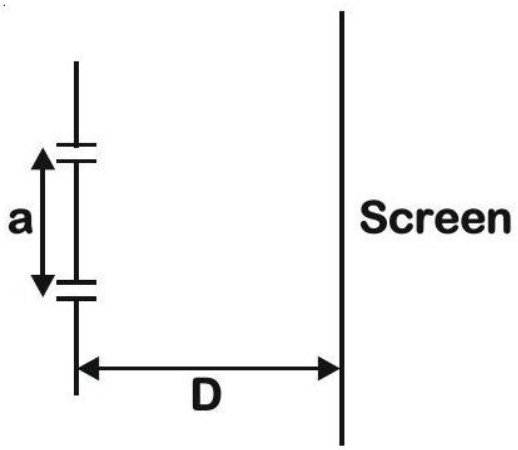

A. $\frac{n\lambda}{\mu-1}$

B. $\frac{2D\lambda}{a(\mu-1)}$

C. $\frac{nD\lambda}{a(\mu-1)}$

D. $\frac{D\lambda}{a(\mu-1)}$

The original exam question had no correct option and was marked BONUS. For this corrected practice version, option 1 has been replaced with the correct value; the original statement and the other three options are retained.

Correct answer: A

Source solution

The inserted sheet adds optical path $(\mu-1)t$. A shift of n fringe widths corresponds to path difference $n\lambda$. Thus $t = n\lambda/(\mu-1)$, independent of D and slit separation a.

Question 276

In a Young's double slits experiment, the ratio of amplitude of light coming from slits is $\mathbf{2:1}$. The ratio of the maximum to minimum intensity in the interference pattern is :Option :}

A. $\mathbf{9:4}$

B. $\mathbf{9:1}$

C. $\mathbf{2:1}$

D. $\mathbf{25:9}$

Correct answer: B

Source solution

Sol. Given that

$$\frac{\mathrm{A_1}}{\mathrm{A_2}} = \frac{2}{1}$$

$$\frac{I_{\max}}{I_{\min}} = \left(\frac{A_1 + A_2}{A_1 - A_2}\right)^2 = \frac{9}{1} = 9:1$$

Question 277

The width of one of the two slits in a Young's double slit experiment is three times the other slit. If the amplitude of the light coming from a slit is proportional to the slit-width, the ratio of minimum to maximum intensity in the interference pattern is x : 4 where x is ___.

Numerical answer: _____

Enter the requested integer (0 decimal places).

Correct answer: 1

Source solution

Given amplitude $\propto$ slit width Also intensity $\propto$ (Amplitude) $^2 \propto$ (Slit width) ^{2}

$$\frac{I_1}{I_2} = \left(\frac{3}{1}\right)^2 = 9 \Rightarrow I_1 = 9I_2$$

$$\frac{I_{\min}}{I_{\max}} = \left(\frac{\sqrt{I_1} - \sqrt{I_2}}{\sqrt{I_1} + \sqrt{I_2}}\right)^2 = \left(\frac{3-1}{3+1}\right)^2 = \frac{1}{4} = \frac{x}{4}$$

$$\Rightarrow x = 1.00$$

Question 278

In Young's double slit experiment, light from two identical sources are superimposing on a screen. The path difference between the two lights reaching at a point on the screen is $\frac{7\lambda}{4}$. The ratio of intensity of fringe at this point with respect to the maximum intensity of the fringe is :

A. $1/2$

B. $3/4$

C. $1/3$

D. $1/4$

Correct answer: A

Source solution

$$\Delta x = \frac{7\lambda}{4}$$

$$\phi = \frac{2\pi}{\lambda}\Delta x = \frac{2\pi}{\lambda}\cdot\frac{7\lambda}{4} = \frac{7\pi}{2}$$

$$I = I_{\max}\cos^2\left(\frac{\phi}{2}\right)$$

$$\frac{I}{I_{\max}} = \cos^2\left(\frac{\phi}{2}\right) = \cos^2\left(\frac{7\pi}{4}\right)$$

$$= \cos^2\left(2\pi - \frac{\pi}{4}\right)$$

$$= \cos^2\left(\frac{\pi}{4}\right)$$

$$= \left(\frac{1}{\sqrt{2}}\right)^2 = \frac{1}{2}$$

$$\boxed{\frac{I}{I_{\max}} = \frac{1}{2}}$$

Question 279

Interference fringes are observed on a screen by illuminating two thin slits 1 mm apart with a light source ($\lambda = 632.8\ \text{nm}$). The distance between the screen and the slits is 100 cm . If a bright fringe is observed on screen at a distance of 1.27 mm from the central bright fringe, then the path difference between the waves, which are reaching this point from the slits is close to:

A. $2.05\mu\ \text{m}$

B. 2.87 nm

C. 2 nm

D. $1.27\mu\ \text{m}$

Correct answer: D

Source solution

$$\text{Given:}\quad d = 1\,\text{mm},\quad \lambda = 632.8\,\text{nm},\quad D = 100\,\text{cm},\quad y = 1.27\,\text{mm}$$

$$\Delta x = d\sin\theta$$

Since θ is small,

$$\sin\theta \approx \tan\theta = \frac{y}{D}.$$

Therefore,

$$\Delta x = d\tan\theta = \frac{dy}{D}.$$

$$\Delta x = \frac{(1\times10^{-3}\,\text{m})(1.27\times10^{-3}\,\text{m})}{100\times10^{-2}\,\text{m}}$$

$$= 1.27\times10^{-6}\,\text{m} = 1.27\,\mu\text{m}.$$

$$\boxed{\Delta x = 1.27\,\mu\text{m}}$$

Dual Nature of Radiation and Matter

Questions 280-287 / 8 selected / 2.7% practice weight / Next

Question 280

A light beam of wavelength 500 nm is incident on a metal having work function of 1.25 eV, placed in a magnetic field of intensity B. The electrons emitted perpendicular to the magnetic field B, with maximum kinetic energy are bent into circular arc of radius 30 cm. The value of B is ___ $\times 10^{-7}\ \mathrm{T}$

Numerical answer: _____

Enter the requested integer (0 decimal places).

Correct answer: 125

Source solution

By photoelectric equation

$$\frac{hc}{\lambda} - \phi = k_{max}$$

$$k_{max} = \frac{1240}{500} - 1.25 \approx 1.25$$

$$r = \frac{\sqrt{2mk}}{eB}$$

$$B = \frac{\sqrt{2mk}}{er}$$

$$= 125 \times 10^{-7}\ \mathrm{T}$$

Question 281

The ratio of de Broglie wavelength of a deutron with kinetic energy E to that of an alpha particle with kinetic energy $2E$, is $n : 1$. The value of n is _____.
(Assume mass of proton = mass of neutron) :

Numerical answer: _____

Enter an integer. Use the units and scaling requested in the question.

Correct answer: 2

Source solution

$\lambda = \frac{h}{mv} = \frac{h}{\sqrt{2\,m \cdot KE}}$

$$\frac{\lambda_d}{\lambda_\alpha} = \sqrt{\frac{m_\alpha \cdot KE_\alpha}{m_d \cdot KE_d}} = \sqrt{\frac{4\,m \cdot 2E}{2\,m \cdot E}} = 2 : 1$$

Question 282

Two stream of photons, possessing energies equal to twice and ten times the work function of metal are incident on the metal surface successively. The value of ratio of maximum velocities of the photoelectrons emitted in the two respective cases is $x : y$. The value of x is .

Numerical answer: _____

Enter the requested value (an integer; 0 decimal places). Use the units and scaling stated in the question.

Correct answer: 1

Source solution

Forphotoelectric effectk. $E_{max} = E - \phi$
$E_1 = 2\phi, \quad k_1 = \phi$
$E_2 = 10\phi, \quad k_2 = 9\phi$
$\therefore V \propto \sqrt{k} \quad \left(k = \frac{1}{2}mv^2\right)$
$\frac{v_1}{v_2} = \sqrt{\frac{1}{9}} \Rightarrow \frac{1}{3} = \frac{x}{y}$
$x = 1$

Question 283

A parallel beam of light of wavelength 900 nm and intensity $100\mathrm{Wm}^{-2}$ is incident on a surface perpendicular to the beam. Tire number of photons crossing $1\ \mathrm{cm}^2$ area perpendicular to the beam in one second is :

A. 3×10^{16}

B. 4.5×10^{16}

C. 4.5×10^{17}

D. 4.5×10^{20}

Correct answer: B

Source solution

$$\lambda = 900 \times 10^{-9}\,\mathrm{m}, \quad I = 100\,\mathrm{W\,m^{-2}}$$

$$\text{Energy incident per second on area } A: \quad E = IA$$

$$\text{Energy of one photon: } E_p = \frac{hc}{\lambda}$$

$$\text{Number of photons per second: } \quad n = \frac{IA}{E_p} = \frac{IA\lambda}{hc}$$

$$n = \frac{(100)\,(1 \times 10^{-4})\,(900 \times 10^{-9})}{(6.62 \times 10^{-34})(3 \times 10^{8})}$$

$$n = 4.5 \times 10^{16}$$

$$\boxed{n = 4.5 \times 10^{16} \text{ photons s}^{-1}}$$

Question 284

A particle having electric charge $3 \times 10^{-19}\text{C}$ and mass 6×10^{-27} kg is accelerated by applying an electric potential of 1.21 V. Wavelength of the matter wave associated with the particle is $\alpha \times 10^{-12}$ m. The value of α is

_____

.

(Take Planck's constant $= 6.6 \times 10^{-34}$ J. s)

Numerical answer: _____

Enter an integer. Use the units and scaling requested in the question.

Correct answer: 10

Source solution

$\lambda = \frac{\text{h}}{\sqrt{2\text{mqV}}}$

$$\lambda = \frac{6.6 \times 10^{-34}}{\sqrt{2 \times 18 \times 10^{-46} \times 1.21}}$$
$$\lambda = 10^{-11} \text{ m} = 10 \times 10^{-12} \text{ m}$$
$$\alpha = 10$$

Question 285

An α particle and a carbon 12 atom has same kinetic energy K . The ratio of their de-Broglie wavelength $(\lambda_a : \lambda_{C12})$ is :

A. $1 : \sqrt{3}$

B. $\sqrt{3} : 1$

C. $3 : 1$

D. $2 : \sqrt{3}$

Correct answer: B

Source solution

$$K = \frac{p^2}{2m} \Rightarrow p \propto \sqrt{m}$$

$$\lambda = \frac{h}{p} \Rightarrow \lambda \propto \frac{1}{p} \Rightarrow \lambda \propto \frac{1}{\sqrt{m}}$$

$$\frac{\lambda_\alpha}{\lambda_{C^{12}}} = \sqrt{\frac{m_{C^{12}}}{m_\alpha}} = \sqrt{\frac{12}{4}} = \sqrt{3}$$

$$\boxed{\frac{\lambda_\alpha}{\lambda_{C^{12}}} = \sqrt{3}}$$

Question 286

Light is incident on a metallic plate having work function $110 \times 10^{-20}\ \mathbf{J}$. If the produced photoelectrons have zero kinetic energy then the angular frequency of the incident light is

_____

rad/s. $\left(\mathbf{h} = 6.63 \times 10^{-34}\ \mathbf{J.s}\right)$

A. 1.04×10^{16}

B. 1.04×10^{13}

C. 1.66×10^{16}

D. 1.66×10^{15}

Correct answer: A

Source solution

$\phi = hv$

$$v = \frac{\phi}{\mathbf{h}}$$

$$\omega = 2\pi\nu = \frac{2\pi\phi}{h} = \frac{2 \times 3.14 \times 110 \times 10^{-2}}{6.63 \times 10^{-34}}$$

$$\omega = 1.04 \times 10^{16}\mathrm{rad/sec}$$

Question 287

A photo-emissive substance is illuminated with a radiation of wavelength λ_i so that it releases electrons with de-Broglie wavelength λ_e. The longest wavelength of radiation that can emit photoelectron is λ_0. Expression for de-Broglie wavelength is given by :(m : mass of the electron, h : Planck's constant and c : speed of light)

A. $\lambda_e = \sqrt{\frac{h}{2mc\left(\frac{1}{\lambda_i}-\frac{1}{\lambda_0}\right)}}$

B. $\lambda_e = \sqrt{\frac{h\lambda_0}{2mc}}$

C. $\lambda_e = \frac{h}{\sqrt{2mc\left(\frac{1}{\lambda_i}-\frac{1}{\lambda_0}\right)}}$

D. $\lambda_e = \sqrt{\frac{h\lambda_i}{2mc}}$

Correct answer: A

Source solution

$K.E = E - W$

$$\lambda_e = \frac{h}{\sqrt{2m \cdot K.E}}, \quad E = \frac{h \cdot c}{\lambda_i}, \quad W = \frac{h \cdot c}{\lambda_0}$$

$$\frac{h^2}{2m \cdot \lambda_e^2} = \frac{h \cdot c}{\lambda_i} - \frac{h \cdot c}{\lambda_0}$$

$$\lambda_e = \sqrt{\frac{h}{2m \cdot c\left(\frac{1}{\lambda_i} - \frac{1}{\lambda_0}\right)}}$$

Atoms

Questions 288-289 / 2 selected / 0.7% practice weight / Consolidate

Question 288

Find the ratio of energies of photons produced due to transition of an election of hydrogen atom from its(i) second permitted energy level to the first level, and (ii) the highest permitted energy level to the first permitted level.

A. $3:4$

B. $4:3$

C. $1:4$

D. $4:1$

Correct answer: A

Source solution

$$E_n = -\frac{13.6}{n^2}\,\text{eV}$$

For the ground state,

$$E_1 = -13.6\,\text{eV}$$

For the first excited state,

$$E_2 = -\frac{13.6}{4} = -3.4\,\text{eV}$$

For ionization,

$$E_\infty = 0$$

Therefore,

$$\frac{E_2 - E_1}{E_\infty - E_1} = \frac{-3.4 - (-13.6)}{0 - (-13.6)}$$

$$= \frac{10.2}{13.6}$$

$$= \frac{13.6\left(1 - \frac{1}{4}\right)}{13.6}$$

$$= \frac{3}{4}$$

$$\boxed{\frac{E_2 - E_1}{E_\infty - E_1} = \frac{3}{4}}$$

Question 289

The minimum energy required by a hydrogen atom in ground state to emit radiation in Balmer series is nearly :

A. 1.5 eV

B. 13.6 eV

C. 1.9 eV

D. 12.1 eV

Correct answer: D

Source solution

$$\Delta E = 13.6\left(1 - \frac{1}{3^2}\right)$$

$$= 13.6\left(1 - \frac{1}{9}\right)$$

$$= 13.6 \times \frac{8}{9}$$

$$\Delta E \approx 12.1\,\text{eV}$$

Hence, the transition is

$$\boxed{n = 1 \rightarrow n = 3}$$

and the corresponding energy absorbed is

$$\boxed{\Delta E = 12.1\,\text{eV}}.$$

Semiconductor Electronics: Materials, Devices and Simple Circuits

Question 290

Which of the following circuits has the same output as that of the given circuit?

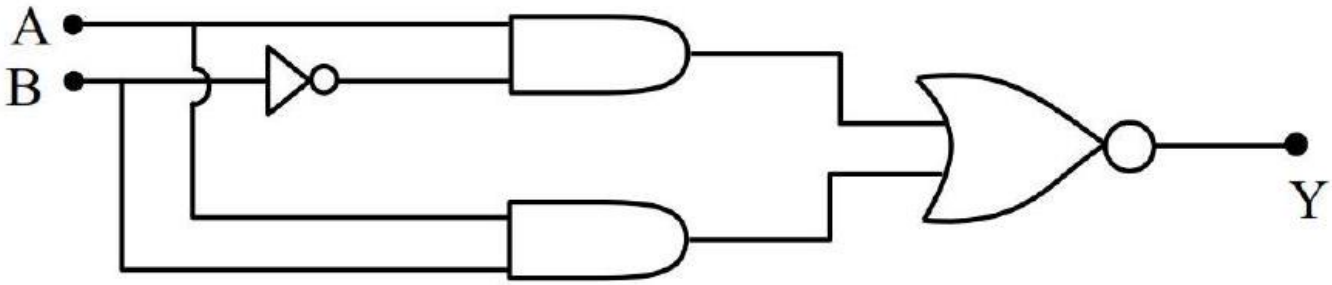

A.

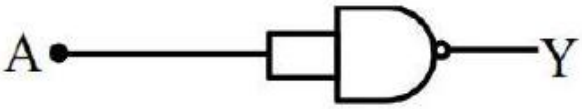

B.

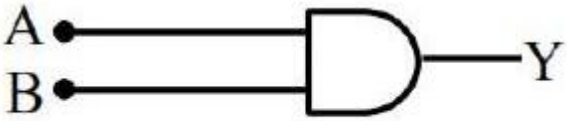

C.

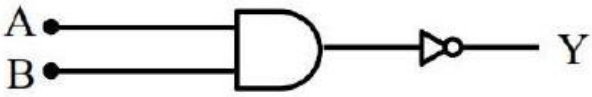

D.

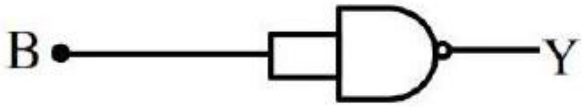

(3)

Correct answer: A

Source solution

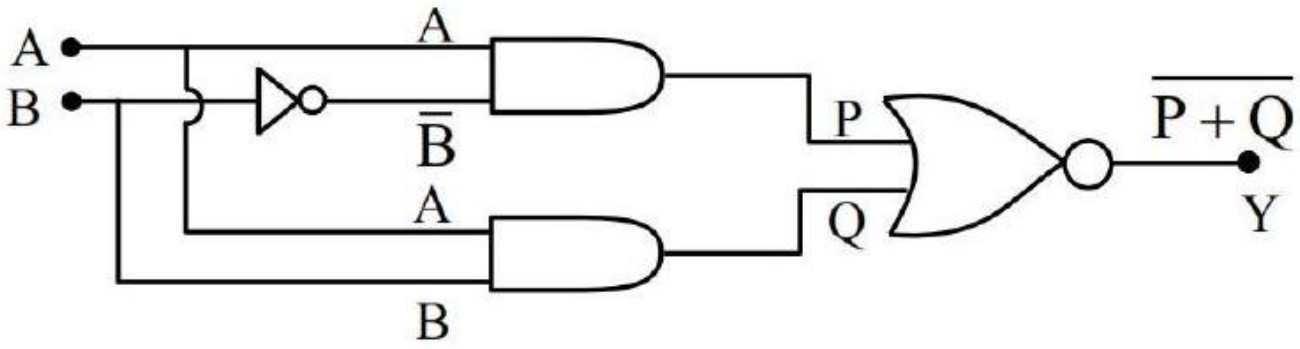

$$P = A \cdot \overline{B}$$
$$Q = A \cdot B$$
$$Y = \overline{P+Q} = \overline{A \cdot \overline{B} + A \cdot B}$$
$$= \overline{A \cdot (B + \overline{B})} = \overline{A \cdot 1}$$
$$Y = \overline{A}$$

Question 291

In the given circuit- the value of current $\mathbf{I_L}$ will be

mA .

(When $\mathbf{R_L = 1k\Omega}$)

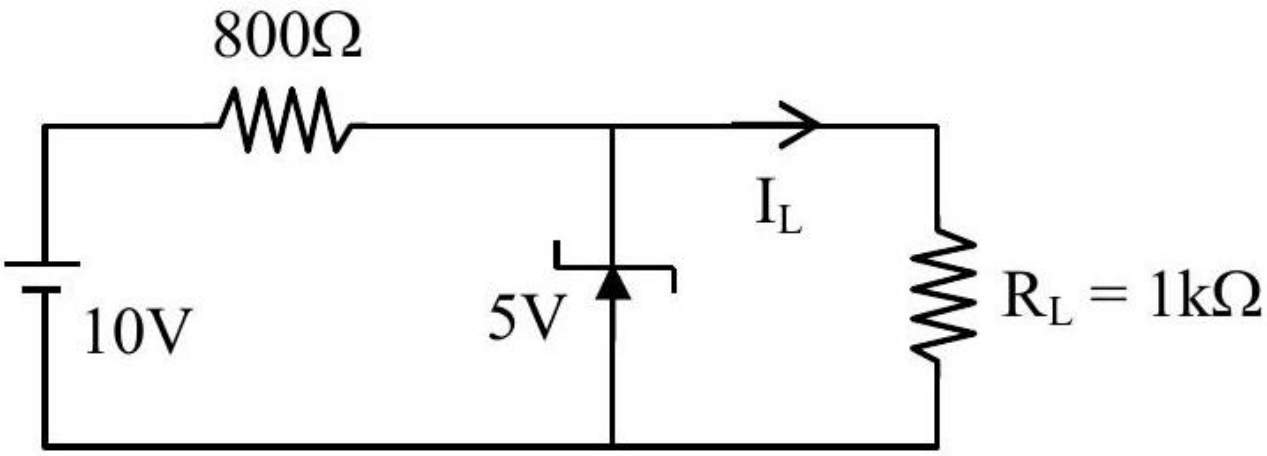

Numerical answer: _____

Enter the requested value or coefficient rounded to the nearest integer (0 decimal places).

Correct answer: 5

Source solution

$I_L = \frac{5}{1000} = 5\ \mathrm{mA}$

Question 292

In the following logic circuit the sequence of the inputs A, B are $(0,0),(0,1),(1,0)$ and $(1,1)$. The output Y for this sequence will be :

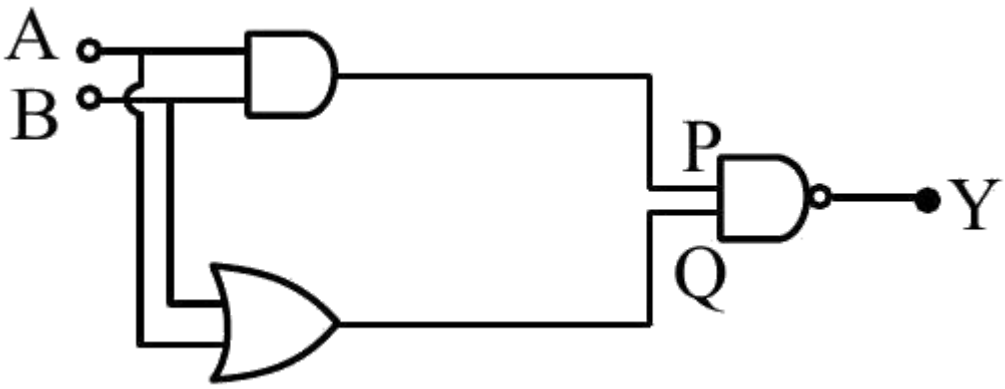

A. $1,0,1,0$

B. $0,1,0,1$

C. $1,1,1,0$

D. $0,0,1,1$

Correct answer: C

Source solution

$$\mathrm{Y}=\overline{(\mathrm{A}\cdot\mathrm{B})\cdot(\mathrm{A}+\mathrm{B})}$$

$\mathrm{Y}_{(0,0)}=1, \mathrm{Y}_{(0,1)}=1, \mathrm{Y}_{(1,0)}=1, \mathrm{Y}_{(1,1)}=0$

Question 293

The output of the circuit is low (zero) for :(A) $\mathbf{X = 0, Y = 0}$(B) $\mathbf{X = 0, Y = 1}$(C) $\mathbf{X = 1, Y = 0}$(D) $\mathbf{X = 1, Y = 1}$Choose the correct answer from the options given below:

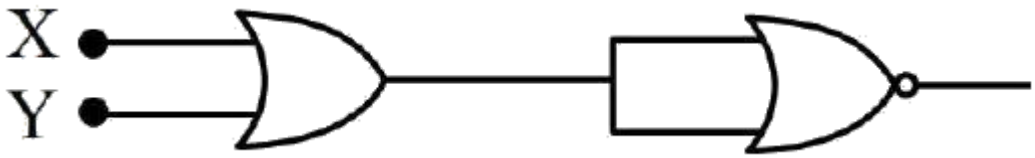

A. (A), (C) and (D) only

B. (A), (B) and (C) only

C. (B), (C) and (D) only

D. (A), (B) and (D) only

Correct answer: C

Source solution

Sol.

x	y	Y
0	0	1
0	1	0
1	0	0
1	1	0

Question 294

Choose the correct logic circuit for the given truth table having inputs A and B.

A	B	Y
0	0	0
0	1	0
1	0	1
1	1	1

A.

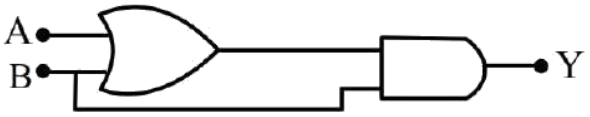

B.

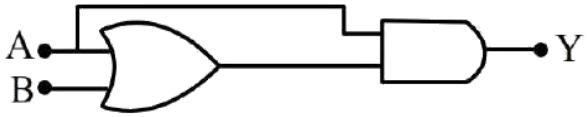

C.

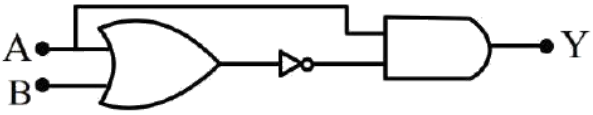

D.

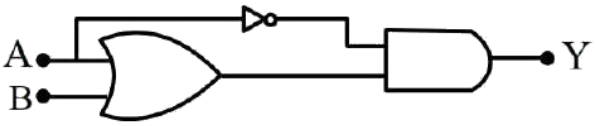

Correct answer: B

Source solution

Sol. Only option (2) matches with the truth table.

Question 295

The truth table of the given circuit diagram is :A B Y0 0 1

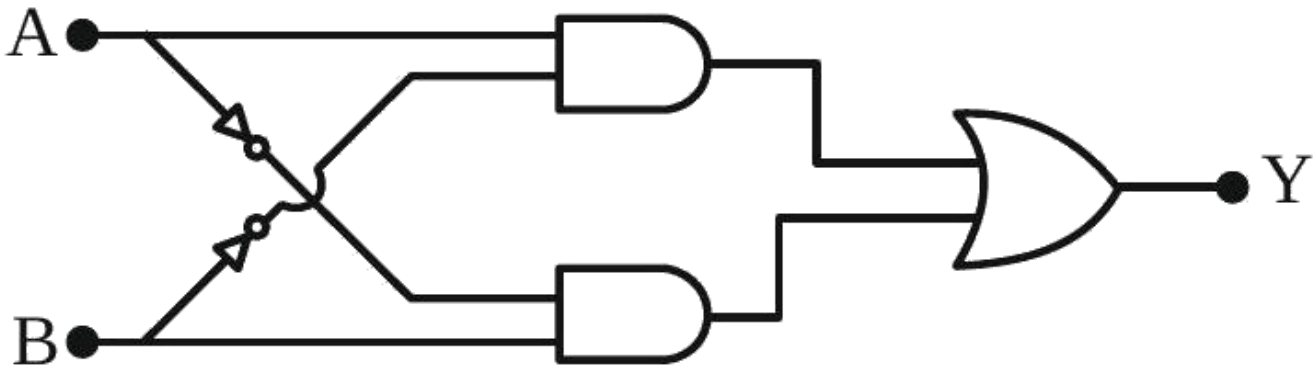

A.

A	B	Y
0	0	0
0	1	0
1	0	0
1	1	1

B.

A	B	Y
0	0	0
0	1	1
1	0	1
1	1	0

C.

A	B	Y
0	0	0
0	1	0
1	0	0
1	1	1

D.

A	B	Y
0	0	1
0	1	1
1	0	1
1	1	0

Correct answer: B

Source solution

$$Y = A \cdot \overline{B} + \overline{A} \cdot B$$

The output is 1 when exactly one of the inputs is 1.

A	B	Y
0	0	0
0	1	1
1	0	1
1	1	0

$$\therefore Y = A \oplus B$$

XOR Gate

Question 296

For the logic circuit shown, the output waveform at Y is:

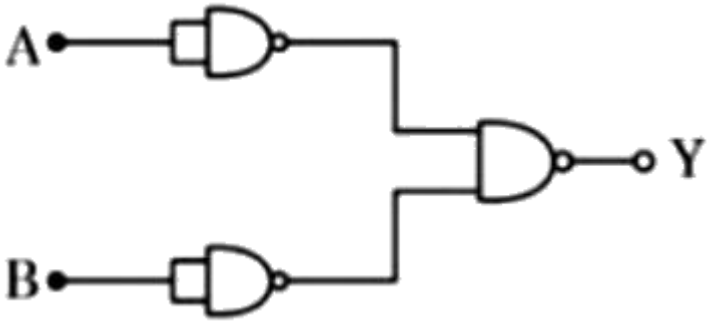

A.

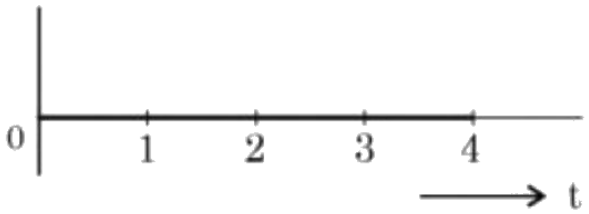

B.

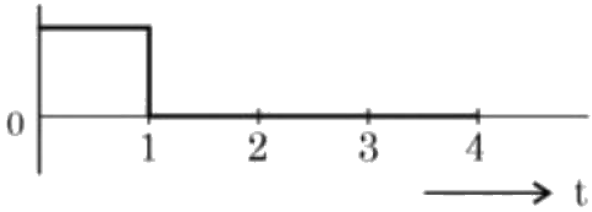

C.

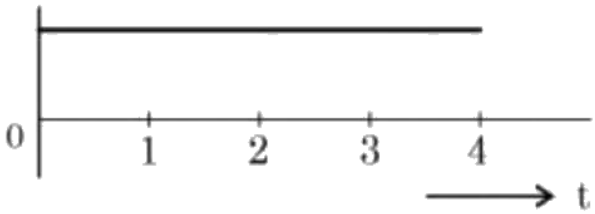

D.

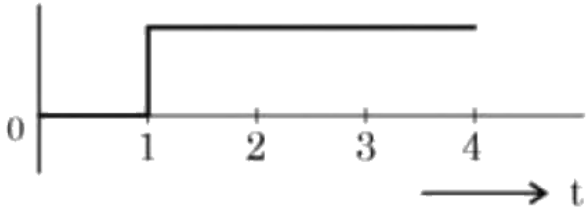

Correct answer: D

Source solution

A	B	Y
0	0	0
0	1	1
1	0	1
1	1	1

According to the truth table, the resultant graph is

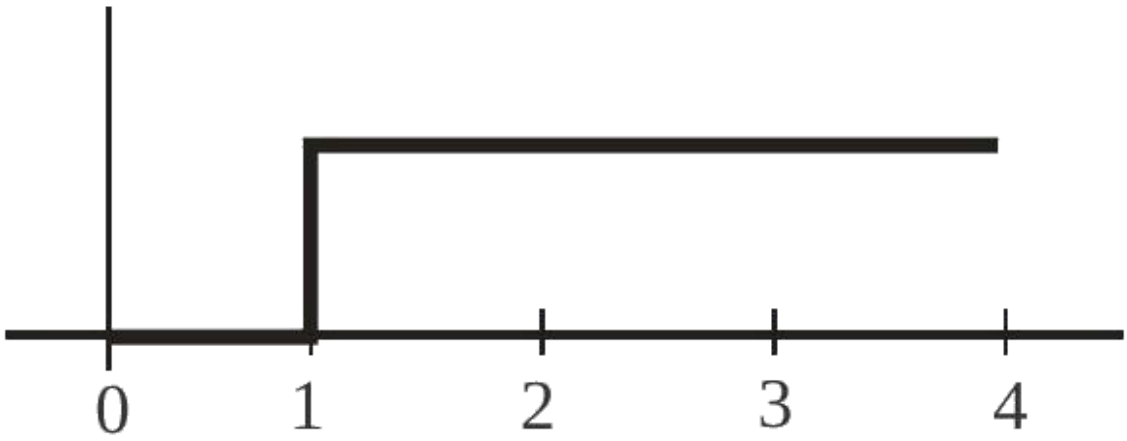
0
1
2
3
4

Communication Systems

Questions 297-300 / 4 selected / 1.3% practice weight / Historical appendix

Question 297

A transmitting antenna has a height of 320 m and that of receiving antenna is 2000 m . The maximum distance between them for satisfactory communication in line of sight mode is ' d '. The value of ' d ' is km .

Numerical answer: _____

Enter the requested value (an integer; 0 decimal places). Use the units and scaling stated in the question.

Correct answer: 224

Source solution

$$d_m = \sqrt{2\,\mathrm{Rh}_T} + \sqrt{2\,\mathrm{Rh}_R}$$
$$\mathrm{d_m} = \left(\sqrt{2 \times 6400 \times 10^3 \times 320} + \sqrt{2 \times 6400 \times 10^3 \times 2000}\right)\mathrm{m}$$

$$\mathrm{d_m} = 224\ \mathrm{km}$$

Question 298

A carrier wave with amplitude of 250 V is amplitude modulated by a sinusoidal base band signal of amplitude 150 V. The ratio of minimum amplitude to maximum amplitude for the amplitude modulated wave is 50 : x, then value of x is ___

Numerical answer: _____

Enter the requested integer (0 decimal places).

Correct answer: 200

Source solution

$$A_{\max} = A_C + A_m = 250 + 150 = 400$$
$$A_{\min} = A_C - A_m = 250 - 150 = 100$$
$$\frac{A_{\min}}{A_{\max}} = \frac{100}{400} = \frac{1}{4} = \frac{5}{200}$$
$$x = 200$$

Question 299

Match List-I with List-II.

List-I	List-II
(A) Facsimile	(I) Static Document Image
(B) Guided media Channel	(IV) Optical Fiber
(C) Frequency Modulation	(II) Local Broadcast Radio
(D) Digital Signal	(III) Rectangular wave

Choose the correct answer from the following options:

A. A -IV, B-III, C-II, D-I

B. A-I, B-IV, C-II, D-III

C. A -IV, B-II, C-III, D-I

D. A-I, B-II, C-III, D-IV

Correct answer: B

Source solution

(A) Facsimile $\rightarrow$ (I) Static Document Image

(B) Guided Media Channel $\rightarrow$ (IV) Optical Fiber

(C) Frequency Modulation $\rightarrow$ (II) Local Broadcast Radio

(D) Digital Signal $\rightarrow$ (III) Rectangular Wave

$$\boxed{A \rightarrow I,\ B \rightarrow IV,\ C \rightarrow II,\ D \rightarrow III}$$

Question 300

Match List-I with List-II.

List-I	List-II
(a) Attenuation	(i) Loss of strength of a signal while propagating through a medium
(b) Transducer	(ii) Converts one form of energy into another
(c) Demodulation	(iii) Process of retrieval of information from the carrier wave at receiver
(d) Repeater	(iv) Combination of a receiver and transmitter

Choose the correct answer from the options given below:

A. A-IV, B-III, C-I, D-II

B. A-I, B-II, C-III, D-IV

C. A-IV, B-III, C-II, D-I

D. A-II, B-III, C-IV, D-I

Correct answer: B

Source solution

$$\text{Attenuation} \rightarrow \text{Loss of strength of a signal} \rightarrow (i)$$

$$\text{Transducer} \rightarrow \text{Converts one form of energy into another} \rightarrow (ii)$$

$$\text{Demodulation} \rightarrow \text{Retrieval of information from the carrier wave} \rightarrow (iii)$$

$$\text{Repeater} \rightarrow \text{Combination of a receiver and transmitter} \rightarrow (iv)$$
