LEARNE2I / PRIORITY PRACTICE

JEE Main 2025 Session 2

Physics
Solutions companion

300 questions / NCERT chapter navigation
Answers and available source solutions, in paper order.

Use the question numbers from the companion question paper. Brief source answers are identified wherever a detailed solution is unavailable.

Solutions on your phone

Scan to choose a chapter or question. You can also download all three solutions PDFs together.

learne2i.com/jee-main/revision-archive/2025-session-2/

Open the PDF bookmarks panel on the left to jump between chapters. The chapter links in the guide are clickable too.

YOUR PRACTICE ROADMAP

Chapter & topic priorities

For this Session 2 collection, begin with **Wave Optics; Ray Optics and Optical Instruments; Current Electricity**. These chapters have the largest share of the selected questions.

Practice weight = questions selected from a chapter / 300. Topic percentages use that chapter's question count. These are practice priorities from the prediction output, not guaranteed exam marks or probabilities.

NCERT chapter / leading topics	Priority	Questions	Weight
Units and Measurements Vernier calipers: 2 (50.0%) / Dimensional analysis: 1 (25.0%) / Significant figures: 1 (25.0%)	Consolidate	1-4 (4)	1.3%
Motion in a Straight Line Kinematics: 8 (50.0%) / Equations of motion: 6 (37.5%) / Motion graphs: 1 (6.3%) / More topics in chapter guide	Focus first	5-20 (16)	5.3%
Motion in a Plane Equations of motion: 3 (42.9%) / Projectile motion: 2 (28.6%) / Vectors and relative motion: 2 (28.6%)	Next	21-27 (7)	2.3%
Laws of Motion Newtonian mechanics: 8 (80.0%) / Friction: 1 (10.0%) / Newton's second law: 1 (10.0%)	Next	28-37 (10)	3.3%
Work, Energy and Power Work-energy theorem: 10 (58.8%) / Work and energy: 7 (41.2%)	Focus first	38-54 (17)	5.7%
System of Particles and Rotational Motion Momentum and rotation: 4 (50.0%) / Rotational dynamics: 4 (50.0%)	Next	55-62 (8)	2.7%
Gravitation Acceleration due to gravity: 2 (100.0%)	Consolidate	63-64 (2)	0.7%
Mechanical Properties of Solids Elasticity: 6 (75.0%) / Longitudinal strain: 1 (12.5%) / Young's modulus: 1 (12.5%)	Next	65-72 (8)	2.7%
Thermal Properties of Matter Thermal properties: 2 (66.7%) / Calorimetry: 1 (33.3%)	Consolidate	73-75 (3)	1.0%
Thermodynamics First law of thermodynamics: 7 (46.7%) / Thermodynamic processes: 4 (26.7%) / Thermodynamics: 2 (13.3%) / More topics in chapter guide	Focus first	76-90 (15)	5.0%
Kinetic Theory Kinetic molecular theory: 7 (63.6%) / Degrees of freedom and equipartition: 2 (18.2%) / Ideal gas law: 1 (9.1%) / More topics in chapter guide	Next	91-101 (11)	3.7%

NCERT chapter / leading topics	Priority	Questions	Weight
Oscillations Oscillatory motion: 2 (66.7%) / Simple harmonic motion: 1 (33.3%)	Consolidate	102-104 (3)	1.0%
Waves Wave motion: 23 (100.0%)	Focus first	105-127 (23)	7.7%
Electric Charges and Fields Electric field: 4 (44.4%) / Electric fields and forces: 3 (33.3%) / Electric Charges and Fields: 1 (11.1%) / More topics in chapter guide	Next	128-136 (9)	3.0%
Electrostatic Potential and Capacitance Electric potential and capacitors: 3 (100.0%)	Consolidate	137-139 (3)	1.0%
Current Electricity Electric circuits: 13 (52.0%) / Ohm's law: 5 (20.0%) / Circuit analysis: 4 (16.0%) / More topics in chapter guide	Focus first	140-164 (25)	8.3%
Moving Charges and Magnetism Magnetic force and field: 10 (50.0%) / Magnetic field due to currents: 4 (20.0%) / Ampere's circuital law: 2 (10.0%) / More topics in chapter guide	Focus first	165-184 (20)	6.7%
Magnetism and Matter Magnetic dipoles: 1 (50.0%) / Magnetism and Matter: 1 (50.0%)	Consolidate	185-186 (2)	0.7%
Electromagnetic Induction Inductance and induced emf: 9 (39.1%) / Faraday's law: 7 (30.4%) / Mutual inductance: 4 (17.4%) / More topics in chapter guide	Focus first	187-209 (23)	7.7%
Alternating Current Series LCR resonance: 4 (66.7%) / AC circuits: 2 (33.3%)	Next	210-215 (6)	2.0%
Electromagnetic Waves Electromagnetic spectrum: 2 (50.0%) / Electromagnetic waves: 2 (50.0%)	Consolidate	216-219 (4)	1.3%
Ray Optics and Optical Instruments Lens formula: 21 (77.8%) / Geometrical optics: 4 (14.8%) / Mirror formula: 1 (3.7%) / More topics in chapter guide	Focus first	220-246 (27)	9.0%
Wave Optics Young's double-slit interference: 24 (80.0%) / Interference of light: 2 (6.7%) / Wave Optics: 2 (6.7%) / More topics in chapter guide	Focus first	247-276 (30)	10.0%
Dual Nature of Radiation and Matter Photoelectric equation: 6 (42.9%) / de Broglie wavelength: 3 (21.4%) / Dual Nature of Radiation and Matter: 2 (14.3%) / More topics in chapter guide	Focus first	277-290 (14)	4.7%
Atoms Excitation and ionisation energy: 1 (100.0%)	Consolidate	291-291 (1)	0.3%
Nuclei Nuclear fission: 1 (50.0%) / Radioactive decay law: 1 (50.0%)	Consolidate	292-293 (2)	0.7%

NCERT chapter / leading topics	Priority	Questions	Weight
Semiconductor Electronics: Materials, Devices and Simple Circuits Logic gates: 2 (50.0%) / Electronic circuits and logic gates: 1 (25.0%) / Semiconductor devices: 1 (25.0%)	Consolidate	294-297 (4)	1.3%
Communication Systems Historical appendix / omitted source chapter Communication systems: 2 (66.7%) / Amplitude modulation: 1 (33.3%)	Historical appendix	298-300 (3)	1.0%

How to use the priorities

1. Rank chapters by their selected question counts. Ties follow NCERT book order.
2. Focus first: chapters starting within the first 70% of selected, non-historical questions. Next: the following 20%. Consolidate: the remainder. A chapter crossing a threshold stays together.
3. Topic counts use the question's existing core concept, falling back to topic and then chapter. Each question is counted once. Full topic lists begin each chapter.
4. Historical/omitted chapters stay in a separate appendix. Their presence is not a recommendation that they are in the target examination syllabus.

Names follow NCERT Classes XI and XII. Practical chemistry is identified as a laboratory-manual section. Percentages are rounded and may not add to exactly 100.0%. Chapters with no selected questions are not listed; this does not mean they have no exam importance.

Chapter naming references: NCERT textbooks.

Units and Measurements

Questions 1-4 / 4 selected / 1.3% practice weight / Consolidate

Question 1

In a vernier calliper, when both jaws touch each other, zero of the vernier scale shifts towards left and its 4th division coincides exactly with a certain division on main scale. If 50 vernier scale divisions equal to 49 main scale divisions and zero error in the instrument is 0.04 mm then how many main scale divisions are there in 1 cm ?

A. 40

B. 5

C. 20

D. 10

NTA

Correct answer: C

Source solution

Given that the 4th vernier division coincides with the 3rd main scale division,

$$4\,\text{VSD} - 3\,\text{MSD} = 0.004\,\text{cm}.$$

Also,

$$50\,\text{VSD} = 49\,\text{MSD}.$$

Hence,

$$1\,\text{VSD} = \frac{49}{50}\,\text{MSD}.$$

Let

$$1\,\text{MSD} = \frac{1}{N}\,\text{cm}.$$

Substituting,

$$0.004 = 4\left(\frac{49}{50}\,\text{MSD}\right) - 3\,\text{MSD}.$$

$$0.004 = \left(\frac{196}{50} - 3\right)\frac{1}{N}.$$

$$0.004 = \frac{46}{50}\cdot\frac{1}{N}.$$

Therefore,

$$N = \frac{46}{50}\cdot\frac{1}{0.004}.$$

$$N = \frac{46}{50}\cdot\frac{1000}{4} = 230.$$

Hence,

$$\boxed{N = 230}.$$

Therefore,

$$\boxed{1\,\text{MSD} = \frac{1}{230}\,\text{cm}}$$

Question 2

A vernier callipers has 20 divisions on the vernier scale, which coincides with 19th division on the main scale. The least count of the instrument is 0.1 mm . One main scale division is equal to..... mm .

A. 1

B. 0.5

C. 2

D. 5

Correct answer: C

Source solution

Given,

$$20\,\text{VSD} = 19\,\text{MSD}.$$

Therefore,

$$1\,\text{VSD} = \frac{19}{20}\,\text{MSD}.$$

The least count of a vernier caliper is

$$\text{L.C.} = 1\,\text{MSD} - 1\,\text{VSD}.$$

Substituting,

$$0.1\,\text{mm} = 1\,\text{MSD} - \frac{19}{20}\,\text{MSD}.$$

$$0.1\,\text{mm} = \frac{1}{20}\,\text{MSD}.$$

Hence,

$$1\,\text{MSD} = 20 \times 0.1\,\text{mm} = 2\,\text{mm}.$$

$$\boxed{1\,\text{MSD} = 2\,\text{mm}}$$

Question 3

Match List-I with List-II.

List-I (Number)	List-II (Significant figures)
(a) 1001	(i) 4
(b) 010.1	(ii) 3
(c) 100.100	(iii) 6
(d) 0.0010010	(iv) 5

Choose the correct answer from the options given below:

A. (A)-(III), (B)-(IV), (C)-(II), (D)-(I)

B. (A)-(IV), (B)-(III), (C)-(I), (D)-(II)

C. (A)-(II), (B)-(I), (C)-(IV), (D)-(III)

D. (A)-(I), (B)-(II), (C)-(III), (D)-(IV)

Correct answer: C

Source solution

(a) 1001

All non-zero digits are significant and zeros between non-zero digits are also significant.

1001 has 4 significant figures

$(a) \rightarrow (i)$

\vspace{0.2cm}

(b) 010.1

The leading zero is not significant.

$$\mathbf{10.1}$$

contains $\mathbf{3}$ significant figures.

$$(b) \rightarrow (ii)$$

\vspace{0.2cm}

$$\mathbf{(c)}\ 100.100$$

Zeros between non-zero digits and trailing zeros to the right of the decimal point are significant.

$$\boxed{\mathbf{100.100 \text{ has } 6 \text{ significant figures}}}$$

$$(c) \rightarrow (iii)$$

\vspace{0.2cm}

$$\mathbf{(d)}\ 0.0010010$$

Leading zeros are not significant, while zeros between non-zero digits and the trailing zero after the decimal point are significant.

$$\boxed{\mathbf{0.0010010 \text{ has } 5 \text{ significant figures}}}$$

$$(d) \rightarrow (iv)$$

Therefore,

$$\boxed{(a) \rightarrow (i), \quad (b) \rightarrow (ii), \quad (c) \rightarrow (iii), \quad (d) \rightarrow (iv)}$$

Question 4

In an experiment to measure focal length (f) of convex lens, the least counts of the measuring scales for the position of object (u) and for the position of image (v) are Δu and Δv, respectively. The error in the measurement of the focal length of the convex lens will be :

A. $\frac{\Delta u}{u} + \frac{\Delta v}{v}$

B. $f^2\left[\frac{\Delta u}{u^2} + \frac{\Delta v}{v^2}\right]$

C. $2f\left[\frac{\Delta u}{u} + \frac{\Delta v}{v}\right]$

D. $f\left[\frac{\Delta u}{u} + \frac{\Delta v}{v}\right]$

Correct answer: B

Source solution

$$f^{-1} = v^{-1} - u^{-1}$$

$$-f^{-2}\,df = -v^{-2}\,dv - u^{-2}\,du$$

$$\frac{df}{f^2} = \frac{dv}{v^2} + \frac{du}{u^2}$$

$$df = f^2\left[\frac{dv}{v^2} + \frac{du}{u^2}\right]$$

Motion in a Straight Line

Questions 5-20 / 16 selected / 5.3% practice weight / Focus first

Question 5

A bullet of 10 g , moving with velocity v, collides head-on with the stationary bob of a pendulum and recoils with velocity $100\ \mathrm{m/s}$. The length of the pendulum is 0.5 m and mass of the bob is 1 kg . The minimum value of $v =$ $\mathrm{m/s}$ so that the pendulum describes a circle. (Assume the string to be inextensible and $g = 10\ \mathrm{m/s^2}$)

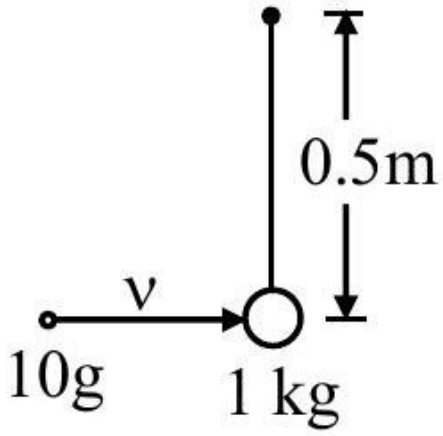

Numerical answer: _____

Enter the requested value (an integer; 0 decimal places). Use the units and scaling stated in the question.

Correct answer: 400

Source solution

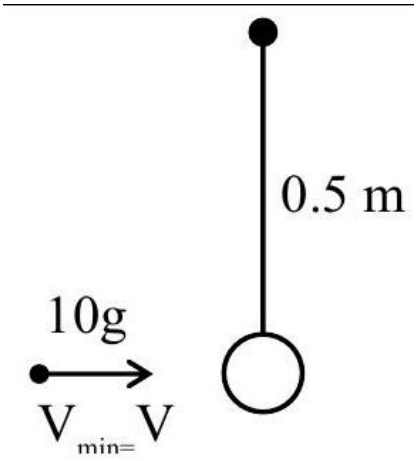

$V' = \sqrt{5gR} = \sqrt{5 \times 10 \times 0.5}$
$V' = 5\ m/s$
$m_1\ V = m_2 \times 5 - m_1 \times 100$
$\frac{10}{1000} \times V = 5 - \frac{10}{1000} \times 100$
$V = 400\ m/s$

Question 6

A ball of mass 0.5 kg is dropped from the height of 10 m . The height, at which the magnitude of velocity becomes equal to the magnitude of acceleration due to gravity, is m. (Use $g = 10\ m/s^2$).

Numerical answer: _____

Enter the requested value (an integer; 0 decimal places). Use the units and scaling stated in the question.

Correct answer: 5

Source solution

$v^2 = u^2 + 2as$
$100 = 0 + 2(10)s$
$S = 5\ m$
Height from ground $= 10 - 5 = 5\ m$

Question 7

An object is thrown vertically upwards. At its maximum height, which of the following quantity becomes zero ?

A. Momentum

B. Potential energy

C. Acceleration

D. Force

Correct answer: A

Source solution

Sol. At maximum height, $\mathbf{V} = 0 \therefore$ the momentum of the object is zero.

Question 8

A ball is thrown vertically upward with an initial velocity of $150\ \mathrm{m/s}$. The ratio of velocity after 3 s and 5 s is $\frac{x+1}{x}$. The value of x is ..... .Take ($\mathrm{g = 10\ m/s^2}$).

A. 6

B. 5

C. -5

D. 10

Correct answer: B

Source solution

Sol.

$$\vec{v} = \vec{u} + \vec{a}t$$

$$\mathrm{V} = 150 - 10t$$

$$\mathrm{V}(3) = 150 - 30 = 120$$

$$\mathrm{V}(5) = 150 - 50 = 100$$

$$\frac{120}{100} = \frac{x+1}{x} = \frac{6}{5} \Rightarrow x = 5$$

Question 9

A body is projected from the ground at an angle of 45° with the horizontal. Its velocity after 2 s is $20\ \mathrm{ms}^{-1}$. The maximum height reached by the body during its motion is m . (use $g = 10\ \mathrm{ms}^{-2}$)

Numerical answer: _____

Enter the requested value (an integer; 0 decimal places). Use the units and scaling stated in the question.

Correct answer: 20

Source solution

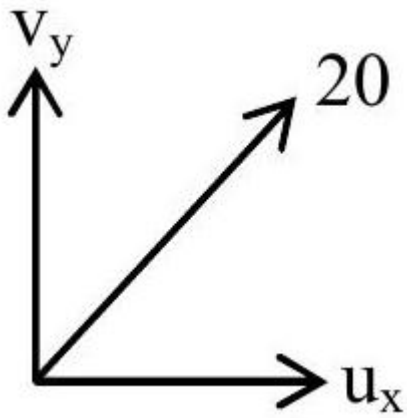

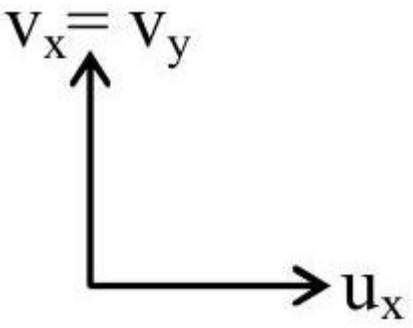

$$v_y = v_x - 20$$
$$\sqrt{(u_x - 20)^2 + u_x^2} = 20$$
$$\Rightarrow 2u_x^2 - 40u_x = 0$$
$$\therefore u_x = 20$$

Question 10

Two balls A and B are placed at the top of 180 m tall tower. Ball A is released from the top at $\mathbf{t = 0}$ s. Ball B is thrown vertically down with an initial velocity ' u ' at $t = 2$ s. After a certain time, both balls meet 100 m above the ground. Find the value of ' u ' in $\mathbf{ms^{-1}}$. [use $\mathbf{g = 10\ ms^{-2}}$] :

A. 10

B. 15

C. 20

D. 30

Correct answer: D

Source solution

Sol. Let them meet at time t.

$$t = \sqrt{\frac{2h}{g}} = \sqrt{\frac{2 \times 80}{10}} = 4\,\text{sec}$$

Time taken by ball B to meet A is $2\,\text{sec}$ using

$$S = ut + \frac{1}{2}at^2$$

$$-80 = -u \cdot 2 + \frac{1}{2}(-10)(2)^2$$

$$u = 30$$

Question 11

A pendulum is suspended by a string of length 250 cm . The mass of the bob of the pendulum is 200 g . The bob is pulled aside until the string is at 60° with vertical as shown in the figure. After releasing the bob. the maximum velocity attained by the bob will be ms^{-1}.
(if $\mathrm{g} = 10\ \mathrm{m/s^2}$)

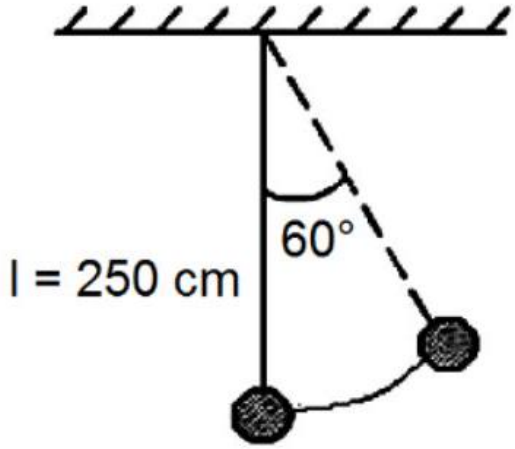

Numerical answer: _____

Enter the requested value (an integer; 0 decimal places). Use the units and scaling stated in the question.

Correct answer: 5

Source solution

$\mathrm{V_{max}} = \sqrt{2gh}$

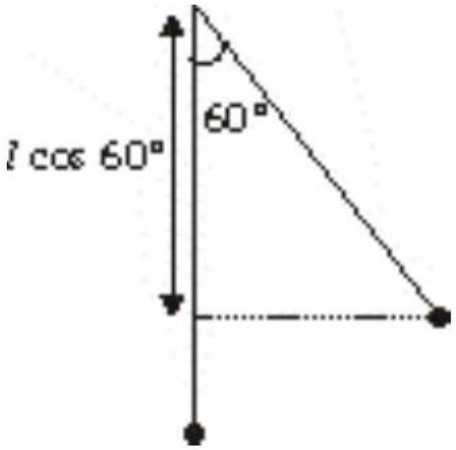

The speed will be highest at the lowest position.

$\mathrm{h} = (\ell - \ell\cos 60^\circ) = \frac{\ell}{2}$
$\mathrm{V_{max}} = \sqrt{2 \times \mathrm{g} \times \frac{\ell}{2}} = \sqrt{10 \times 2.5} = 5\ \mathrm{m/s}$

Question 12

A small toy starts moving from the position of rest under a constant acceleration. If it travels a distance of 10 m in t s ,. the distance travelled by the toy in the next t s will be :

A. 10 m

B. 20 m

C. 30 m

D. 40 m

Correct answer: C

Source solution

Sol. $\mathrm{u} = 0$, Say acceleration is a. For t s,

$$10 = \frac{1}{2}at^2$$

For $2t$ s,

$$10 + x = \frac{1}{2}a(2t)^2$$

$$\frac{10 + x}{10} = \frac{4}{1}$$
$$x = 30\,\mathrm{m}$$

Question 13

A body travels 102.5 m in $\mathbf{n^{th}}$ second and 115.0 m in $\mathbf{(n+2)^{th}}$ second. The acceleration is :

A. $9\ \mathrm{m/s^2}$

B. $6.25\ \mathrm{m/s^2}$

C. $12.5\ \mathrm{m/s^2}$

D. $5\ \mathrm{m/s^2}$

Correct answer: B

Source solution

$$102.5 = u + \frac{a}{2}(2n-1) \quad \text{and} \quad 115 = u + \frac{a}{2}(2n+3)$$

$$\Rightarrow 102.5 = u + an - \frac{a}{2}$$

$$115 = u + an + \frac{3a}{2}$$

Subtracting the first equation from the second gives:

$$12.5 = 2a \Rightarrow a = 6.25\,\mathrm{m/s^2}$$

Question 14

A body of mass M thrown horizontally with velocity v from the top of the tower of height H touches the ground at a distance of 100 m from the foot of the tower. A body of mass 2 M thrown at a velocity $\frac{v}{2}$ from the top of the tower of height 4 H will touch the ground at a distance of m.

Numerical answer: _____

Enter the requested value (an integer; 0 decimal places). Use the units and scaling stated in the question.

Correct answer: 100

Source solution

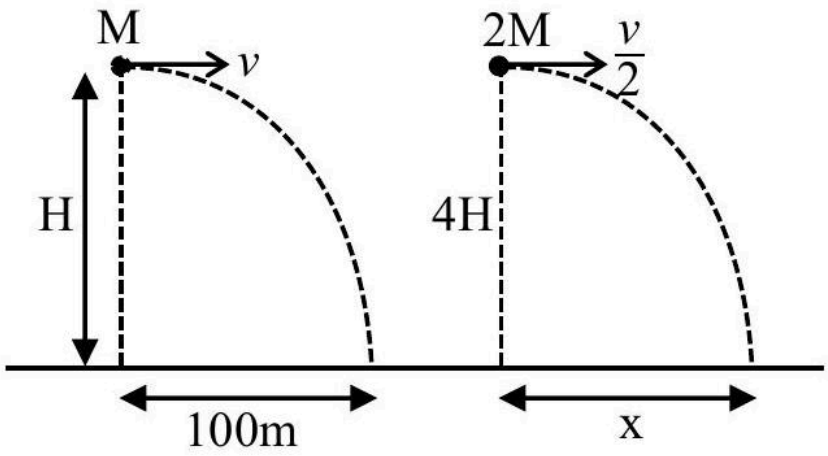

$100 = v\sqrt{\frac{2H}{g}}; \quad x = \frac{v}{2}\sqrt{\frac{2(4H)}{g}} = v\sqrt{\frac{2H}{g}}$

$\Rightarrow x = 100$

Question 15

A body is performing simple harmonic with an amplitude of 10 cm . The velocity of the body was tripled by air Jet when it is at 5 cm from its mean position. The new amplitude of vibration is $\sqrt{\mathbf{x}}$ cm . The value of x is .

Numerical answer: _____

Enter the requested value (an integer; 0 decimal places). Use the units and scaling stated in the question.

Correct answer: 700

Source solution

$\mathbf{A = 10\ cm}$

$\therefore$ Total Energy $= \frac{1}{2}\mathbf{KA^2}$

By energy conservation we can final v at $\mathbf{x = 5}$

$\frac{1}{2}K(10)^2 = \frac{1}{2}K(5)^2 + \frac{1}{2}mv^2$

$\mathbf{V = \sqrt{\frac{75\ K}{m}}}$

Now, velocity is tripled through external mean so the amplitude of SHM will charge and so the total energy, (but potential) energy at this moment will remain same)

$\therefore \frac{1}{2}\ \mathbf{K(5)^2} + \frac{1}{2}\ \mathbf{m}\left(3\sqrt{\frac{75\ K}{m}}\right)^2 = \frac{1}{2}\mathbf{KA^2}$

$\Rightarrow \mathbf{25\ K + 675\ K = KA^2}$

$\therefore \mathbf{A = \sqrt{700}}$

$\therefore \mathbf{x = 700}$

Question 16

A body is moving with constant speed, in a circle of radius 10 m . The body completes one revolution in 4 s . At the end of 3rd second, the displacement of body (in m) from its starting point is:

A. 15π

B. $10\sqrt{2}$

C. 30

D. 5π

Correct answer: B

Source solution

Angular speed is

$$\omega = \frac{2\pi}{T}$$

Given,

$$T = 4\,\mathrm{s}$$

$$\omega = \frac{2\pi}{4} = \frac{\pi}{2}\,\mathrm{rad\,s^{-1}}$$

Angular displacement after $t = 3\,\mathrm{s}$:

$$\theta = \omega t$$

$$= \frac{\pi}{2} \times 3$$

$$= \frac{3\pi}{2}\,\text{rad}$$

$$\boxed{\theta = \frac{3\pi}{2}\,\text{rad}}$$

Question 17

A child stands on the edge of the cliff 10 m above the ground and throws a stone horizontally with an initial speed of $5\ \mathrm{ms}^{-1}$. Neglecting the air resistance, the speed with which the stone hits the ground will be ..... ms^{-1} (given, $g = 10\ \mathrm{ms}^{-2}$).

A. 15

B. 20

C. 30

D. 25

Correct answer: A

Source solution

Along the vertical direction,

$$u_y = 0$$

Using

$$v_y^2 = u_y^2 + 2a_y S_y$$

$$v_y^2 = 0 + 2(10)(10)$$

$$v_y^2 = 200$$

$$v_y = 10\sqrt{2}\ \mathrm{m\ s^{-1}}$$

Given,

$$v_x = 5\ \mathrm{m\ s^{-1}}$$

Hence, the speed is

$$v = \sqrt{v_x^2 + v_y^2}$$

$$= \sqrt{5^2 + 200}$$

$$= \sqrt{225}$$

$$= 15 \text{ m s}^{-1}$$

Question 18

A body of mass 2 kg is initially at rest. It starts moving unidirectionally under the influence of a source of constant power P. Its displacement in 4 s is $\frac{1}{3}\alpha^2\sqrt{Pm}$. The value of α will be .

Numerical answer: _____

Enter the requested value (an integer; 0 decimal places). Use the units and scaling stated in the question.

Correct answer: 4

Source solution

$\frac{1}{2}mv^2 = pt$
$\mathrm{V} = \sqrt{\frac{2\mathrm{pt}}{\mathrm{m}}}$
$\frac{\mathrm{dx}}{\mathrm{dt}} = \sqrt{\frac{2\mathrm{pt}}{\mathrm{m}}}$
$\int \mathrm{dx} = \sqrt{\frac{2\mathrm{p}}{\mathrm{m}}} \int \sqrt{\mathrm{t}}\mathrm{dt}$
$\mathrm{x} = \sqrt{\frac{2\mathrm{p}}{\mathrm{m}}} \left[\mathrm{t}^{3/2}\right]_0^4$
$\mathrm{x} = \frac{1}{3} \times 16\sqrt{\mathrm{p}}$
$\propto = 4$
Ans: (4)

Question 19

A tennis ball is dropped on to the floor from a height of 9.8 m . It rebounds to a height 5.0 m . Ball comes in contact with the floor for 0.2 s . The average acceleration during contact is $\mathbf{ms}^{-2}$
(Given $\mathbf{g = 10\ ms^{-2}}$)

Numerical answer: _____

Enter the requested value (an integer; 0 decimal places). Use the units and scaling stated in the question.

Correct answer: 120

Source solution

($\mathbf{120 m/\ sec^2}$)

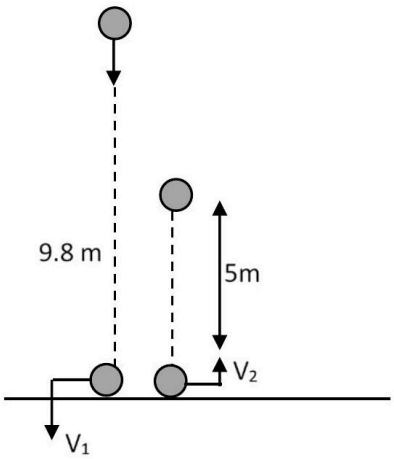

$v_1 = \sqrt{2gh} = \sqrt{2 \times 10 \times 9.8} = \sqrt{196}$
$\mathbf{v_1 = 14\ m/sec}$
$\mathbf{v_2 = \sqrt{2gh}}$
$\mathbf{v_2 = \sqrt{2 \times 10 \times 5} = 10\ m/sec.}$
$a_{\text{aug}} = \frac{\Delta v}{\Delta t} = \frac{\vec{v}_2 - \vec{v}_1}{\Delta t} = \frac{10-(-14)}{0.2}$
$a_{\text{ay}} = \frac{24}{0.2} = 120\ \text{m/sec}^2$

Question 20

The velocity time graph of a body moving in a straight line is shown in figure.The ratio of displacement to distance travelled by the body in time 0 to 10 s is :

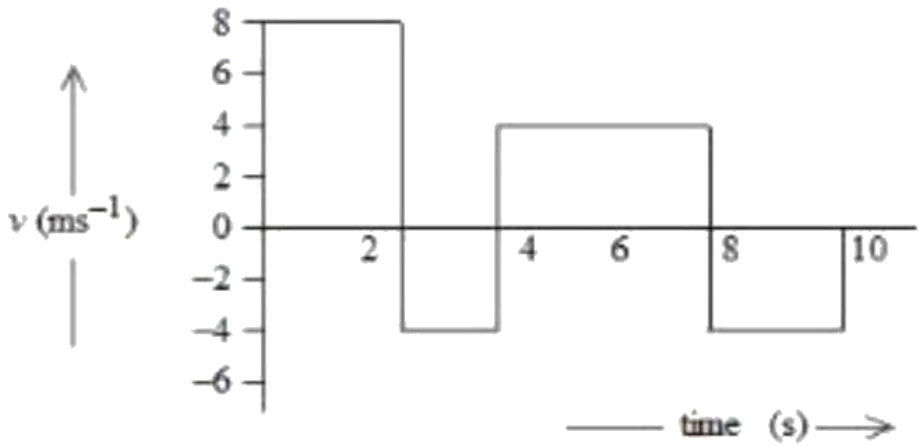

A. $1:1$

B. $1:2$

C. $1:3$

D. $1:4$

Correct answer: C

Source solution

Sol.

Displacement = algebraic area under the v-t graph

$$= (8 \times 2) + (-4 \times 2) + (4 \times 4) + (-4 \times 2)$$

$$= 16 - 8 + 16 - 8$$

$$= 16\,\text{m}$$

Distance travelled = sum of magnitudes of all areas

$$= (8 \times 2) + (4 \times 2) + (4 \times 4) + (4 \times 2)$$

$$= 16 + 8 + 16 + 8$$

$$= 48\,\mathrm{m}$$

Therefore,

$$\text{Displacement} : \text{Distance} = 16 : 48 = 1 : 3$$

$$\boxed{1 : 3}$$

Motion in a Plane

Question 21

A body is projected at $\mathbf{t = 0}$ with a velocity $\mathbf{10\ ms^{-1}}$ at an angle of $\mathbf{60^\circ}$ with the horizontal. The radius of curvature of its trajectory at $\mathbf{t = 1\ s}$ is R . Neglecting air resistance and taking acceleration due to gravity $\mathbf{g = 10\ ms^{-2}}$, the value of R is :

A. 2.5 m

B. 10.3 m

C. 2.8 m

D. 5.1 m

Correct answer: C

Source solution

Sol.

Initial velocity components:

$$v_x = 10\cos 60^\circ = 5\,\mathrm{m\ s^{-1}}$$

$$v_y = 10\sin 60^\circ = 5\sqrt{3}\,\mathrm{m\ s^{-1}}$$

After $t = 1\,\mathrm{s}$,

$$v_x = 5\,\mathrm{m\ s^{-1}}$$

$$v_y = 5\sqrt{3} - 10$$

$$|v_y| = 10 - 5\sqrt{3}$$

Hence,

$$v^2 = v_x^2 + v_y^2$$

$$= 25 + (10 - 5\sqrt{3})^2$$

$$= 25 + 100 + 75 - 100\sqrt{3}$$

$$= 200 - 100\sqrt{3}$$

Let θ be the angle made by the velocity with the horizontal.

$$\tan\theta = \frac{10 - 5\sqrt{3}}{5} = 2 - \sqrt{3}$$

$$\theta = 15^\circ$$

Normal acceleration:

$$a_n = g\cos\theta$$

$$= 10\cos 15^\circ$$

Using

$$a_n = \frac{v^2}{R}$$

$$R = \frac{v^2}{a_n} = \frac{200 - 100\sqrt{3}}{10\cos 15^\circ}$$

$$= \frac{100(2 - \sqrt{3})}{10\cos 15^\circ}$$

$$\boxed{R \approx 2.8\,\text{m}}$$

Question 22

A body of mass 100 g is moving in circular path of radius 2 m on vertical plane as shown in figure. The velocity of the body at point A is $\mathbf{10\ m/s}$. The ratio of its kinetic energies at point B and C is :(Take acceleration due to gravity as $\mathbf{10\ m/s^2}$)

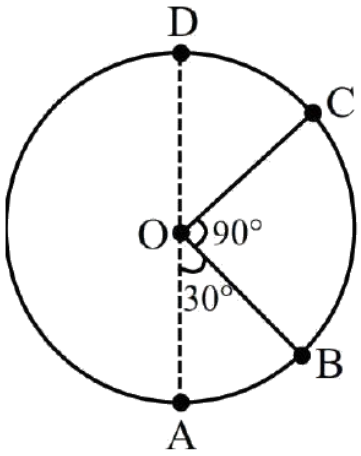

A. $\frac{2+\sqrt{3}}{3}$

B. $\frac{2+\sqrt{2}}{3}$

C. $\frac{3+\sqrt{3}}{2}$

D. $\frac{3-\sqrt{2}}{2}$

Correct answer: C

Source solution

$$\frac{1}{2}\mathrm{m} \times 100 + 0 = \frac{1}{2}\mathrm{m}V_{\mathrm{B}}^2 + \mathrm{mg}\left(R - \frac{R\sqrt{3}}{2}\right)$$

$$100 = V_{\mathrm{B}}^2 + 2gR\left(1 - \frac{\sqrt{3}}{2}\right)$$

$$V_{\mathrm{B}}^2 = 100 - 20\left(2 - \sqrt{3}\right)$$

$$V_{\mathrm{B}}^2 = 60 + 20\sqrt{3}$$

$$\mathrm{K \cdot E_B} = \frac{1}{2}\mathrm{m}V_\mathrm{B}^2 = \frac{\mathrm{m}}{2}\left(60 + 20\sqrt{3}\right)$$

$$\frac{1}{2}\mathrm{m}(100) = \frac{1}{2}\mathrm{m}V_\mathrm{C}^2 + \mathrm{mg}\left(\frac{3R}{2}\right)$$

$$100 = V_\mathrm{C}^2 + 60$$

$$V_\mathrm{C}^2 = 40$$

$$\mathrm{K \cdot E_C} = \frac{1}{2}\mathrm{m}V_\mathrm{C}^2 = \frac{1}{2}\mathrm{m}(40)$$

$$\mathrm{K \cdot E_B} = \frac{60 + 20\sqrt{3}}{40} = \frac{3}{2} + \frac{\sqrt{3}}{2} = \frac{3 + \sqrt{3}}{2}$$

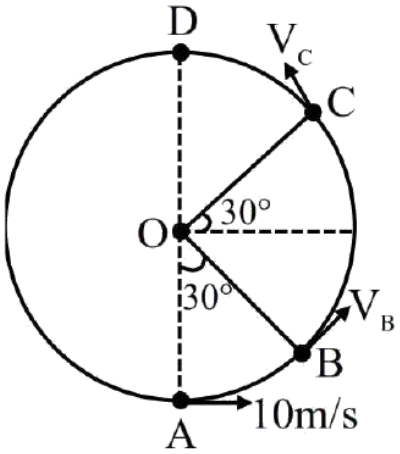

Question 23

A projectile is projected at 30° from horizontal with initial velocity $40\ \mathrm{ms}^{-1}$. The velocity of the projectile at $\mathrm{t} = 2\ \mathrm{s}$ from the start will be:(Given $\mathrm{g} = 10\ \mathrm{m/s}^2$)

A. $20\sqrt{3}\ \mathrm{ms}^{-1}$

B. $40\sqrt{3}\ \mathrm{ms}^{-1}$

C. $20\ \mathrm{ms}^{-1}$

D. Zero

Correct answer: A

Source solution

Sol.

Time to reach maximum height:

$$t_{\max} = \frac{u \sin\theta}{g}$$

$$= \frac{40 \sin 30^\circ}{10} = 2\,\mathrm{s}$$

Hence, at

$$t = 2\,\mathrm{s},$$

the particle is at the highest point of its trajectory.

At maximum height,

$$v_y = 0$$

and only the horizontal component remains:

$$v = v_x = u\cos\theta$$

$$= 40\cos 30^\circ$$

$$= 40 \cdot \frac{\sqrt{3}}{2}$$

$$= 20\sqrt{3}\,\mathrm{m\ s^{-1}}$$

Question 24

A man carrying a monkey on his shoulder does cycling smoothly on a circular track of radius 9 m and completes 120 revolutions in 3 minutes. The magnitude of centripetal acceleration of monkey is (in $\mathbf{m/s^2}$) :

A. zero

B. $16\pi^2\ \mathbf{ms^{-2}}$

C. $4\pi^2\ \mathbf{ms^{-2}}$

D. $57600\pi^2\ \mathbf{ms^{-2}}$

Correct answer: B

Source solution

Given,

$$R = 9\,\mathrm{m}$$

and

$$\mathbf{120 \text{ revolutions in } 3 \text{ min}}$$

Angular speed:

$$\omega = \frac{120 \times 2\pi}{3 \times 60}$$

$$= \frac{4\pi}{3}\ \mathrm{rad\ s^{-1}}$$

Centripetal acceleration is

$$a_c = \omega^2 R$$

$$= \left(\frac{4\pi}{3}\right)^2 \times 9$$

$$= \frac{16\pi^2}{9} \times 9$$

$$= 16\pi^2 \,\mathrm{m\,s^{-2}}$$

Question 25

A car is moving with a constant speed of $\mathbf{20\ m/s}$ in a circular horizontal track of radius 40 m . A bob is suspended from the roof of the car by a massless string. The angle made by the string with the vertical will be: (Take $\mathbf{g = 10\ m/s^2}$)

A. $\frac{\pi}{3}$

B. $\frac{\pi}{2}$

C. $\frac{\pi}{4}$

D. $\frac{\pi}{6}$

Correct answer: C

Source solution

Sol. 3

$$T\cos\theta = mg \tag{i}$$

$$T\sin\theta = \frac{mv^2}{R} \tag{ii}$$

$$\frac{\text{eq(i)}}{\text{eq(ii)}}; \frac{\cos\theta}{\sin\theta} = \frac{gR}{v^2}$$

$$\tan\theta = \frac{v^2}{Rg} = \frac{400}{40\times 10} = 1$$

$$\theta = \frac{\pi}{4}$$

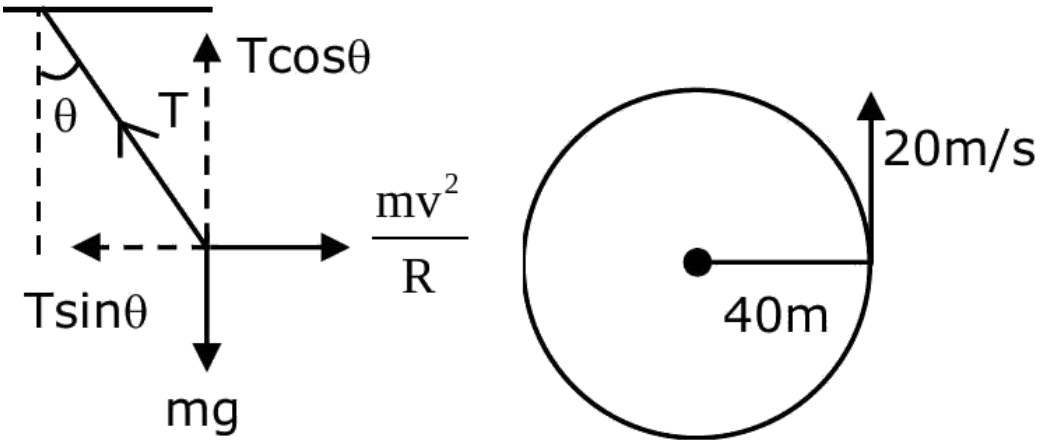

Question 26

The resultant of two vectors $\vec{A}$ and $\vec{B}$ is perpendicular to $\vec{A}$ and its magnitude is half that of $\vec{B}$. The angle between vectors $\vec{A}$ and $\vec{B}$ is

Numerical answer: _____

Enter the requested value (an integer; 0 decimal places). Use the units and scaling stated in the question.

Correct answer: 150

Source solution

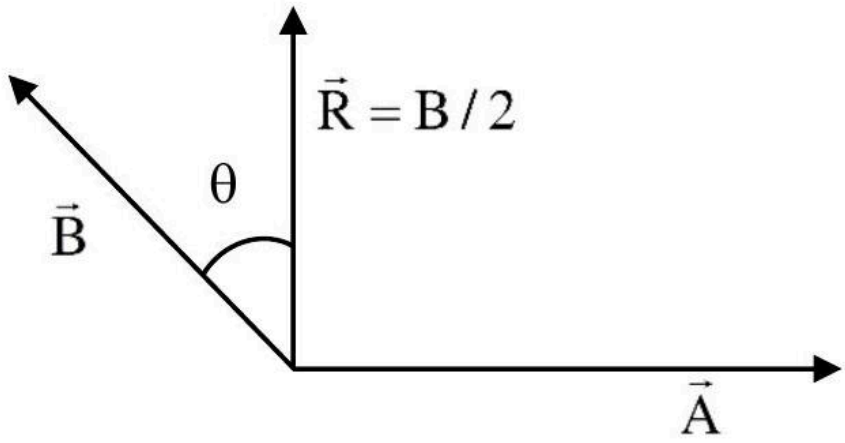

$\mathrm{B}\cos\theta = \frac{\mathrm{B}}{2}$
$\Rightarrow \theta = 60^\circ$
So, angle between $\vec{\mathrm{A}}$ & $\vec{\mathrm{B}}$ is $90^\circ + 60^\circ = 150^\circ$

Question 27

Magnitude of resultant of two vectors $\vec{P}$ and $\vec{Q}$ is equal to magnitude of $\vec{P}$. Find the angle between $\vec{Q}$ and resultant of $2\vec{P}$ and $\vec{Q}$.

Numerical answer: _____

Enter the requested value (an integer; 0 decimal places). Use the units and scaling stated in the question.

Correct answer: 90

Source solution

($90°$)

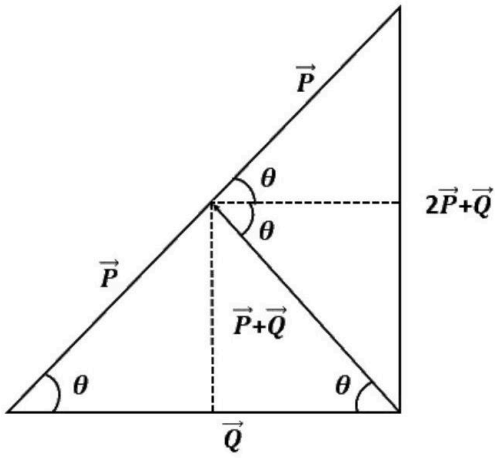

Laws of Motion

Question 28

Two blocks of mass 2 kg and 4 kg are connected by a metal wire going over a smooth pulley as shown in figure. The radius of wire is 4.0×10^{-5} m and Young's modulus of the metal is $2.0 \times 10^{11}\ \mathrm{N/m^2}$. The longitudinal strain developed in the wire is $\frac{1}{\alpha\pi}$. The value of α is . [Use $g = 10\ \mathrm{m/s^2}$)

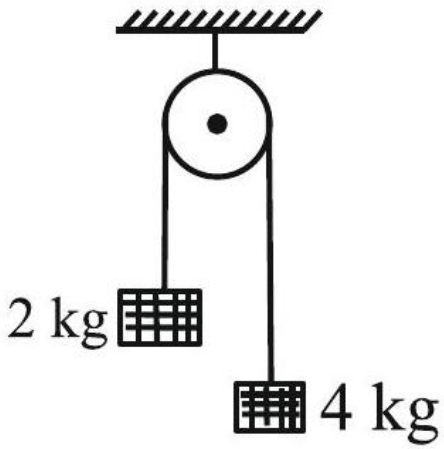

Numerical answer: _____

Enter the requested value (an integer; 0 decimal places). Use the units and scaling stated in the question.

Correct answer: 12

Source solution

$$T = \left(\frac{2m_1m_2}{m_1+m_2}\right)g = \frac{80}{3}\ \mathrm{N}$$
$$A = \pi r^2 = 16\pi \times 10^{-10}\ \mathrm{m^2}$$
$$\text{Strain} = \frac{\Delta\ell}{\ell} = \frac{F}{AY} = \frac{T}{AY}$$
$$= \frac{80/3}{16\pi\times10^{-10}\times2\times10^{11}} = \frac{1}{12\pi}$$
$$\alpha = 12$$

Question 29

A block starts moving up an inclined plane of inclination 30° with an initial velocity of v_0. It comes back to its initial position with velocity $\frac{v_0}{2}$. The value of the coefficient of kinetic friction between the block and the inclined plane is close to $\frac{I}{1000}$. The nearest integer to I is .

Numerical answer: _____

Enter the requested value (an integer; 0 decimal places). Use the units and scaling stated in the question.

Correct answer: 346

Source solution

346

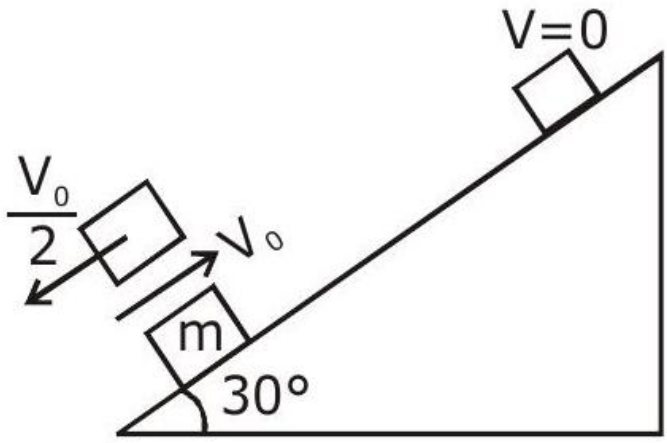

$$a = g\sin 30 + \mu g\cos 30$$
$$V_0^2 = 2ad$$
$$d = \frac{V_0^2}{2a}$$
$$W_f = k_f - k_i$$
$$-2\mu mg\cos 30\frac{V_0^2}{2a} = \frac{1}{2}m\frac{V_0^2}{4} - \frac{1}{2}mV_0^2$$
$$\frac{+2\mu g\cos 30}{a} = +\frac{3}{4}$$
$$8\mu g\cos 30 = 3g\sin 30 + 3\mu g\cos 30$$
$$5\mu g\cos 30 = 3g\sin 30$$
$$\mu = \frac{3\tan 30}{5} = \frac{\sqrt{3}}{5}$$
$$\frac{\sqrt{3}}{5} = \frac{I}{1000}$$
$$I = 346$$

Question 30

A bullet of mass 0.1 kg moving horizontally with speed $400\ \mathrm{ms}^{-1}$ hits a wooden block of mass 3.9 kg kept on a horizontal rough surface. The bullet gets embedded into the block and moves 20 m before coming to rest. The coefficient of friction between the block and the surface is ..... .(Given $\mathrm{g} = 10\ \mathrm{ms}^{2}$)

A. 0.50

B. 0.90

C. 0.65

D. 0.25

Correct answer: D

Source solution

Using conservation of momentum during collision:

$$P_i = P_f$$

$$(0.1)(400) = (0.1 + 3.9)v$$

$$40 = 4v$$

$$v = 10\,\mathrm{m/s}$$

After collision, the system moves with retardation due to friction:

$$a = \frac{\mu mg}{m} = \mu g$$

Using equation of motion:

$$v^2 = u^2 + 2as$$

Final velocity becomes zero after distance $s = 20\,\mathrm{m}$:

$$0 = (10)^2 - 2\mu g \cdot 20$$

$$100 = 40\mu g$$

Taking $g = 10\,\mathrm{m/s^2}$:

$$100 = 40\mu \cdot 10$$

$$100 = 400\mu$$

$$\boxed{\mu = \frac{1}{4}}$$

Question 31

A mass of 10 kg is suspended vertically by a rope of length 5 m from the roof. A force of 30 N is applied at the middle point of rope in horizontal direction. The angle made by upper half of the rope with vertical is $\theta = \tan^{-1}\left(x \times 10^{-1}\right)$. The value of x is .
(Given $g = 10\ m/s^2$)

Numerical answer: _____

Enter the requested value (an integer; 0 decimal places). Use the units and scaling stated in the question.

Correct answer: 3

Source solution

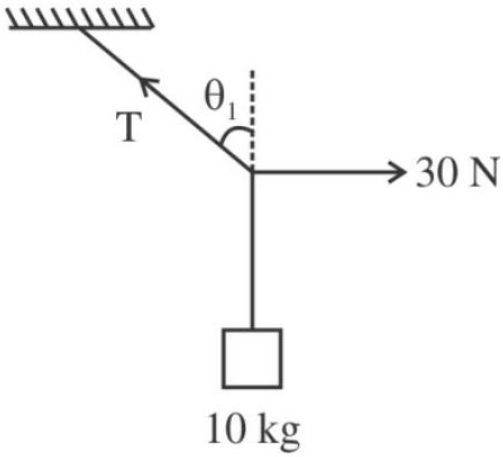

$T\sin\theta = 30$
$T\cos\theta = 100$
$\Rightarrow \quad \tan\theta = 0.3$

Question 32

A rectangular block of mass 5 kg attached to a horizontal spiral spring executes simple harmonic motion of amplitude 1 m and time period 3.14 s . The maximum force exerted by spring on block is N.

Numerical answer: _____

Enter the requested value (an integer; 0 decimal places). Use the units and scaling stated in the question.

Correct answer: 20

Source solution

$$\therefore \mathrm{T}=3.14=\pi$$

$$\begin{aligned}
\mathrm{T}=\pi=\frac{2\pi}{\omega} &\Rightarrow \omega=2 \\
\mathrm{F_{max}} &= \mathrm{ma_{max}} \\
&= \mathrm{m}\left(\mathrm{A}\omega^2\right) \\
&= \mathrm{mA}(2)^2 \\
&= 5\times 1\times 4 \\
&= 20\ \mathrm{N}
\end{aligned}$$

Question 33

A force acts for 20 s on a body of mass 20 kg , starting from rest, after which the force ceases and then body describes 50 m in the next 10 s . The value of force will be:

A. 40 N

B. 5 N

C. 20 N

D. 10 N

Correct answer: B

Source solution

Sol. (2)

$$50 = V \times 10$$
$$V = 5\,m/s$$
$$V = 0 + a \times 20$$
$$5 = a \times 20$$
$$a = \frac{1}{4}\,m/s^2$$
$$F = ma = 20 \times \frac{1}{4} = 5\,N$$

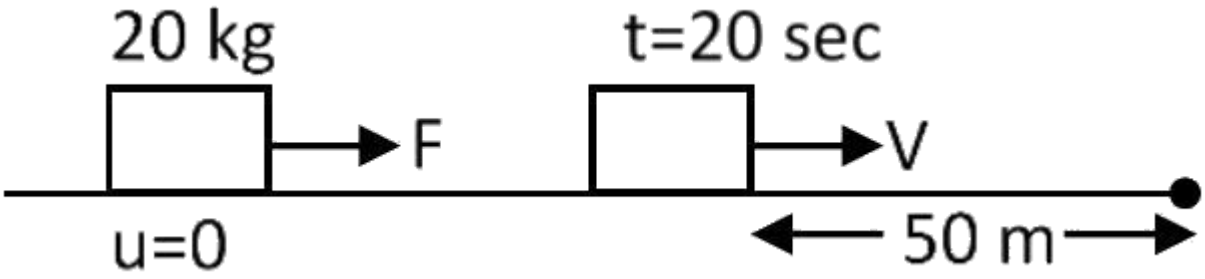

Question 34

A block is fastened to a horizontal spring. The block is pulled to a distance $x = 10\ \text{cm}$ from its equilibrium position (at $x = 0$) on a frictionless surface from rest. The energy of the block at $x = 5\ \text{cm}$ is 0.25 J. The spring constant of the spring is Nm^{-1}

Numerical answer: _____

Enter the requested value (an integer; 0 decimal places). Use the units and scaling stated in the question.

Correct answer: 50

Source solution

(50)
Given

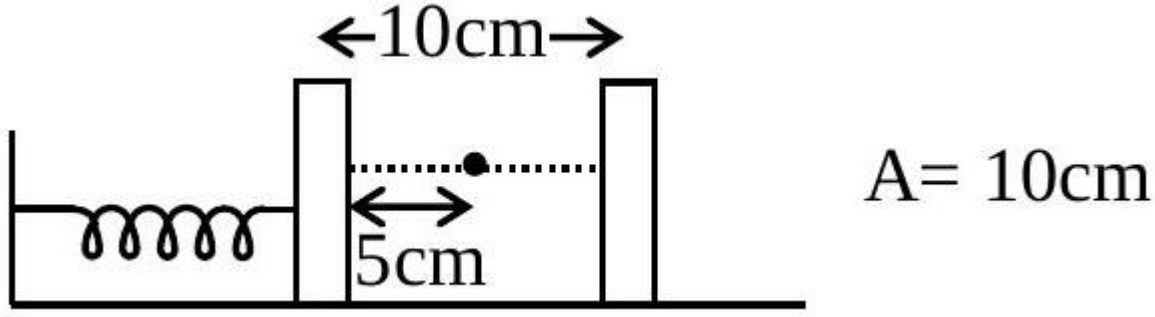

At any instant total energy for free oscillation remains constant $= \frac{1}{2}kA^2$

$\Rightarrow \frac{1}{2}kA^2 = 0.25\ \text{J}$

$\Rightarrow \frac{1}{2}kA^2 = 0.25\ \text{J} \Rightarrow K = \frac{0.25\times 2}{A^2}$

$\Rightarrow k = \frac{0.50}{(10\ \text{cm})^2} = \frac{0.50}{(10\times 10^{-2})} = \frac{0.50\times 10^4}{100}$

$k = 0.50 \times 100 = 50\ \text{N/m}$

Question 35

A uniform disc with mass $M = 4\ \mathrm{kg}$ and radius $R = 10$ cm is mounted on a fixed horizontal axle as shown in figure. A block with mass $\mathrm{m} = 2\ \mathrm{kg}$ hangs from a massless cord that is wrapped around the rim of the disc. During the fall of the block, the cord does not slip and there is no friction at the axle. The tension in the cord is N.

(Take $\mathrm{g} = 10\ \mathrm{ms}^{-2}$)

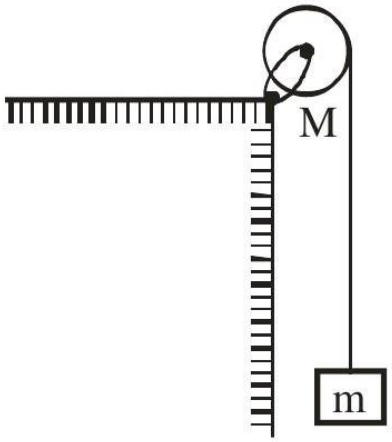

Numerical answer: _____

Enter the requested value (an integer; 0 decimal places). Use the units and scaling stated in the question.

Correct answer: 10

Source solution

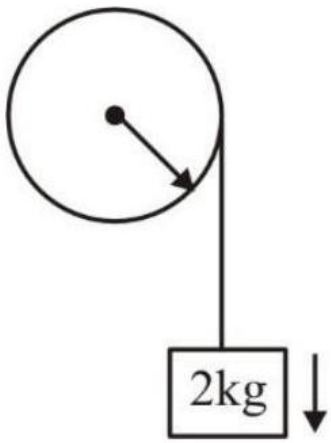

$$2\,\mathrm{g} - \mathrm{T} = 2\mathrm{a} \tag{1}$$

$$\mathrm{TR} = \frac{\mathrm{MR}^2}{2}\alpha \tag{2}$$

$$\alpha = \frac{a}{R} \tag{3}$$

$\mathrm{T} = 2\mathrm{a}$
$2\,\mathrm{g} - \mathrm{T} = 2\mathrm{a}$
$\mathrm{T} = \mathrm{g} = 10\ \mathrm{N}$

Question 36

A metal block of mass m is suspended from a rigid support through a metal wire of diameter 14 mm . The tensile stress developed in the wire under equilibrium state is $7 \times 10^5 \mathrm{Nm}^{-2}$. The value of mass m is kg.

(Take, $\mathrm{g} = 9.8\ \mathrm{ms}^{-2}$ and $\pi = \frac{22}{7}$)

Numerical answer: _____

Enter the requested value (an integer; 0 decimal places). Use the units and scaling stated in the question.

Correct answer: 11

Source solution

Tensile stress, $\sigma = \frac{F}{A} = \frac{4mg}{\pi D^2}$

$$\therefore m = \frac{\pi D^2 \sigma}{4g}$$
$$= \frac{22}{7} \times \frac{\left(14 \times 10^{-3}\right)^2 \times 7 \times 10^5}{4 \times 9.8}$$
$$= 11\ \mathrm{kg}$$

Question 37

Each of three blocks $\mathbf{P, Q}$ and R shown in figure has a mass of 3 kg . Each of the wire A and B has cross-sectional area $0.005\ \mathbf{cm^2}$ and Young's modulus $2 \times 10^{11}\ \mathbf{N\ m^{-2}}$. Neglecting friction, the longitudinal strain on wire B is $\quad \times 10^{-4}$. (Take $\mathbf{g = 10\ m/s^2}$)

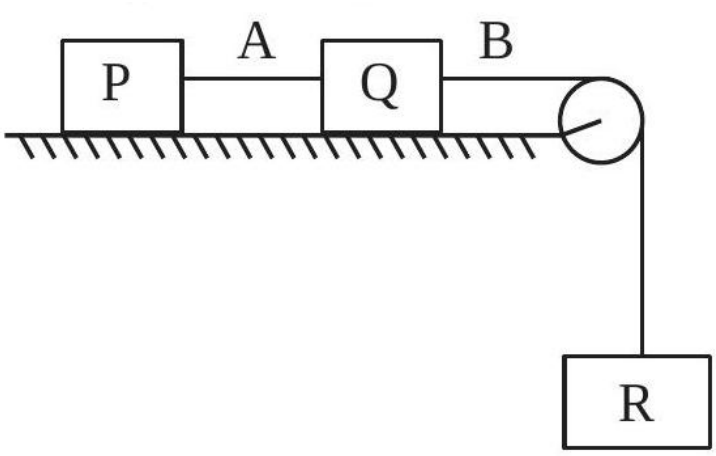

Numerical answer: _____

Enter the requested value (an integer; 0 decimal places). Use the units and scaling stated in the question.

Correct answer: 2

Source solution

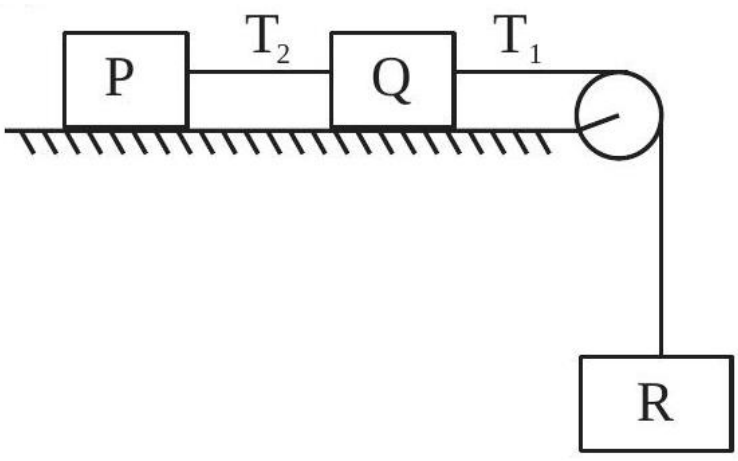

$a = \frac{10}{3}\ \mathbf{m/s^2}$
$30 - T_1 = 3 \times a$
$T_1 = 20\ \mathbf{N}$

$$\text{strain} = \frac{\text{stress}}{Y}$$
$$= 2 \times 10^{-4}$$

Work, Energy and Power

Questions 38-54 / 17 selected / 5.7% practice weight / Focus first

Question 38

A body at rest is moved along a horizontal straight line by a machine delivering a constant power. The distance moved by the body in time 't' is proportional to :

A. $t^{\frac{3}{2}}$

B. $t^{\frac{1}{2}}$

C. $t^{\frac{1}{4}}$

D. $t^{\frac{3}{4}}$

Correct answer: A

Source solution

$P = \text{constant}$

$$\frac{1}{2}mv^2 = Pt$$
$$\Rightarrow v \propto \sqrt{t}$$
$$\frac{dx}{dt} = C\sqrt{t} \quad C = \text{ constant by integration}$$
$$x = C\frac{t^{\frac{1}{2}+1}}{\frac{1}{2}+1}$$

$x \propto t^{3/2}$

Question 39

The bob of a pendulum was released from a horizontal position. The length of the pendulum is 10 m . If it dissipates 10% of its initial energy against air resistance, the speed with which the bob arrives at the lowest point is : [Use, $\mathbf{g : 10\ ms^{-2}}$]

A. $6\sqrt{5}\ \mathrm{ms}^{-1}$

B. $5\sqrt{6}\ \mathrm{ms}^{-1}$

C. $5\sqrt{5}\ \mathrm{ms}^{-1}$

D. $2\sqrt{5}\ \mathrm{ms}^{-1}$

Correct answer: A

Source solution

Sol.

Length of the pendulum,

$$\ell = 10\,\mathrm{m}$$

Initial potential energy (taking the lowest point as reference) is

$$E_i = mg\ell$$

Given that 10% of the energy is lost, the remaining energy is

$$E_f = \frac{9}{10}mg\ell$$

At the lowest point, this energy becomes kinetic energy:

$$\frac{9}{10}mg\ell = \frac{1}{2}mv^2$$

Substituting

$$\ell = 10\,\mathrm{m}, \qquad g = 10\,\mathrm{m/s^2},$$

$$\frac{9}{10} \times m \times 10 \times 10 = \frac{1}{2}mv^2$$

$$90m = \frac{1}{2}mv^2$$

$$v^2 = 180$$

$$v = \sqrt{180}$$

$$\boxed{v = 6\sqrt{5}\,\mathrm{m/s}}$$

Question 40

A block of mass ' m ' (as shown in figure) moving with kinetic energy E compresses a spring through a distance 25 cm when, its speed is halved. The value of spring constant of used spring will be $\mathbf{nENm^{-1}}$ for $\mathbf{n} =$.

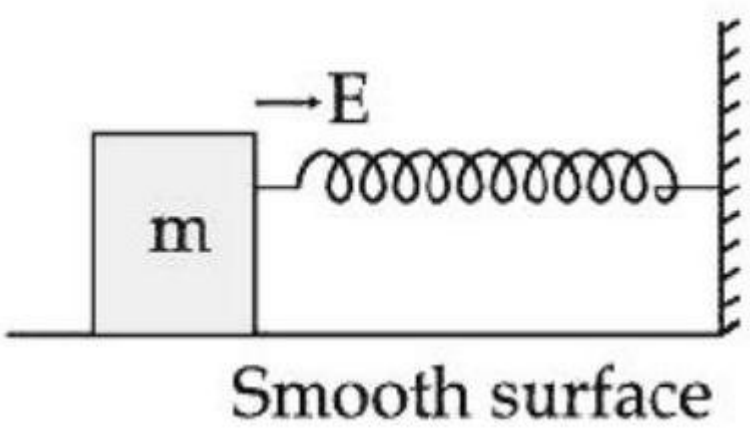

Numerical answer: _____

Enter the requested value (an integer; 0 decimal places). Use the units and scaling stated in the question.

Correct answer: 24

Source solution

Using work - energy theorem

$\mathbf{W_{net}} = (\mathbf{K_f} - \mathbf{K_i})$

$\Rightarrow -\frac{1}{2}Kx^2 = \frac{1}{2}m\left(\frac{v}{2}\right)^2 - \frac{1}{2}mv^2 = \frac{E}{4} - E$

$\Rightarrow \frac{1}{2}\mathbf{Kx^2} = \frac{\mathbf{3E}}{4} \Rightarrow \mathbf{K} = \frac{\mathbf{3E}}{\mathbf{2x^2}}$

$\Rightarrow \mathbf{K} = \frac{\mathbf{3E}}{\mathbf{2\times\left(\frac{1}{4}\right)^2}} = \mathbf{24E}$

$\mathbf{n = 24}$

Question 41

A body of mass 2 kg is driven by an engine delivering a constant power of $1\ \mathrm{J/s}$. The body starts from rest and moves in a straight line. After 9 seconds, the body has moved a distance (in m)

.

Numerical answer: _____

Enter the requested value (an integer; 0 decimal places). Use the units and scaling stated in the question.

Correct answer: 18

Source solution

18

P = Fv = mav

$\mathrm{a}=\frac{\mathrm{p}}{\mathrm{mv}}$

$\frac{dv}{dt}=\frac{p}{mv}$

$\int_0^u vdv=\frac{p}{m}\int_0^t dt$

$\frac{\mathrm{u}^2}{2}=\frac{\mathrm{p}}{\mathrm{m}}\mathrm{t}$

$u=\sqrt{\frac{2p}{m}}\sqrt{t}$

$\frac{\mathrm{dx}}{\mathrm{dt}}=\sqrt{\frac{\varphi}{\mathrm{m}}}\sqrt{\mathrm{t}}$

$\int_0^{\mathrm{x}}\mathrm{dx}=\sqrt{\frac{2\mathrm{p}}{\mathrm{m}}}\int_0^9\sqrt{\mathrm{t}}\mathrm{dt}$

$x=\frac{2}{3}\left[(9)^{1/2}\right]^3$

$=\frac{2}{3}\times 27$

$\mathrm{x}=18$

II-method

$\mathrm{Pt}=\mathrm{w}=\frac{1}{2}\mathrm{mv}^2-0$

$1\times t=\frac{1}{2}\times 2\times u^2$

$\mathrm{u}=\sqrt{\mathrm{t}}$

$\frac{\mathrm{dx}}{\mathrm{dt}}=\sqrt{\mathrm{t}}=\int_0^1\mathrm{dx}=\int_0^9\sqrt{\mathrm{t}}\mathrm{dt}$

$x=\frac{\left[t^{3/2}\right]_0^9}{\frac{3}{2}}=18\ \mathrm{m}$

Question 42

An object of mass 0.2 kg executes simple harmonic motion along x axis with frequency of $\left(\frac{25}{\pi}\right)$ Hz. At the position $x = 0.04\ \mathrm{m}$ the object has kinetic energy 0.5 J and potential energy 0.4 J . The amplitude of oscillation is cm.

Numerical answer: _____

Enter the requested value (an integer; 0 decimal places). Use the units and scaling stated in the question.

Correct answer: 6

Source solution

Total energy = K.E. + P.E.

at $\mathrm{x} = 0.04\ \mathrm{m}$, T.E. $= 0.5 + 0.4 = 0.9\ \mathrm{J}$

T. $\mathrm{E} = 1\ \mathrm{m}^2\ \mathrm{A}^2 = 0.9$

$$= \frac{1}{2} \times 0.2\left(2\pi \times \frac{25}{\pi}\right)^2 \times \mathrm{A}^2 = 0.9$$

$\Rightarrow \mathrm{A} = 0.06\ \mathrm{m}$

$\mathrm{A} = 6\ \mathrm{cm}$

Question 43

In the given figure, the block of mass m is dropped from the point 'A'. The expression for kinetic energy of block when it reaches point ' B ' is :

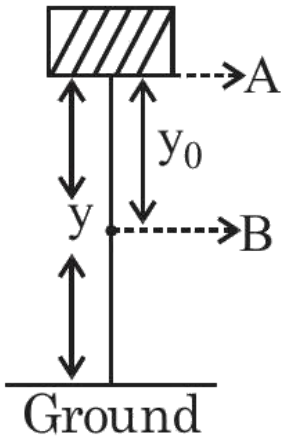

A. $\frac{1}{2}mgy_0^2$

B. $\frac{1}{2}mgy^2$

C. $mg(y-y_0)$

D. mgy_0

Correct answer: D

Source solution

$$\text{Work done by gravity} = K_B - K_A$$

$$mgy_0 = K_B - 0$$

$$K_B = mgy_0$$

Question 44

A block of mass 40 kg slides over a surface, when a mass of 4 kg is suspended through an inextensible massless string passing over frictionless pulley as shown below. The coefficient of kinetic friction between the surface and block is 0.02 . The acceleration of block is. (Given $\mathbf{g = 10\ ms^{-2}}$.)

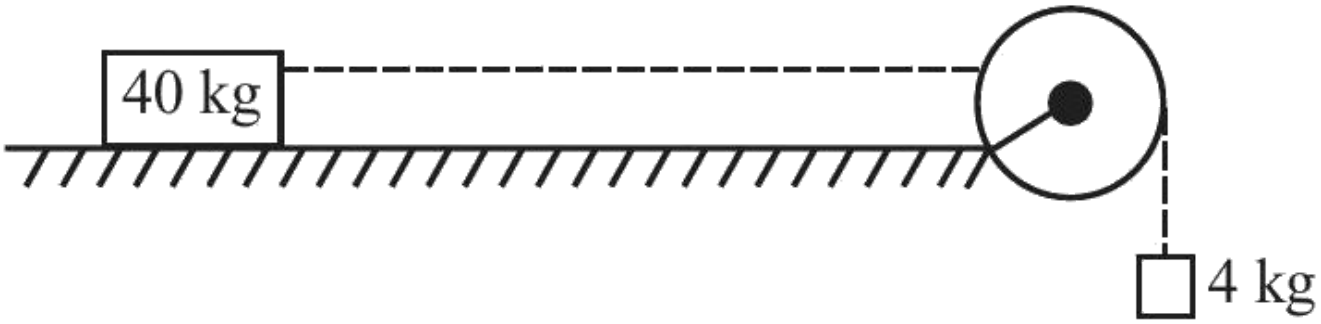

A. $1\ \mathrm{ms}^{-2}$

B. $1/5\ \mathrm{ms}^{-2}$

C. $4/5\ \mathrm{ms}^{-2}$

D. $8/11\ \mathrm{ms}^{-2}$

Correct answer: D

Source solution

$$\text{For } 4\,\text{kg block: } 4\,\text{g} - T = 4a$$

$$\text{For } 40\,\text{kg block: } T - 40\,\text{g} \cdot 0.02 = 40a$$

$$\text{Adding both equations: } 40 - 8 = 44a$$

$$a = \frac{32}{44} = \frac{8}{11}\ \text{m/s}^2$$

Question 45

A player caught a cricket ball of mass 150 g moving at a speed of $20\ \mathrm{m/s}$. If the catching process is completed in 0.1 s , the magnitude of force exerted by the ball on the hand of the player is:

A. 150 N

B. 3 N

C. 30 N

D. 300 N

Correct answer: C

Source solution

Sol.

Average force is given by the rate of change of momentum:

$$F = \frac{\Delta p}{\Delta t}$$

Given,

$$m = 150\,\mathrm{g} = 150 \times 10^{-3}\,\mathrm{kg}$$

$$u = 0, \qquad v = 20\,\mathrm{m\,s^{-1}}$$

$$\Delta t = 0.1\,\mathrm{s}$$

Therefore,

$$F = \frac{m(v-u)}{\Delta t}$$

$$= \frac{150 \times 10^{-3} \times 20}{0.1}$$

$$= \frac{3}{0.1}$$

$$= 30\,\mathrm{N}$$

Question 46

A wooden block of mass 5 kg rests on soft horizontal floor. When an iron cylinder of mass 25 kg is placed on the top of the block, the floor yields and the block and the cylinder together go downwith an acceleration of $0.1\ \mathrm{ms}^{-2}$. The action force of the system on the floor is equal to:

A. 297 N

B. 294 N

C. 291 N

D. 196 N

Correct answer: C

Source solution

Sol.

Taking

$$g = 9.8\,\mathrm{m\,s^{-2}},$$

the weight of a $30\,\mathrm{kg}$ body is

$$W = mg$$

$$W = 30 \times 9.8$$

$$W = 294\,\mathrm{N}$$

If g is approximated as

$$g = 10\,\mathrm{m\,s^{-2}},$$

then

$$W = 30 \times 10$$

$$W = 300\,\mathrm{N}$$

The more accurate value is

$$\boxed{294\,\mathrm{N}}$$

Question 47

A body of mass 50 kg is lifted to a height of 20 m from the ground in the two different ways as shown in the figures. The ratio of work done against the gravity in both the respective cases, will be:Case-2: Along the ramp

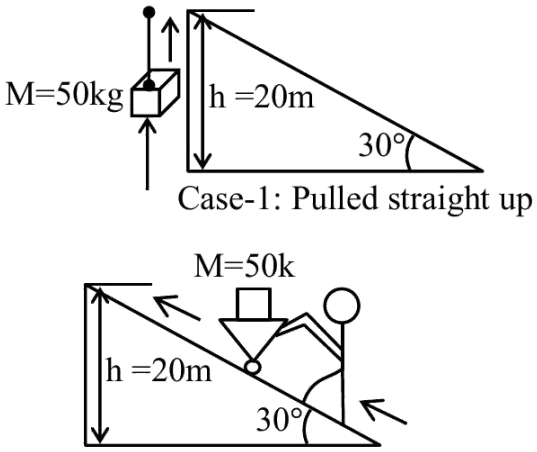

A. $1:1$

B. $2:1$

C. $\sqrt{3}:2$

D. $1:2$

Correct answer: A

Source solution

Sol.

In both cases, the body of mass $m = 50\,\text{kg}$ is raised through the same vertical height

$$h = 20\,\text{m}.$$

The work done against gravity depends only on the change in height:

$$W = mgh$$

For Case 1 (lifted vertically),

$$W_1 = mgh$$

$$W_1 = 50 \times 10 \times 20$$

$$W_1 = 10000\,\text{J}$$

For Case 2 (moved along the 30° incline),

Length of incline:

$$s = \frac{h}{\sin 30^\circ} = \frac{20}{1/2} = 40\,\text{m}$$

Force required along the incline:

$$F = mg\sin 30^\circ$$

$$F = 50 \times 10 \times \frac{1}{2} = 250\,\text{N}$$

Work done:

$$W_2 = Fs$$

$$W_2 = 250 \times 40$$

$$W_2 = 10000\,\text{J}$$

Thus,

$$W_1 = W_2 = mgh$$

Hence, the ratio of work done against gravity is

$$\boxed{W_1 : W_2 = 1 : 1}$$

Question 48

A wooden block, initially at rest on the ground, is pushed by a force which increases linearly with time t. Which of the following curve best describes acceleration of the block with time :

A.

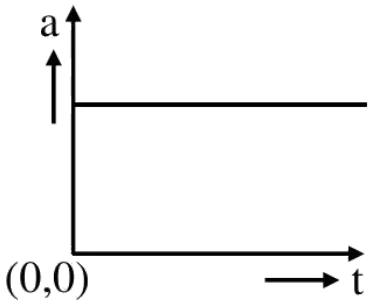

B.

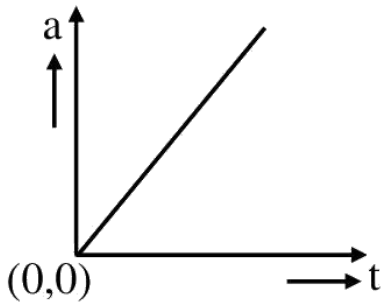

C.

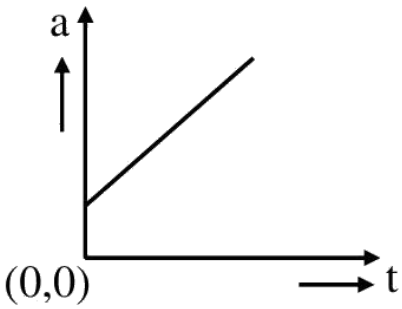

D.

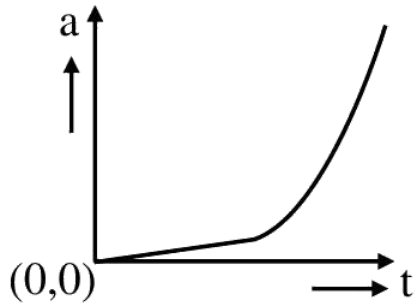

Correct answer: B

Source solution

Sol.

Given that the applied force varies with time as

$$F = kt$$

where k is a constant.

Using Newton's second law,

$$F = ma$$

$$a = \frac{F}{m}$$

Substituting $F = kt$,

$$a = \frac{kt}{m}$$

Thus,

$$a \propto t$$

which is the equation of a straight line passing through the origin in the a-vs-t graph.

Hence, the correct graph is a straight line with positive slope passing through the origin.

Option (2)

Question 49

A block of mass 5 kg is placed at rest on a table of rough surface. Now, if a force of 30 N is applied in the direction parallel to surface of the table, the block slides through a distance of 50 m in an interval of time 10 s . Coefficient of kinetic friction is (given, $\mathbf{g = 10\ ms^{-2}}$):

A. 0.60

B. 0.25

C. 0.75

D. 0.50

Correct answer: D

Source solution

Sol. (D)

$$\mathrm{S = ut + \frac{1}{2}at^2}$$

$$50 = 0 \cdot t + \frac{1}{2} \cdot a \cdot (10)^2$$

$$50 = \frac{1}{2} \cdot a \cdot 100$$

$$a = \frac{100}{100} \Rightarrow a = 1\,\mathrm{m/s^2}$$

$$\sum \mathrm{F_x = ma_x}$$

$$30 - \mu \mathrm{mg = ma}$$

$$30 - \mu \cdot 50 = 5$$

$$50\mu = 25$$

$$\mu = \frac{25}{50} = \frac{1}{2} \Rightarrow \mu = 0.5$$

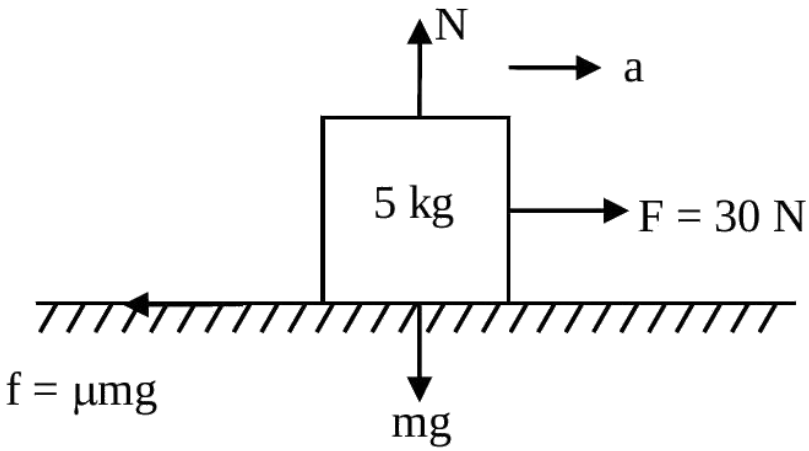

Question 50

A spherical body of mass 2 kg starting from rest acquires a kinetic energy of 10000 J at the end of 5th second. The force acted on the body is N.

Numerical answer: _____

Enter the requested value (an integer; 0 decimal places). Use the units and scaling stated in the question.

Correct answer: 40

Source solution

40

Impulse $= \Delta P$

$F\Delta T = P - O \Rightarrow F\Delta T = \sqrt{2mk}$

$F(5) = \sqrt{2 \times 2 \times 10000}$

$F = 40\ N$

Question 51

A body of mass 10 kg is moving with an initial speed of $\mathbf{20\ m/s}$. The body stops after 5 s due to friction between body and the floor. The value of the coefficient of friction is: (Take acceleration due to gravity $g = 10\ \mathbf{ms^{-2}}$)

A. 0.3

B. 0.5

C. 0.2

D. 0.4

Correct answer: D

Source solution

Sol.

Using the first equation of motion,

$$v = u + at$$

Given,

$$u = 20\,\mathrm{m\,s^{-1}}, \qquad v = 0, \qquad t = 5\,\mathrm{s}$$

The retardation due to friction is

$$a = -\mu g$$

Substituting,

$$0 = 20 - \mu g(5)$$

Taking

$$g = 10\,\mathrm{m\,s^{-2}},$$

$$0 = 20 - 50\mu$$

$$50\mu = 20$$

$$\mu = \frac{20}{50}$$

$$\mu = \frac{2}{5}$$

$$\boxed{\mu = 0.4}$$

Question 52

As shown in the figure a block of mass 10 kg lying on a horizontal surface is pulled by a force F acting at an angle $30°$, with horizontal. For $\mu_s = 0.25$, the block will just start to move for the value of F : [Given $g = 10\ ms^{-2}$]

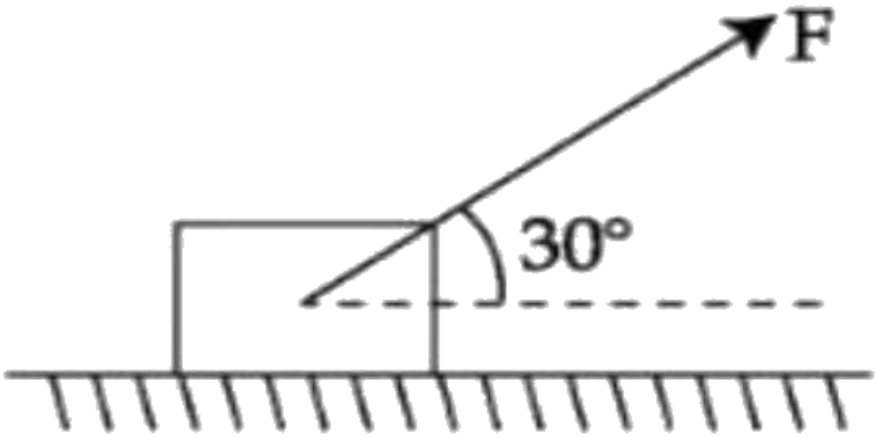

A. 20 N

B. 33.3 N

C. 25.2 N

D. 35.7 N

Correct answer: C

Source solution

Sol.

Given,

$$m = 10\,\text{kg}, \qquad \mu_s = 0.25, \qquad \theta = 30°, \qquad g = 10\,\text{m s}^{-2}$$

For limiting equilibrium,

$$f = \mu_s N$$

Resolving forces horizontally,

$$F\cos 30^\circ = f$$

$$F\cos 30^\circ = \mu_s N$$

Resolving forces vertically,

$$N + F\sin 30^\circ = mg$$

$$N = mg - F\sin 30^\circ$$

Substituting for N,

$$F\cos 30^\circ = \mu_s\left(mg - F\sin 30^\circ\right)$$

$$F\cos 30^\circ = \mu_s mg - \mu_s F\sin 30^\circ$$

$$F\left(\cos 30^\circ + \mu_s \sin 30^\circ\right) = \mu_s mg$$

$$F = \frac{\mu_s mg}{\cos 30^\circ + \mu_s \sin 30^\circ}$$

Substituting the values,

$$F = \frac{0.25 \times 10 \times 10}{\frac{\sqrt{3}}{2} + 0.25 \times \frac{1}{2}}$$

$$= \frac{25}{\frac{\sqrt{3}}{2} + \frac{1}{8}}$$

$$= \frac{50}{\sqrt{3} + 0.25}$$

$$\approx \frac{50}{1.73 + 0.25}$$

$$= \frac{50}{1.98}$$

$$\boxed{F \approx 25.2\,\text{N}}$$

Question 53

A bi convex lens of focal length 10 cm is cut in two identical parts along a plane perpendicular to the principal axis. The power of each lens after cut is D.

Numerical answer: _____

Enter the requested value (an integer; 0 decimal places). Use the units and scaling stated in the question.

Correct answer: 5

Source solution



Let power of each part is $\mathbf{P_1}$, then

$\mathbf{P_1 + P_1 = P = \frac{1}{f}}$

$\mathbf{2P_1 = \frac{1}{0.1} = 10}$

$\mathbf{P_1 = 5D}$

Question 54

The radius of curvature of each surface of a convex lens having refractive index 1.8 is 20 cm . The lens is now immersed in a liquid of refractive index 1.5. The ratio of power of lens in air to its power in the liquid will be $x : 1$. The value of x is .

Numerical answer: _____

Enter the requested value (an integer; 0 decimal places). Use the units and scaling stated in the question.

Correct answer: 4

Source solution

$P = (1.8 - 1)\left(\frac{1}{20} + \frac{1}{20}\right)$ by lens maker's formula $P' = \left(\frac{1.8}{1.5} - 1\right)\left(\frac{1}{20} + \frac{1}{20}\right)$

Dividing $\frac{P}{P'} = \frac{0.8}{1.2-1} = 4$

System of Particles and Rotational Motion

Question 55

A bob of mass ' m ' is suspended by a light string of length ' L '. It is imparted a minimum horizontal velocity at the lowest point A such that it just completes half circle reaching the top most position B. The ratio of kinetic energies $\frac{(\text{K.E.})_A}{(\text{K.E.})_B}$ is :

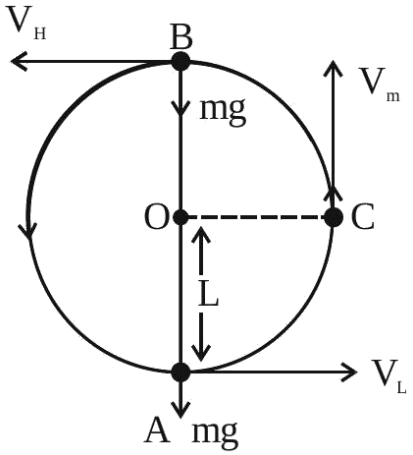

A. $3:2$

B. $5:1$

C. $2:5$

D. $1:5$

Correct answer: B

Source solution

Sol. Apply energy conservation between A & B

$$\frac{1}{2}mV_{\text{L}}^2 = \frac{1}{2}mV_{\text{H}}^2 + mg(2L)$$

$\because V_{\text{L}} = \sqrt{5gL}$

So,

$$V_{\mathrm{H}}=\sqrt{gL}$$

$$\frac{(K.E)_{\mathrm{A}}}{(K.E)_{\mathrm{B}}}=\frac{\frac{1}{2}m(\sqrt{5gL})^2}{\frac{1}{2}m(\sqrt{gL})^2}=\frac{5}{1}$$

Question 56

A block of mass 10 kg is suspended from a string of length 4 m . When pulled by a force F along horizontal from the midpoint. The upper half of the string makes 45° with the vertical, value of F is

A. $100\ \mathrm{N}$

B. 90 N

C. $75\ \mathrm{N}$

D. 70 N

Correct answer: A

Source solution

Sol.

At the point of equilibrium, resolve the tension T into horizontal and vertical components.

Since the string makes an angle of 45°,

$$T_x = T\cos 45^\circ = \frac{T}{\sqrt{2}}$$

$$T_y = T\sin 45^\circ = \frac{T}{\sqrt{2}}$$

For horizontal equilibrium,

$$\frac{T}{\sqrt{2}} = F$$

Given,

$$T = 100\sqrt{2}\,\mathrm{N}$$

Therefore,

$$F = \frac{100\sqrt{2}}{\sqrt{2}}$$

$$\boxed{F = 100\,\mathrm{N}}$$

Question 57

A 2 kg steel rod of length 0.6 m is clamped on a table vertically at its lower end and is free to rotate in vertical plane. The upper end is pushed so that the rod falls under gravity, Ignoring the friction due to clamping at its lower end, the speed of the free end of rod when it passes through its lowest position is ___ $\mathbf{ms}^{-1}$. (Take $\mathbf{g = 10\ ms^{-2}}$)

Numerical answer: _____

Enter the requested integer (0 decimal places).

Correct answer: 6

Source solution



ω



by energy conservation $\mathbf{mg\ell} = \frac{1}{2}\mathbf{I}\omega^2 = \frac{1}{2}\frac{\mathbf{m}\ell^2\omega^2}{3}$

$$\Rightarrow \omega = \sqrt{\frac{6g}{\ell}}$$

Speed $\mathbf{v} = \omega \mathbf{r} = \omega \ell = \sqrt{6\ \mathbf{g}\ell}$

$$v = \sqrt{6 \times 10 \times .6} = 6\ \mathbf{m/s}$$

Question 58

A string of area of cross-section $\mathbf{4\ mm^2}$ and length 0.5 is connected with a rigid body of mass 2 kg . The body is rotated in a vertical circular path of radius 0.5 m . The body acquires a speed of $\mathbf{5\ m/s}$ at the bottom of the circular path. Strain produced in the string when the body is at the bottom of the circle is $\times 10^{-5}$. (Use Young's modulus $10^{11}\ \mathbf{N/m^2}$ and $\mathbf{g = 10\ m/s^2}$)

Numerical answer: _____

Enter the requested value (an integer; 0 decimal places). Use the units and scaling stated in the question.

Correct answer: 30

Source solution

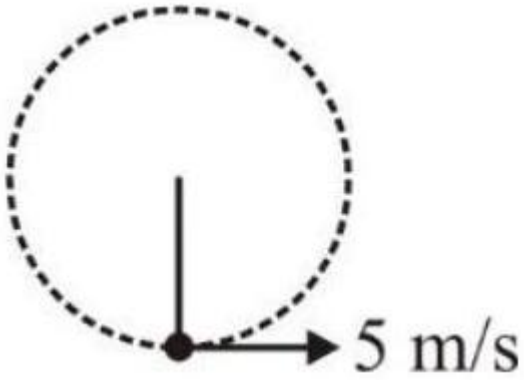

Strain $= \mathbf{F/AY}$

$= \frac{mg + \frac{mv^2}{R}}{AY}$

$= \frac{20 + \frac{2(5)^2}{0.5}}{3 \times 10^{-6} \times 10^{11}} = 30 \times 10^{-5}$

Question 59

A bob of mass m is suspended at a point O by a light string of length l and left to perform vertical motion (circular) as shown in figure. Initially, by applying horizontal velocity v_0 at the point ' A '. the string becomes slack when, the bob reaches at the point ' D '. The ratio of the kinetic energy of the bob at the points B and C is ..... .

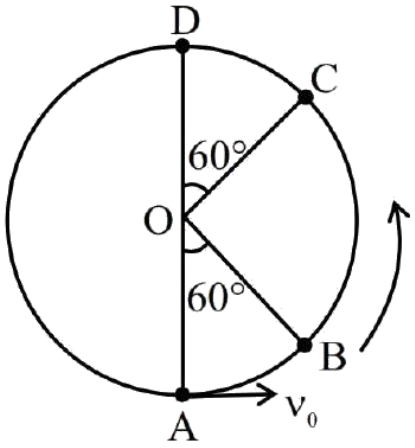

A. 2

B. 1

C. 4

D. 3

Correct answer: A

Source solution

Using conservation of mechanical energy between points A and B,

$$\frac{1}{2}mv_A^2 = \frac{1}{2}mv_B^2 + mgh$$

Substituting $v_A^2 = 5g\ell$ and $h = \frac{\ell}{2}$,

$$\frac{1}{2}m(5g\ell) = \frac{1}{2}mv_B^2 + mg\frac{\ell}{2}$$

$$\frac{5mg\ell}{2} - \frac{mg\ell}{2} = \frac{1}{2}mv_B^2$$

$$\mathrm{KE}_B = \frac{1}{2}mv_B^2 = 2mg\ell$$

Similarly, between points C and D,

$$\frac{1}{2}mv_C^2 = \frac{1}{2}mv_D^2 + mg\frac{\ell}{2}$$

Hence,

$$\mathrm{KE}_C = \frac{1}{2}mg\ell + mg\frac{\ell}{2} = mg\ell$$

Therefore,

$$\frac{\mathrm{KE}_B}{\mathrm{KE}_C} = \frac{2mg\ell}{mg\ell} = 2$$

$$\boxed{\frac{\mathrm{KE}_B}{\mathrm{KE}_C} = 2}$$

Question 60

A stone of mass 900 g is tied to a string and moved in a vertical circle of radius 1 m making 10 rpm . The tension in the string, when the stone is at the lowest point is (if $\pi^2 = 9.8$ and $\mathbf{g} = 9.8\ \mathbf{m/s^2}$)

A. 97 N

B. 9.8 N

C. 8.82 N

D. 17.8 N

Correct answer: B

Source solution

Sol.

Given,

$$m = 900\,\mathrm{g} = \frac{900}{1000}\,\mathrm{kg} = 0.9\,\mathrm{kg}$$

$$r = 1\,\mathrm{m}$$

$$N = 10\,\mathrm{rpm}$$

Angular speed,

$$\omega = \frac{2\pi N}{60} = \frac{2\pi(10)}{60} = \frac{\pi}{3}\,\mathrm{rad\ s^{-1}}$$

For the mass moving in a vertical circle, at the lowest point,

$$T - mg = mr\omega^2$$

Therefore,

$$T = mg + mr\omega^2$$

Substituting the values,

$$T = 0.9(9.8) + 0.9(1)\left(\frac{\pi}{3}\right)^2$$

$$= 8.82 + 0.9\left(\frac{\pi^2}{9}\right)$$

Using

$$\pi^2 \approx 9.8,$$

$$T = 8.82 + 0.98$$

$$T = 9.80\,\mathrm{N}$$

Hence,

$$\boxed{T = 9.8\,\mathrm{N}}$$

Question 61

A metal wire of length 0.5 m and cross-sectional area $10^{-4}\ \mathrm{m}^2$ has breaking stress $5 \times 10^8 \mathrm{Nm}^{-2}$. A block of 10 kg is attached at one end of the string and is rotating in a horizontal circle. The maximum linear velocity of block will be ms^{-1}.

Numerical answer: _____

Enter the requested value (an integer; 0 decimal places). Use the units and scaling stated in the question.

Correct answer: 50

Source solution

$\mathrm{T} = \frac{\mathrm{mv}^2}{\ell} = \frac{10 \times \mathrm{v}^2}{0.5} = 20\mathrm{v}^2$

$\mathrm{T}_{\max}$ = Breaking stress $\times$ Area

$= 5 \times 10^8 \times 10^{-4} = 5 \times 10^4$

$20\ \mathrm{V}^2 = 5 \times 10^4$

$\mathrm{V} = \sqrt{\frac{1}{4} 10^4} = 50\ \mathrm{m/s}$

Question 62

A ball is dropped from a height of 20 m . If the coefficient of restitution for the collision between ball and floor is 0.5, after hitting the floor, the ball rebounds to a height of m

Numerical answer: _____

Enter the requested value (an integer; 0 decimal places). Use the units and scaling stated in the question.

Correct answer: 5

Source solution

(5)

vi $\hat{\delta}^{eV}$

$V = \sqrt{2\,g(20)}$

$eV = \sqrt{2gh}$

$\frac{1}{e} = \sqrt{\frac{20}{h}}$

$h = 20e^2 = 20\left(\frac{1}{2}\right)^2$

$h = 5\,m$

Gravitation

Questions 63-64 / 2 selected / 0.7% practice weight / Consolidate

Question 63

The acceleration due to gravity at height h above the earth if $h \ll R$ (radius of earth) is given by

A. $g' = g\left(1 - \frac{2h}{R}\right)$

B. $g' = g\left(1 - \frac{2h^2}{R^2}\right)$

C. $g' = g\left(1 - \frac{h}{2R}\right)$

D. $g' = g\left(1 - \frac{h^2}{2R^2}\right)$

Correct answer: A

Source solution

Sol. For a point outside the surface of the Earth,

$$g = \frac{GM}{r^2}$$

where r is the distance from the center of the Earth. Thus,

$$g(h) = \frac{GM}{(R+h)^2} \Rightarrow g(h) = \frac{GM}{R^2\left(1+\frac{h}{R}\right)^2}$$

This leads to

$$g(h) = \frac{GM}{R^2}\left(1+\frac{h}{R}\right)^{-2}$$

If $h \ll R$, then

$$\left(1+\frac{h}{R}\right)^{-2} \approx 1-\frac{2h}{R}$$

Thus,

$$g(h)=\frac{GM}{R^2}\left(1-\frac{2h}{R}\right)$$

Finally, we have

$$g(h)=g_{\text{surface}}\left(1-\frac{2h}{R}\right), \quad \frac{GM}{R^2}=g_{\text{surface}}$$

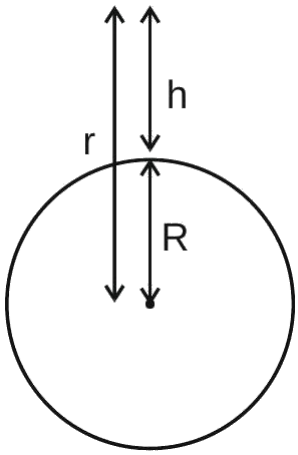

Question 64

The weight of a body on the earth is 400 N . Then weight of the body when taken to a depth half of the radius of the earth will be:

A. Zero

B. 300 N

C. 100 N

D. 200 N

Correct answer: D

Source solution

Sol. $\mathbf{W = mg = 400\,N}$

At depth d, gravity is given by

$$g' = g\left(1 - \frac{d}{R}\right)$$

For $d = \frac{R}{2}$,

$$g' = g\left(1 - \frac{R}{2R}\right) = \frac{g}{2}$$

Thus,

$$\mathbf{W' = mg' = \frac{mg}{2} = 200\,N}$$

Mechanical Properties of Solids

Question 65

A uniform heavy rod of mass 20 kg . Cross sectional area $\mathbf{0.4\ m^2}$ and length 20 m is hanging from a fixed support. Neglecting the lateral contraction, the elongation in the rod due to its own weight is $\mathbf{x \times 10^{-9}\ m}$. The value of x is .

:(Given. Young's modulus $\mathbf{Y = 2 \times 10^{11} Nm^{-2}}$ and $\mathbf{g = 10\ ms^{-2}}$)

Numerical answer: _____

Enter the requested value (an integer; 0 decimal places). Use the units and scaling stated in the question.

Correct answer: 25

Source solution

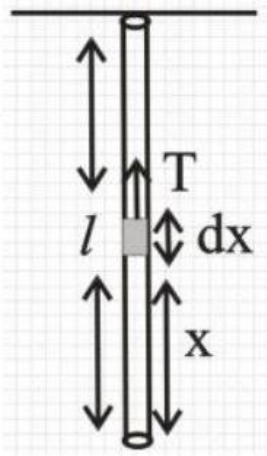

$\mathbf{Y = \frac{T}{A}\frac{dx}{dy}}$

$\mathbf{m = 20\ kg}$

$\mathbf{A = 0.4 m^2}$

$\mathbf{1 = 20\ m}$

let extension is dy in length dx

$\boldsymbol{Y = \frac{stress}{strain}}$

$\mathbf{Y = \frac{\frac{T}{A}}{\frac{dy}{dx}} = \frac{T}{A} \cdot \frac{dx}{dy}}$

$\boldsymbol{dy = \frac{Tdx}{AY}}$

Tension at a distance x from lower end $= \frac{mg}{\ell}x$

So. $\int_0^{\Delta l} dy = \int_0^{\ell} \frac{mg}{\ell} x \frac{dx}{AY}$

$\Delta\ell = \frac{mg}{\ell AY}\left[\frac{x^2}{2}\right]_0^{\ell}$

$\Delta\ell = \frac{mg\ell}{2AY}$

$\Delta\ell = \frac{20\times10\times20}{2\times0.4\times2\times10^{11}}$

2500×10^{-11}

$\Delta\ell = 25 \times 10^{-9}$

$= x \times 10^{-9}$

$x = 25$

Question 66

One end of a metal wire is fixed to a ceiling and a load of 2 kg hangs from the other end. A similar wire is attached to the bottom of the load and another load of 1 kg hangs from this lower wire. Then the ratio of longitudinal strain of upper wire to that of the lower wire will be .

[Area of cross section of wire $= 0.005\ \text{cm}^2$, $Y = 2 \times 10^{11}\text{Nm}^{-2}$ and $g = 10\ \text{ms}^{-2}$]

Numerical answer: _____

Enter the requested value or coefficient rounded to the nearest integer (0 decimal places).

Correct answer: 3

Source solution

The upper wire supports both loads, so $T_1 = 30\,\text{N}$; the lower wire supports the 1 kg load, so $T_2 = 10\,\text{N}$. For identical wires, strain is $T/(AY)$. The ratio is $30/10 = 3$.

Question 67

The speed of a transverse wave passing through a string of length 50 cm and mass 10 g is $60\ \mathrm{ms}^{-1}$. The area of cross-section of the wire is $2.0\ \mathrm{mm}^2$ and its Young's modulus is $1.2 \times 10^{11}\mathrm{Nm}^{-2}$. The extension of the wire over its natural length due to its tension will be $x \times 10^{-5}\ \mathrm{m}$. The value of x is .

Numerical answer: _____

Enter the requested value (an integer; 0 decimal places). Use the units and scaling stated in the question.

Correct answer: 15

Source solution

$$\mathrm{V_w} = \sqrt{\frac{\mathrm{T}}{\mu}}$$

$$60 = \sqrt{\frac{\mathrm{T}}{10\times10^{-3}} \times 0.5}$$

$$\mathrm{T} = \frac{(60)^2\times10^{-2}}{0.5} = 72\ \mathrm{N}$$

$$\Delta\ell = \frac{\mathrm{F}\ell}{\mathrm{AY}} = \frac{72\times0.5}{2\times10^{-6}\times1.2\times10^{11}}$$

$$= \frac{72\times5}{24} \times 10^{-5} = 15 \times 10^{-5}$$

Ans. 15

Question 68

A 100 m long wire having cross-sectional area $6.25 \times 10^{-4}\ \mathrm{m}^2$ and Young's modulus is $10^{10}\mathrm{Nm}^{-2}$ is subjected to a load of 250 N , then the elongation in the wire will be:

A. $4 \times 10^{-3}\ \mathrm{m}$

B. $6.25 \times 10^{-3}\ \mathrm{m}$

C. $6.25 \times 10^{-6}\ \mathrm{m}$

D. $4 \times 10^{-4}\ \mathrm{m}$

Correct answer: A

Source solution

Using

$$\text{Stress} = Y \times \text{Strain},$$

$$\frac{W}{A} = Y\frac{\Delta \ell}{\ell}.$$

Hence,

$$\Delta \ell = \frac{W\ell}{YA}.$$

Substituting

$$W = 250\ \mathrm{N}, \quad \ell = 100\ \mathrm{m},$$

$$Y = 10^{10}\ \mathrm{N\,m^{-2}}, \quad A = 6.25 \times 10^{-4}\ \mathrm{m}^2,$$

$$\Delta \ell = \frac{250 \times 100}{10^{10} \times 6.25 \times 10^{-4}}.$$

$$\Delta \ell = 4 \times 10^{-3}\ \mathrm{m}.$$

$$\boxed{\Delta \ell = 4 \times 10^{-3}\ \mathrm{m}}$$

or

$$\boxed{\Delta \ell = 4\ \mathrm{mm}}.$$

Question 69

In a Young's double slit experiment, the slits are separated by 0.3 mm and the screen is 1.5 m away from the plane of slits. Distance between fourth bright fringes on both sides of central bright is 2.4 cm . The frequency of light used is $\times 10^{14}$ Hz.

Numerical answer: _____

Enter the requested value (an integer; 0 decimal places). Use the units and scaling stated in the question.

Correct answer: 5

Source solution

$$8\beta = 2.4\ \mathrm{cm}$$
$$\frac{8\lambda\Delta}{\mathrm{d}} = 2.4\ \mathrm{cm}$$
$$\frac{8\times 1.5\times \mathrm{c}}{0.3\times 10^{-3}\times \mathrm{f}} = 2.4 \times 10^{-2}$$
$$\mathrm{f} = 5 \times 10^{14}\ \mathrm{Hz}$$

Question 70

In a Young's double slit experiment, the intensity at a point is $\left(\frac{1}{4}\right)^{\text{th}}$ of the maximum intensity, the minimum distance of the point from the central maximum is μm.
(Given : $\lambda = 600\ \text{nm},\ \text{d} = 1.0\ \text{mm}, \text{D} = 1.0\ \text{m}$)

Numerical answer: _____

Enter the requested value (an integer; 0 decimal places). Use the units and scaling stated in the question.

Correct answer: 200

Source solution

$$I = I_0 \cos^2\left(\frac{\Delta\phi}{2}\right)$$
$$\frac{\text{I}_0}{4} = \cos^2\left(\frac{\Delta\phi}{2}\right)$$
$$\Delta\phi = \frac{2\pi}{3}$$
$$\frac{2\pi}{\lambda}\left(\frac{\text{yd}}{\text{D}}\right) = \frac{2\pi}{3}$$
$$\text{y} = \frac{\lambda\text{D}}{3\,\text{d}} = \frac{600\times10^{-9}\times1}{3\times10^{-3}} = 2\times10^{-4}\ \text{m}$$

Question 71

A steel wire having a radius of 2.0 mm , carrying a load of 4 kg , is hanging from a ceiling. Given that $\mathbf{g = 3.1\pi\ ms^{-2}}$, what will be the tensile stress that would be developed in the wire?

A. $4.8 \times 10^6 \mathrm{Nm}^{-2}$

B. $3.1 \times 10^6 \mathrm{Nm}^{-2}$

C. $5.2 \times 10^6 \mathrm{Nm}^{-2}$

D. $6.2 \times 10^6 \mathrm{Nm}^{-2}$

Correct answer: B

Source solution

Stress is given by

$$\text{Stress} = \frac{F}{A}.$$

Here,

$$F = 4 \times 3.1\pi\ \text{N},$$

and the cross-sectional area is

$$A = \pi r^2 = \pi(2 \times 10^{-3})^2.$$

Therefore,

$$\text{Stress} = \frac{4 \times 3.1\pi}{\pi(2 \times 10^{-3})^2}.$$

$$= \frac{12.4}{4 \times 10^{-6}} = 3.1 \times 10^6\ \text{N m}^{-2}.$$

$$\boxed{\text{Stress} = 3.1 \times 10^6 \ \text{N m}^{-2}}$$

Question 72

In Young's double slit experiment, two slits S_1 and S_2 are ' d ' distance apart and the separation from slits to screen is D (as shown in figure). Now if two transparent slabs of equal thickness 0.1 mm but refractive index 1.51 and 1.55 are introduced in the path of beam ($\lambda = 4000\text{AA}$) from S_1 and S_2 respectively. The central bright fringe spot will shift by number of fringes.

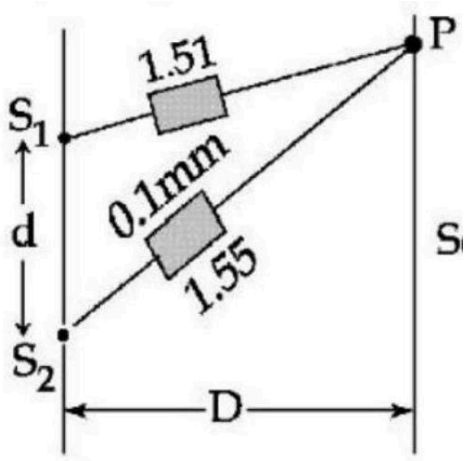

creen

Numerical answer: _____

Enter the requested value (an integer; 0 decimal places). Use the units and scaling stated in the question.

Correct answer: 10

Source solution

(10)

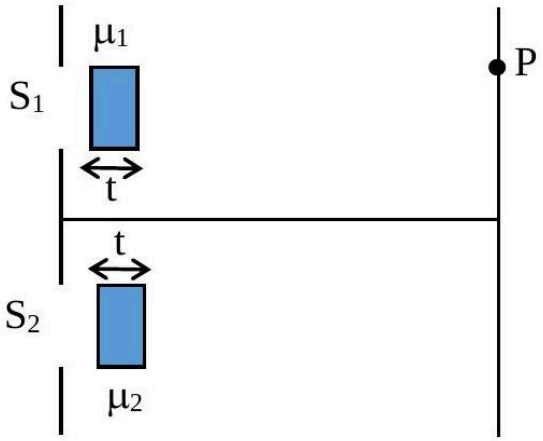

$$\mu_1 = 1.51 \quad t = 0.1\ \text{mm}$$
$$\mu_2 = 1.55 \quad \lambda = 4000\AA$$

Shifting central maxima

$\Delta x = [S_1P + (\mu_1 - 1)t] - [S_2P + (\mu_2 - 1)t]$

$0 = (S_1P - S_2P) + (\mu_1 - 1)t - (\mu_2 - 1)t$

$0 = \frac{yd}{D} + (\mu_1 - \mu_2)t$

$(\mu_2 - \mu_1)t = \frac{yd}{D}$

$(1.55 - 1.51)(0.1\ \text{mm}) = y \times \frac{d}{D}$

$$\frac{D}{d}(0.04 \times 0.1) \times 10^{-3} = y \tag{1}$$

Now

Fringe width $\Rightarrow \beta = \frac{\lambda D}{d}$

No. of fringes shifted $= \frac{y}{\beta} = \frac{4 \times 10^{-6}}{4000\AA} = 10$

Ans. 10

Thermal Properties of Matter

Questions 73-75 / 3 selected / 1.0% practice weight / Consolidate

Question 73

Two moles a monoatomic gas is mixed with six moles of a diatomic gas. The molar specific heat of the mixture at constant volume is :

A. $\frac{9}{4}R$

B. $\frac{7}{4}R$

C. $\frac{3}{2}R$

D. $\frac{5}{2}\mathrm{R}$

Correct answer: A

Source solution

$$C_v = \frac{n_1 C_{v1} + n_2 C_{v2}}{n_1 + n_2}$$

$$C_v = \frac{2\left(\frac{3}{2}R\right) + 6\left(\frac{5}{2}R\right)}{2+6}$$

$$C_v = \frac{3R + 15R}{8}$$

$$C_v = \frac{18R}{8}$$

$$\boxed{C_v = \frac{9}{4}R}$$

Question 74

0.056 kg of Nitrogen is enclosed in a vessel at a temperature of $127^{\circ}\mathrm{C}$. The amount of heat required to double the speed of its molecules is k cal. (Take $\mathrm{R}=2 \mathrm{calmole}^{-1} \mathrm{~K}^{-1}$)

Numerical answer: _____

Enter the requested value (an integer; 0 decimal places). Use the units and scaling stated in the question.

Correct answer: 12

Source solution

$0.056 \mathrm{~kg} \mathrm{~N}_2=56 \mathrm{gm}$ of $\mathrm{N}_2=2$ mole of N_2
$\mathrm{T}_1=400 \mathrm{~K}, \mathrm{v} \alpha \sqrt{\mathrm{T}}$ so $\mathrm{T}_2=4 \mathrm{~T}_1=1600 \mathrm{~K}$
$\mathrm{Q}=\frac{\mathrm{f}}{2} \mathrm{nR} \Delta \mathrm{T}$
$\mathrm{f}=5$
$\mathrm{Q}=12 \mathrm{kcal}$

Question 75

A heat engine operates with the cold reservoir at temperature 324 K .

The minimum temperature of the hot reservoir, if the heat engine takes 300 J heat from the hot reservoir and delivers 180 J heat to the cold reservoir per cycle, is K.

Numerical answer: _____

Enter the requested value (an integer; 0 decimal places). Use the units and scaling stated in the question.

Correct answer: 540

Source solution

$\mathbf{T_c = 324k}$
$\mathbf{T_H = ?}$
$\mathbf{Q_H = 300\ J}$
$\mathbf{Q_L = 180\ J}$

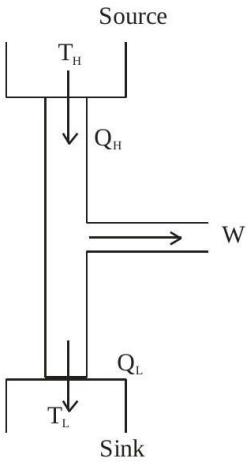

$1 - \frac{Q_L}{Q_H} = 1 - \frac{T_L}{T_H}$
$\frac{Q_L}{Q_H} = \frac{T_L}{T_H}$
$T_H = \frac{Q_H}{Q_L} \times T_L = \frac{300}{180} \times 324 = 540\ K$

Thermodynamics

Questions 76-90 / 15 selected / 5.0% practice weight / Focus first

Question 76

A diatomic gas with rigid molecules does 10 J of work when expanded at constant pressure. What would be the heat energy absorbed by the gas, in this process?

A. 30 J

B. 35 J

C. 25 J

D. 40 J

Correct answer: B

Source solution

$W = nR\Delta T = 10\,\text{J}$

$$\begin{aligned} & \Delta Q = (\Delta Q)_P = nC_P\Delta T \\ \therefore \quad & \Delta Q = n \cdot \frac{7}{2} R \cdot \Delta T \\ & = \frac{7}{2} \cdot (10) \\ & = 35\,\text{J} \end{aligned}$$

Question 77

A diatomic gas $(\gamma = 1.4)$ does 200 J of work when it is expanded isobarically. The heat given to the gas in the process is :

A. 850 J

B. 800 J

C. 600 J

D. 700 J

Correct answer: D

Source solution

$$\gamma = 1 + \frac{2}{f}.$$

Given,

$$\gamma = 1.4.$$

Therefore,

$$1.4 = 1 + \frac{2}{f}$$

$$\frac{2}{f} = 0.4$$

$$f = 5.$$

For an ideal gas,

$$C_P = \left(\frac{f+2}{2}\right)R.$$

Substituting $f = 5$,

$$C_P = \frac{7}{2}R.$$

Given that

$$nR\Delta T = 200\,\text{J},$$

the heat supplied at constant pressure is

$$Q = nC_P\Delta T.$$

Hence,

$$Q = \left(\frac{7}{2}\right)nR\Delta T = \left(\frac{7}{2}\right)(200).$$

$$Q = 700\,\text{J}.$$

Therefore,

$$\boxed{Q = 700\,\text{J}}.$$

Question 78

n moles of an ideal gas with constant volume heat capacity C_V undergo an isobaric expansion by certain volume. The ratio of the work done in the process, to the heat supplied is :

A. $\frac{4nR}{C_V+nR}$

B. $\frac{nR}{C_V+nR}$

C. $\frac{4nR}{C_V-nR}$

D. $\frac{nR}{C_V-nR}$

Correct answer: C

Source solution

$$C_P - C_V = nR$$

$$C_P = C_V + nR$$

$$\gamma = \frac{C_P}{C_V} = \frac{7}{5}$$

$$\frac{C_V + nR}{C_V} = \frac{7}{5}$$

$$1 + \frac{nR}{C_V} = \frac{7}{5}$$

$$\frac{nR}{C_V} = \frac{2}{5}$$

$$C_V = \frac{5}{2}nR$$

$$\frac{4nR}{C_V - nR} = \frac{4nR}{\frac{5}{2}nR - nR}$$

$$= \frac{4nR}{\frac{3}{2}nR}$$

$$= \frac{8}{3}$$

$$\boxed{\frac{4nR}{C_V - nR} = \frac{8}{3}}$$

Question 79

The temperature of 3.00 mol of an ideal diatomic gas is increased by 40.0 °C without changing the pressure of the gas. The molecules in the gas rotate but do not oscillate. If the ratio of change in internal energy of the gas to the amount of workdone by the gas is $\frac{x}{10}$. Then the value of x (round off to the nearest integer) is ___. (Given $\mathbf{R = 8.31\ J\ mol^{-1}\ K^{-1}}$)

Numerical answer: _____

Enter the requested integer (0 decimal places).

Correct answer: 25

Source solution

Pressure is not changing ⇒ isobaric process

$$\Rightarrow \mathbf{\Delta U = nC_v\Delta\ T = \frac{5nR\Delta\ T}{2}}$$

and $\mathbf{W = nR\Delta T}$

$$\frac{\Delta U}{W} = \frac{5}{2} = \frac{x}{10} \Rightarrow x = 25.00$$

Question 80

A sample of gas with $\gamma = 1.5$ is taken through an adiabatic process in which the volume is compressed from $1200\ \mathrm{cm}^3$ to $300\ \mathrm{cm}^3$. If the initial pressure is 200 kPa . The absolute value of the workdone by the gas in the process = J.

Numerical answer: _____

Enter the requested value (an integer; 0 decimal places). Use the units and scaling stated in the question.

Correct answer: 480

Source solution

$v = 1.5$

$\mathrm{p_1\ V_1^{\gamma} = p_2\ V_2^{\gamma}}$

$(200)\ (1200)^{1.5} = \mathrm{P^2}(300)^{1.5}$

$\mathrm{P_2} = 200[4]^{3/2} = 1600\mathrm{kPa}$

$|\ \mathrm{W.D.}\ | = \frac{p_2 v_2 - p_1 v_1}{v-1} = \left(\frac{480-240}{0.5}\right) = 480\ \mathrm{J}$

Question 81

A diatomic gas $(\gamma = 1.4)$ does 100 J of work in an isobaric expansion. The heat given to the gas is :

A. 350 J

B. 490 J

C. 150 J

D. 250 J

Correct answer: A

Source solution

For an isobaric process:

$$w = P\Delta v = nR\Delta T = 100\,\text{J}$$

$$Q = \Delta u + w$$

$$Q = \frac{f}{2}nR\Delta T + nR\Delta T$$

$$Q = \left(\frac{f}{2} + 1\right)nR\Delta T$$

$$Q = \left(\frac{5}{2} + 1\right) \cdot 100 = 350\,\text{J}$$

Question 82

A mixture of one mole of monoatomic gas and one mole of a diatomic gas (rigid) are kept at room temperature $(27^\circ C)$. The ratio of specific heat of gases at constant volume respectively is:

A. $\frac{7}{5}$

B. $\frac{3}{2}$

C. $\frac{3}{5}$

D. $\frac{5}{3}$

Correct answer: C

Source solution

$$\frac{(C_V)_{\text{mono}}}{(C_V)_{\text{dia}}} = \frac{\frac{3}{2}R}{\frac{5}{2}R}.$$

Cancelling R,

$$\frac{(C_V)_{\text{mono}}}{(C_V)_{\text{dia}}} = \frac{3}{5}.$$

Hence,

$$\boxed{\frac{(C_V)_{\text{mono}}}{(C_V)_{\text{dia}}} = \frac{3}{5}}.$$

Question 83

A sample of gas at temperature T is adiabatically expanded to double its volume. Adiabatic constant for the gas is $\gamma = 3/2$. The work done by the gas in the process is : $(\mu = 1$ mole $)$

A. $\mathrm{RT}[\sqrt{2} - 2]$

B. $\mathrm{RT}[1 - 2\sqrt{2}]$

C. $\mathrm{RT}[2\sqrt{2} - 1]$

D. $\mathrm{RT}[2 - \sqrt{2}]$

Correct answer: D

Source solution

$$W = \frac{nR\Delta T}{1-\gamma}.$$

For an adiabatic process,

$$TV^{\gamma-1} = \text{constant}.$$

Given that the volume doubles,

$$T_f(2V)^{\gamma-1} = TV^{\gamma-1}.$$

For a monoatomic gas,

$$\gamma = \frac{5}{3}.$$

Therefore,

$$T_f = T\left(\frac{V}{2V}\right)^{\gamma-1} = T\left(\frac{1}{2}\right)^{2/3}.$$

If $\gamma = \frac{3}{2}$ is assumed, then

$$T_f = T\left(\frac{1}{2}\right)^{1/2} = \frac{T}{\sqrt{2}}.$$

Hence,

$$\Delta T = T_f - T = \frac{T}{\sqrt{2}} - T.$$

Substituting into the work expression,

$$W = \frac{R\left(\frac{T}{\sqrt{2}} - T\right)}{1 - \frac{3}{2}}.$$

$$W = 2RT\left(1 - \frac{1}{\sqrt{2}}\right).$$

$$W = \frac{2RT(\sqrt{2} - 1)}{\sqrt{2}} = RT(2 - \sqrt{2}).$$

Therefore,

$$\boxed{W = RT(2 - \sqrt{2})}.$$

Question 84

7 mole of certain monoatomic ideal gas undergoes a temperature increase of 40 K at constant pressure. The increase in the internal energy of the gas in this process is(Given $\mathbf{R = 8.3 JK^{-1}\ mol^{-1}}$)

A. 5810 J

B. 3486 J

C. 11620 J

D. 6972 J

Correct answer: B

Source solution

For a quasi-static process, the change in internal energy of an ideal gas is

$$\Delta U = nC_V \Delta T.$$

For a monoatomic ideal gas,

$$C_V = \frac{3R}{2}.$$

Therefore,

$$\Delta U = n\left(\frac{3R}{2}\right)\Delta T.$$

Substituting

$$n = 7, \qquad R = 8.3\,\text{J mol}^{-1}\text{K}^{-1}, \qquad \Delta T = 40\,\text{K},$$

we get

$$\Delta U = 7 \times \frac{3}{2} \times 8.3 \times 40.$$

$$\Delta U = 3486\,\text{J}.$$

Question 85

Read the following statements :A. When small temperature difference between a liquid and its surrounding is doubled the rate of loss of heat of the liquid becomes twice.B. Two bodies P and Q having equal surface areas are maintained at temperature $10^{\circ}C$ and $20^{\circ}C$. The thermal radiation emitted in a given time by P and Q are in the ratio $1:1.15$C. A carnot Engine working between 100 K and 400 K has an efficiency of 75% D. When small temperature difference between a liquid and its surrounding is quadrupled, the rate of loss of heat of the liquid becomes twice.Choose the correct answer from the options given below:

A. A, B, C only

B. A, B only

C. A, C only

D. B, C, D only

Correct answer: A

Source solution

Statement A

According to Newton's law of cooling,

$$\frac{dQ}{dt} \propto (T - T_s),$$

for small temperature differences.

Hence, if the temperature difference is doubled, the rate of loss of heat also doubles.

A is true.

Statement B

According to Stefan's law,

$$E \propto T^4.$$

For temperatures

$$T_P = 10^\circ\mathrm{C} = 283\,\mathrm{K}, \qquad T_Q = 20^\circ\mathrm{C} = 293\,\mathrm{K},$$

$$\frac{E_P}{E_Q} = \left(\frac{283}{293}\right)^4 \approx 0.87.$$

Thus,

$$E_P : E_Q \approx 1 : 1.15.$$

$$\boxed{\text{B is true.}}$$

Statement C

For a Carnot engine,

$$\eta = 1 - \frac{T_C}{T_H}.$$

With

$$T_C = 100\,\mathrm{K}, \qquad T_H = 400\,\mathrm{K},$$

$$\eta = 1 - \frac{100}{400} = \frac{3}{4} = 75\%.$$

C is true.

Statement D

From Newton's law of cooling,

$$\frac{dQ}{dt} \propto (T - T_s).$$

If the temperature difference is quadrupled, the rate of loss of heat becomes four times, not twice.

D is false.

Therefore,

Statements A, B and C are correct.

Question 86

A thermally insulated vessel contains an ideal gas of molecular mass M and ratio of specific heats 1.4. Vessel is moving with speed v and is suddenly brought to rest. Assuming no heat is lost to the surrounding and vessel temperature of the gas increases by : ($\mathbf{R}=$ universal gas constant)

A. $\frac{Mv^2}{7R}$

B. $\frac{Mv^2}{5R}$

C. $2\frac{Mv^2}{7R}$

D. $7\frac{\mathrm{Mv}^2}{5\mathrm{R}}$

Correct answer: B

Source solution

Sol.

$$\frac{\mathrm{C_P}}{\mathrm{C_v}}=1+\frac{2}{\mathrm{F}}=1.4\Rightarrow \mathrm{F}=5$$

By conservation of energy,

$$\frac{\mathrm{F}}{2}nR\Delta T=\frac{1}{2}[nm]v^2$$

$$\Delta T=\frac{mv^2}{FR}=\frac{Mv^2}{5R}$$

Question 87

A diatomic gas $(\gamma = 1.4)$ does 400 J of work when it is expanded isobarically. The heat given to the gas in the process is J.

Numerical answer: _____

Enter the requested value (an integer; 0 decimal places). Use the units and scaling stated in the question.

Correct answer: 1400

Source solution

$$Q = nC_p\Delta T = \frac{nv}{v-1}R\Delta T$$
$$Q = \frac{v}{v-1}\omega = \frac{1.4}{0.4} \times 400 = 1400\ J$$

Question 88

A sample of an ideal gas is taken through the cyclic process ABCA as shown in figure. It absorbs, 40 J of heat during the part AB , no heat during BC and rejects 60 J of heat during CA . A work 50 J is done on the gas during the part BC . The internal energy of the gas at A is 1560 J . The work done by the gas during the part CA is:

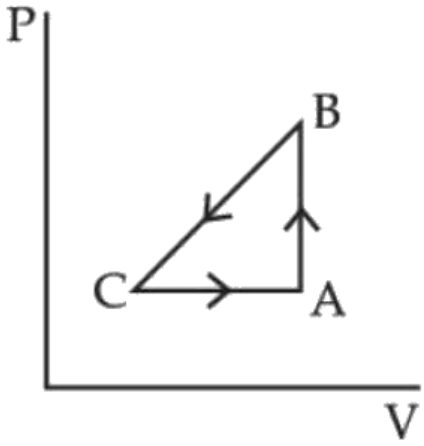

A. 20 J

B. 30 J

C. -30 J

D. -60 J

Correct answer: B

Source solution

$$\Delta Q_{\text{cycle}} = 40 - 60 = -20\,\text{J}.$$

For a cyclic process,

$$\Delta U_{\text{cycle}} = 0.$$

Hence, from the first law of thermodynamics,

$$\Delta Q_{\text{cycle}} = W_{\text{cycle}}.$$

Therefore,

$$W_{\text{cycle}} = -20\,\text{J}.$$

Also,

$$W_{\text{cycle}} = W_{BC} + W_{CA}.$$

Thus,

$$-20 = W_{BC} + W_{CA}.$$

Given

$$W_{BC} = -50\,\text{J},$$

we get

$$W_{CA} = -20 - (-50).$$

$$W_{CA} = 30\,\text{J}.$$

Hence,

$$\boxed{W_{CA} = 30\,\text{J}}.$$

Question 89

An ideal gas goes from an initial state to final state. During the process, the pressure of gas increases linearly with temperature (A) The work done by gas during the process is zero. (B) The heat added to gas is different from change in its internal energy (C) The volume of the gas is increased (D) The internal energy of the gas is increased (E) The process is isochoric (constant volume process)Choose the correct answer from the options given below :-

A. A, B, C, D Only

B. A, D, E Only

C. E Only

D. A, C Only

Correct answer: B

Source solution

Given that the pressure increases linearly with temperature,

$$P \propto T.$$

Using the ideal gas equation,

$$PV = nRT.$$

::contentReference[oaicite:0]{index=0}

Since

$$\frac{P}{T} = \text{constant},$$

from

$$PV = nRT,$$

we get

$$V = \frac{nR}{P/T} = \textbf{constant.}$$

Hence, the process is isochoric.

$$\boxed{\textbf{(E) is correct.}}$$

Since the volume remains constant,

$$W = \int P\,dV = 0.$$

Therefore,

$$\boxed{\textbf{(A) is correct.}}$$

As pressure increases linearly with temperature,

$$\textbf{T increases.}$$

For an ideal gas,

$$\Delta U = nC_V\Delta T.$$

Since $\Delta T > 0$,

$$\Delta U > 0.$$

Thus,

$$\boxed{\text{(D) is correct.}}$$

Also, for an isochoric process,

$$W = 0,$$

and by the first law,

$$Q = \Delta U.$$

Therefore, statement (B) is false.

Since the volume remains constant,

$$\boxed{\text{(C) is false.}}$$

Hence, the correct statements are

$$\boxed{\text{A, D and E.}}$$

Question 90

The magnitude of heat exchanged by a system for the given cyclic process ABCA (as shown in figure) is (in SI unit)

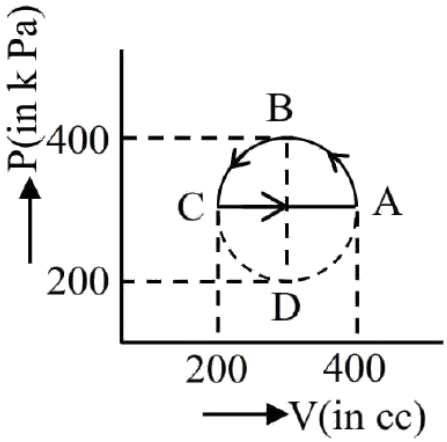

A. 10π

B. 5π

C. zero

D. 40π

Correct answer: B

Source solution

The work done is equal to the area enclosed by the semicircular loop on the P-V diagram.

The area of a semicircle is

$$W = \frac{1}{2}\pi ab,$$

where

$$a = \frac{200}{2} \times 10^3 \text{ Pa}, \qquad b = \frac{200}{2} \times 10^{-6} \text{ m}^3.$$

Therefore,

$$W = \frac{1}{2}\pi\left(\frac{200}{2} \times 10^{3}\right)\left(\frac{200}{2} \times 10^{-6}\right).$$

$$W = \frac{1}{2}\pi\left(100 \times 10^{3}\right)\left(100 \times 10^{-6}\right).$$

$$W = \frac{1}{2}\pi\,(10).$$

$$W = 5\pi\ \mathrm{J}.$$

Hence,

$$\boxed{W = 5\pi\ \mathrm{J}}.$$

Kinetic Theory

Question 91

Two gases Ar (40) and Xe (131) at equal temperature have the same number density. Their diameters are 0.07 nm and 0.10 nm respectively. Find the ratio of their mean free time

A. 1.03

B. 2.04

C. 2.09

D. 2.49

Correct answer: A

Source solution

$$\lambda = \frac{1}{\sqrt{2}\, n\pi d^2}$$

$$t = \frac{\lambda}{\bar{v}}$$

$$\frac{t_{\text{Ar}}}{t_{\text{Xe}}} = \frac{\lambda_{\text{Ar}}}{\lambda_{\text{Xe}}} \cdot \frac{\bar{v}_{\text{Xe}}}{\bar{v}_{\text{Ar}}}$$

$$= \frac{d_{\text{Xe}}^2}{d_{\text{Ar}}^2} \sqrt{\frac{M_{\text{Ar}}}{M_{\text{Xe}}}}$$

$$= \left(\frac{0.10}{0.07}\right)^2 \sqrt{\frac{40}{131}}$$

$$\approx 1.03$$

$$\boxed{\frac{t_{Ar}}{t_{Xe}} \approx 1.03}$$

Question 92

The average translational kinetic energy of N_2 gas molecules at ___ °C becomes equal to the K.E. of an electron accelerated from rest through a potential difference of 0.1 volt. (Given $k_B = 1.38 \times 10^{-23}\ J/K$) (Fill the nearest integer).

Numerical answer: _____

Enter the requested integer (0 decimal places).

Correct answer: 500

Source solution

Given Translation K.E. of N_2 = K.E. of electron

$$\frac{3}{2}kT = eV$$
$$\frac{3}{2} \times 1.38 \times 10^{-23}\ T = 1.6 \times 10^{-19} \times 0.1$$
$$\Rightarrow\ T = 773k$$
$$T = 773 - 273 = 500^\circ C$$

Question 93

A gas mixture consists of 8 moles of argon and 6 moles of oxygen at temperature T. Neglecting all vibrational modes, the total internal energy of the system is

A. 29 RT

B. 20 RT

C. 27 RT

D. 21 RT

Correct answer: C

Source solution

$$U = nC_VT$$

For the mixture,

$$U = n_1C_{V_1}T + n_2C_{V_2}T$$

$$= 8\left(\frac{3R}{2}\right)T + 6\left(\frac{5R}{2}\right)T$$

$$= \frac{24RT}{2} + \frac{30RT}{2}$$

$$= 12RT + 15RT$$

$$= 27RT$$

$$\boxed{U = 27RT}$$

Question 94

The volume V of an enclosure contains a mixture of three gases, 16 g of oxygen, 28 g of nitrogen and 44 g of carbon dioxide at absolute temperature T. Consider R as universal gas constant. The pressure of the mixture of gases is :

A. $\frac{88RT}{V}$

B. $\frac{3RT}{V}$

C. $\frac{5}{2}\frac{\mathrm{RT}}{\mathrm{V}}$

D. $\frac{4RT}{V}$

Correct answer: C

Source solution

Sol. $\mathrm{PV} = (n_1 + n_2 + n_3)\mathrm{RT}$

$$P \cdot V = \left[\frac{16}{32} + \frac{28}{28} + \frac{44}{44}\right] RT$$

$\mathrm{PV} = \left[\frac{1}{2} + 1 + 1\right]\mathrm{RT}$

$$\mathrm{P} = \frac{5}{2} \cdot \frac{\mathrm{RT}}{V}$$

Question 95

If one mole of the polyatomic gas is having two vibrational modes and β is the ratio of molar specific heats for polyatomic gas $\left(\beta = \frac{C_P}{C_V}\right)$ then the value of β is :

A. 1.02

B. 1.2

C. 1.25

D. 1.35

Correct answer: B

Source solution

Sol. (2) $f = 4 + 3 + 3 = 10$ assuming non-linear

$$\beta = \frac{C_p}{C_v} = 1 + \frac{2}{f} = \frac{12}{10} = 1.2$$

Question 96

The temperature of a gas is $-78^{\circ}\mathrm{C}$ and the average translational kinetic energy of its molecules is K . The temperature at which the average translational kinetic energy of the molecules of the same gas becomes 2 K is :

A. $-39^{\circ}\mathrm{C}$

B. $117^{\circ}\mathrm{C}$

C. $127^{\circ}\mathrm{C}$

D. $-78^{\circ}\mathrm{C}$

Correct answer: B

Source solution

Sol. $\mathbf{K.E} = \frac{nf_1RT}{2}$

$\mathbf{T_i} = -78^{\circ}\mathrm{C} \rightarrow 273 + [-78^{\circ}\mathrm{C}] = 195\,\mathrm{K}$

K.E $\propto T$

To double the K.E, the temperature also becomes double:

$\mathbf{T_f} = 2 \cdot 195\,\mathrm{K} = 390\,\mathrm{K}$

$\mathbf{T_f} = 390\,\mathrm{K} = 117^{\circ}\mathrm{C}$

Question 97

A vessel contains 14 g of nitrogen gas at a temperature of $27^{\circ}\mathrm{C}$. The amount of heat to be transferred to the gap to double the r.m.s. speed of its molecules will be : (Take $\mathrm{R}=8.32\ \mathrm{J\ mol^{-1}k^{-1}}$)

A. 2229 J

B. 5616 J

C. 9360 J

D. $13,104\ \mathrm{J}$

Correct answer: C

Source solution

$$v_{\mathrm{rms}} \propto \sqrt{T}$$

$$v_{\mathrm{rms},i} \propto \sqrt{300\,\mathrm{K}}$$

Given,

$$v_{\mathrm{rms},f} = 2v_{\mathrm{rms},i}$$

$$\sqrt{T_f} = 2\sqrt{300}$$

$$T_f = 1200\,\mathrm{K}$$

$$\Delta T = T_f - T_i = 1200 - 300 = 900\,\mathrm{K}$$

$$n = \frac{14}{28} = \frac{1}{2}$$

For a diatomic gas,

$$C_V = \frac{5R}{2}$$

Therefore,

$$Q = nC_V\Delta T$$

$$= \frac{1}{2} \times \frac{5R}{2} \times 900$$

$$= 1125R$$

$$= 1125 \times 8.314$$

$$\approx 9353 \text{ J}$$

$$\boxed{Q \approx 9.36 \times 10^3 \text{ J}}$$

$$\boxed{Q \approx 9360 \text{ J}}$$

Question 98

Energy of 10 non rigid diatomic molecules at temperature T is :

A. $\frac{7}{2}\mathrm{RT}$

B. $70\ \mathrm{K_BT}$

C. 35 RT

D. $35\ \mathrm{K_BT}$

Correct answer: D

Source solution

$$f = 3 + 2 + 2(3N - 5)$$

For $N = 2$,

$$f = 3 + 2 + 2(3 \times 2 - 5)$$

$$= 3 + 2 + 2(1)$$

$$= 7$$

Energy of one molecule:

$$E = \frac{f}{2} k_B T$$

$$E = \frac{7}{2} k_B T$$

Energy of 10 molecules:

$$E_{10} = 10\left(\frac{7}{2}k_BT\right)$$

$$= 35k_BT$$

$$\boxed{E_{10} = 35k_BT}$$

Question 99

According to kinetic theory of gases,A. The motion of the gas molecules freezes at $0°C$B. The mean free path of gas molecules decreases if the density of molecules is increased.C. The mean free path of gas molecules increases if temperature is increased keeping pressure constant.D. Average kinetic energy per molecule per degree of freedom is $\frac{3}{2}k_BT$ (for monoatomic gases)Choose the most appropriate answer from the options given below:

A. A and C only

B. B and C only

C. A and B only

D. C and D only

Correct answer: B

Source solution

A.

The molecular motion does not freeze at

$$0°C.$$

It would cease only at absolute zero $(0\,K)$.

$$\boxed{\text{A is False}}$$

B.

Mean free path,

$$\lambda = \frac{1}{\sqrt{2}\pi d^2 n}$$

where n is the number density.

Thus,

$$\lambda \propto \frac{1}{n}$$

If density increases, λ decreases.

$$\boxed{\text{B is True}}$$

C.

Using

$$\lambda = \frac{k_B T}{\sqrt{2}\pi d^2 P}$$

at constant pressure,

$$\lambda \propto T$$

Hence, mean free path increases with temperature.

$$\boxed{\text{C is True}}$$

D.

By the law of equipartition of energy,

$$\text{Average K.E. per degree of freedom} = \frac{1}{2}k_BT$$

not

$$\frac{3}{2}k_BT.$$

$$\boxed{\text{D is False}}$$

Therefore,

$$\boxed{\text{Only B and C are correct.}}$$

Question 100

(A flask contains Hydrogen and Argon in the ratio $\mathbf{2:1}$ by mass. The temperature of the mixture is $\mathbf{30^{\circ}C}$. The ratio of average kinetic energy per molecule of the two gases (K argon $/\mathbf{K}$ hydrogen) is: (Given: Atomic Weight of $\mathbf{Ar = 39.9}$)

A. 1

B. 2

C. $\frac{39.9}{2}$

D. 39.9

Correct answer: A

Source solution

$$\text{Average kinetic energy per molecule} = \frac{3}{2}kT$$

Since average kinetic energy depends only on temperature,

$$K_{\text{Ar}} = K_{\text{H}_2}$$

Therefore,

$$\frac{K_{\text{Ar}}}{K_{\text{H}_2}} = 1$$

Question 101

The temperature of an ideal gas is increased from 200 K to 800 K . If r.m.s. speed of gas at 200 K is $\mathbf{v_0}$. Then, r.m.s. speed of the gas at 800 K will be:

A. $\mathbf{v_0}$

B. $4v_0$

C. $\frac{v_0}{4}$

D. $2\mathbf{v_0}$

Correct answer: D

Source solution

$$V_{\text{rms}} = \sqrt{\frac{3RT}{M}}$$

$$\therefore \quad V_{\text{rms}} \propto \sqrt{T}$$

If the temperature is increased by a factor of 4,

$$\frac{V'_{\text{rms}}}{V_{\text{rms}}} = \sqrt{\frac{T'}{T}} = \sqrt{4} = 2$$

$$\therefore \quad V'_{\text{rms}} = 2V_{\text{rms}}$$

Hence, the rms speed gets doubled.

$$\boxed{V'_{\text{rms}} = 2V_{\text{rms}}}$$

Oscillations

Questions 102-104 / 3 selected / 1.0% practice weight / Consolidate

Question 102

A rod of mass ' M ' and length ' 2 L ' is suspended at its middle by a wire. It exhibits torsional oscillations; If two masses each of ' m ' are attached at distance ' $\mathbf{L/2}$ ' from its centre on both sides, it reduces the oscillation frequency by $\mathbf{20\%}$. The value of ratio $\mathbf{m/M}$ is close to :

A. 0.17

B. 0.37

C. 0.57

D. 0.77

Correct answer: B

Source solution

Sol. Frequency of torsional oscillations is given by

$$f = \frac{k}{\sqrt{I}}$$

$$f_1 = \frac{k}{\sqrt{\frac{M(2L)^2}{12}}}$$

$$f_2 = \frac{k}{\sqrt{\frac{M(2L)^2}{12} + 2m\left(\frac{L}{2}\right)^2}}$$

$$f_2 = 0.8 f_1$$

$$\frac{m}{M} = 0.375$$

Question 103

A mass 0.9 kg , attached to a horizontal spring, executes SHM with an amplitude $\mathbf{A_1}$. When this mass passes through its mean position, then a smaller mass of 124 g is placed over it and both masses move together with amplitude $\mathbf{A_2}$. If the ratio $\frac{A_1}{A_2}$ is $\frac{\alpha}{\alpha-1}$, then the value of $\boldsymbol{\alpha}$ will be .

Numerical answer: _____

Enter the requested value (an integer; 0 decimal places). Use the units and scaling stated in the question.

Correct answer: 16

Source solution

$\frac{1}{2}\mathrm{kA}^2 = \frac{\mathrm{p}^2}{2\,\mathrm{m}}$
$\Rightarrow \left(\frac{\mathrm{A_1}}{\mathrm{A_2}}\right)^2 = \frac{\mathrm{m_2}}{\mathrm{m_1}} = \frac{1024}{900}$
$\Rightarrow \frac{\mathrm{A_1}}{\mathrm{A_2}} = \frac{32}{30} = \frac{16}{15} = \frac{16}{16-1}$
$\therefore \alpha = 16$

Question 104

A pendulum of length 2 m consists of a wooden bob of mass 50 g . A bullet of mass 75 g is fired towards the stationary bob with a speed v. The bullet emerges out of the bob with a speed $\frac{v}{3}$ and the bob just completes the vertical circle. The value of v is ms^{-1}. (if $\mathbf{g} = 10\ \mathrm{m/s^2}$)

Numerical answer: _____

Enter the requested value (an integer; 0 decimal places). Use the units and scaling stated in the question.

Correct answer: 10

Source solution

Considering Only Horizontal direction

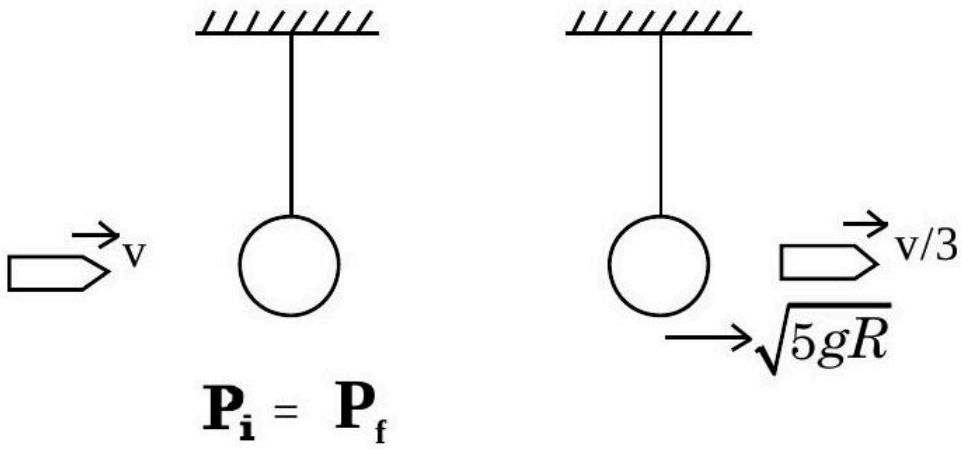

$(75v) + 0 = 50(\sqrt{5gR}) + 75\frac{v}{3}$
$75\left(v - \frac{v}{3}\right) = 50\sqrt{100}$
$v = 10\ \mathrm{m/s}$

Waves

Questions 105-127 / 23 selected / 7.7% practice weight / Focus first

Question 105

A beam of electromagnetic radiation of intensity $6.4 \times 10^{-5}\ \mathrm{W/cm^2}$ is comprised of wavelength, $\lambda = 310\ \mathrm{nm}$. It falls normally on a metal (work function 2 eV) of surface area $1\ \mathrm{cm^2}$. If one in 10^3 photons ejects an electron, total number of electrons ejected in $1s$ is 10^x ($hc = 1240\mathrm{eV} - nm, 1\mathrm{eV} = 1.6 \times 10^{-19}\ \mathrm{J}$), then the value of x is

Numerical answer: _____

Enter the requested value (an integer; 0 decimal places). Use the units and scaling stated in the question.

Correct answer: 11

Source solution

(11)

$$\begin{aligned} P = & \text{ Intensity } \times \text{ Area} \\ & = 6.4 \times 10^{-5}\ \mathrm{W - cm^{-2}} \times 1\ \mathrm{cm^2} \\ & = 6.4 \times 10^{-5}\ \mathrm{W} \end{aligned}$$

For photoelectric effect to take place, energy should be greater than work function
Now,

$$E = \frac{1240}{310} = 4\mathrm{eV} > 2\mathrm{eV}$$

Therefore, photoelectric effect takes place
Here n is the number of photons emitted.

$$\begin{aligned} n \times E &= I \times A \\ \Longrightarrow n = \frac{IA}{E} &= \frac{6.4 \times 10^{-5}}{6.4 \times 10^{-19}} = 10^{14} \end{aligned}$$

Where, n is number of incident photon
Since, 1 out of every 1000 photons are sucessfull in ejecting 1 photoelectron

Therefore, the number of photoelectrons emitted is

$$= \frac{10^{14}}{10^{3}}$$
$$\therefore x = 11$$

Question 106

As per given figure $\mathbf{A, B}$ and C are the first, second and third excited energy level of hydrogen atom respectively. If the ratio of the two wavelengths (i.e. $\frac{\lambda_1}{\lambda_2}$) is $\frac{7}{4n}$, then the value of $\boldsymbol{n}$ will be

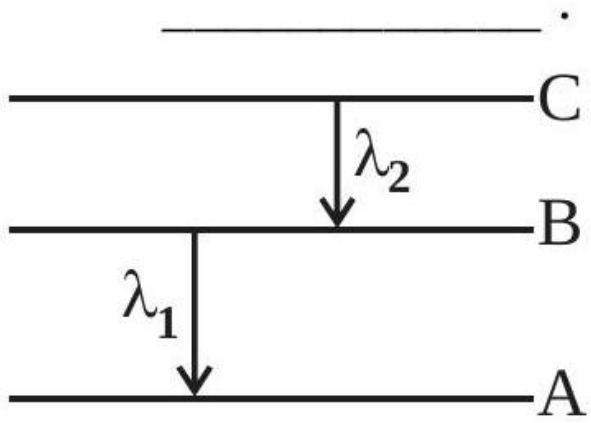

Numerical answer: _____

Enter the requested value (an integer; 0 decimal places). Use the units and scaling stated in the question.

Correct answer: 5

Source solution

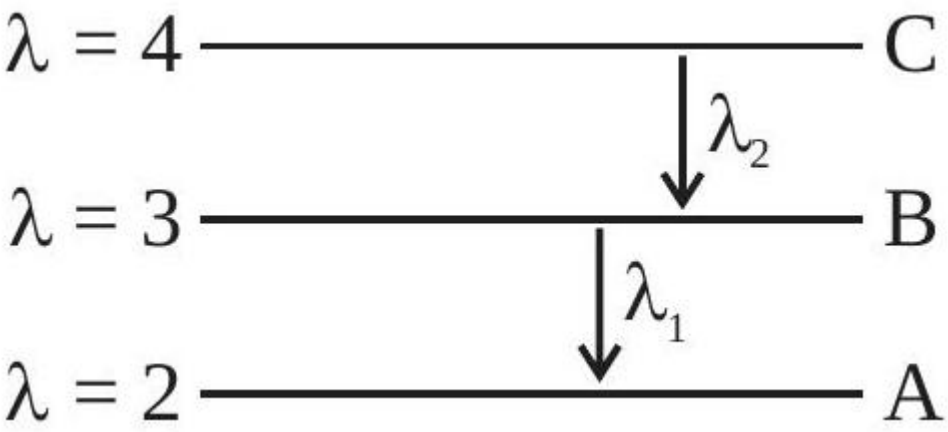

As $\frac{1}{\lambda} = \mathbf{RZ^2}\left[\frac{1}{n_1^2} - \frac{1}{n_2^2}\right]$

$$\frac{1}{\lambda_1} = \mathrm{R}(1)^2\left[\frac{1}{(2)^2} - \frac{1}{(3)^2}\right] = \mathrm{R}\left(\frac{5}{36}\right) \quad \text{(i)}$$

$$\&\frac{1}{\lambda_2} = \mathrm{R}(1)^2\left[\frac{1}{(3)^2} - \frac{1}{(4)^2}\right] = \mathrm{R}\left(\frac{7}{144}\right) \quad \text{(ii)}$$

(ii) $\div$ (i) gives
$\frac{\lambda_1}{\lambda_2} = \frac{7/144}{5/36} = \frac{7}{20} = \frac{7}{4\times5}$
$\therefore \mathrm{n} = 5$

Question 107

A monochromatic light is incident on a hydrogen sample in ground state. Hydrogen atoms absorb a fraction of light and subsequently emit radiation of six different wavelengths. The frequency of incident light is $\mathbf{x} \times 10^{15}\ \mathbf{Hz}$. The value of x is

. (Given $\mathbf{h} = 4.25 \times 10^{-15}\mathbf{eVs}$)

Numerical answer: _____

Enter the requested value (an integer; 0 decimal places). Use the units and scaling stated in the question.

Correct answer: 3

Source solution

$6 = {}^4\mathrm{C}_2 \quad \Rightarrow \mathrm{n}_2 = 4$
$\mathrm{h}\nu = \mathrm{E}_4 - \mathrm{E}_1$
$\therefore v = 13.6\left(\frac{1}{1^2} - \frac{1}{4^2}\right) \times \frac{1}{4.25\times10^{-15}}$
$= 3 \times 10^{15}\ \mathrm{Hz}$

Question 108

A fringe width of 6 mm was produced for two slits separated by 1 mm apart. The screen is placed 10 m away. The wavelength of light used is ' x ' nm . The value of ' x ' to the nearest integer is .

Numerical answer: _____

Enter the requested value (an integer; 0 decimal places). Use the units and scaling stated in the question.

Correct answer: 600

Source solution

$\beta = \frac{\lambda D}{d}$
$\lambda = \frac{\beta d}{D}$
$\lambda = \frac{6 \times 10^{-3} \times 10^{-3}}{10}$
$\lambda = 6 \times 10^{-7}\ \mathrm{m} = 600 \times 10^{-9}\ \mathrm{m}$
$\lambda = 600\ \mathrm{nm}$

Question 109

Monochromatic light of wavelength 500 nm is used in Young's double slit experiment. An interference pattern is obtained on a screen When one of the slits is covered with a very thin glass plate (refractive index $= 1.5$), the central maximum is shifted to a position previously occupied by the 4th bright fringe. The thickness of the glass-plate is

$\mu\mathrm{m}$.

Numerical answer: _____

Enter the requested value (an integer; 0 decimal places). Use the units and scaling stated in the question.

Correct answer: 4

Source solution

$(\mu - 1)\mathrm{t} = \mathrm{n}\lambda$
$(1.5 - 1)\mathrm{t} = 4 \times 500 \times 10^{-9}\ \mathrm{m}$
$\mathrm{t} = 4000 \times 10^{-9}\ \mathrm{m}$
$\mathrm{t} = 4\mu\ \mathrm{m}$

Question 110

In a YDSE interference pattern obtained with light of wavelength $\lambda_1 = 500\ \text{nm}, 15$ fringes are obtained on a certain segment of screen. If number of fringes for light of wavelength λ_2 on same segment of screen is 10 , then the value of λ_2 (in nm) is

Numerical answer: _____

Enter the requested value (an integer; 0 decimal places). Use the units and scaling stated in the question.

Correct answer: 750

Source solution

(750)
If the length of the segment is y ,
Then $y = n\beta$
$n =$ no. of fringes,
$\beta =$ fringe width
$15 \times 500 \times \frac{D}{d} = 10 \times \lambda_2 \times \frac{D}{d}$

$$\lambda_2 = 15 \times 50\ \text{nm}$$
$$\lambda_2 = 750\ \text{nm}$$

Question 111

In a Young's double slit experiment, an angular width of the fringe is 0.35° on a screen placed at 2 m away for particular wavelength of 450 nm . The angular width of the fringe, when whole system is immersed in a medium of refractive index $7/5$, is $\frac{1}{\alpha}$. The value of α is

Numerical answer: _____

Enter the requested value (an integer; 0 decimal places). Use the units and scaling stated in the question.

Correct answer: 4

Source solution

$\beta = \frac{0.35 \times 5}{7} = 0.25$

$\frac{1}{\alpha} = \frac{25}{100}$

$\alpha = 4$

Question 112

In a Young's double slit experiment, the intensities at two points, for the path differences $\frac{\lambda}{4}$ and $\frac{\lambda}{3}$ (λ being the wavelength of light used) are I_1 and I_2 respectively. If I_0 denotes the intensity produced by each one of the individual slits, then $\frac{I_1+I_2}{I_0} =$.

Numerical answer: _____

Enter the requested value (an integer; 0 decimal places). Use the units and scaling stated in the question.

Correct answer: 3

Source solution

$I = 4I_0 \cos^2 \frac{\phi}{2}$

$\Delta\phi = \frac{2\pi}{\lambda} \times \Delta x$

$I_1 = 4I_0 \cos^2 \frac{\pi}{4} = 2I_0$

$I_2 = 4I_0 \cos^2 \frac{2\pi}{3} = I_0$

$\Rightarrow \frac{I_1+I_2}{I_0} = 3$

Ans: (3)

Question 113

Two wavelengths λ_1 and λ_2 are used in Young's double slit experiment $\lambda_1 = 450\ \text{nm}$ and $\lambda_2 = 650\ \text{nm}$. The minimum order of fringe produced by λ_2 which overlaps with the fringe produced by λ_1 is n . The value of n is .

Numerical answer: _____

Enter the requested value (an integer; 0 decimal places). Use the units and scaling stated in the question.

Correct answer: 9

Source solution

$n_2\lambda_2 = n_1\lambda_1$
$\frac{n_2}{n_1} = \frac{\lambda_1}{\lambda_2} = \frac{450}{650} = \frac{9}{13}$
$n_2 = 9$

Question 114

In a Young's double slit experiment, a laser light of 560 nm produces an interference pattern with consecutive bright fringes' separation of 7.2 mm . Now another light is used to produce an interference pattern with consecutive bright fringes' separation of 8.1 mm . The wavelength of second light is nm.

Numerical answer: _____

Enter the requested value (an integer; 0 decimal places). Use the units and scaling stated in the question.

Correct answer: 630

Source solution

$\beta \propto \lambda$
$\lambda_2 = \frac{9}{8}\lambda_1$
$\therefore \beta_2 = \frac{9}{8}\beta_1 = \frac{9}{8} \times 560 = 630\ \text{nm}.$

Question 115

In Young's double slit experiment, carried out with light of wavelength $5000\AA$, the distance between the slits is 0.3 mm and the screen is at 200 cm from the slits. The central maximum is at $x = 0$ cm. The value of x for third maxima is mm .

Numerical answer: _____

Enter the requested value (an integer; 0 decimal places). Use the units and scaling stated in the question.

Correct answer: 10

Source solution

$\beta = \frac{\lambda D}{d} = \frac{5\times10^{-7}\times2}{3\times10^{-4}} = \frac{10\times10^{-3}}{3}$ m
For 3rd maxima $y_3 = 3\beta = 10 \times 10^{-3}$ m $= 10$ mm

Question 116

In a double slit experiment with monochromatic light, fringes are obtained on a screen placed at some distance from the plane of slits. If the screen is moved by 5×10^{-2} m towards the slits, the change in fringe width is 3×10^{-3} cm. If the distance between the slits is 1 mm , then the wavelength of the light will be nm.

Numerical answer: _____

Enter the requested value (an integer; 0 decimal places). Use the units and scaling stated in the question.

Correct answer: 600

Source solution

$\beta = \frac{\lambda D}{d}$
$\Delta\beta = \frac{\lambda}{d}\Delta D$
$\lambda = \frac{\Delta\beta\cdot d}{\Delta D}$
$= \frac{3\times10^{-5}\times1\times10^{-3}}{5\times10^{-2}}$
$= 60 \times 10^{-8} = 600 \times 10^{-9}$ m
$= 600$ nm

Question 117

A parallel beam of monochromatic light of wavelength $5000\AA$ is incident normally on a single narrow slit of width 0.001 mm . The light is focused by convex lens on screen, placed on its focal plane. The first minima will be formed for the angle of diffraction of (degree).

Numerical answer: _____

Enter the requested value (an integer; 0 decimal places). Use the units and scaling stated in the question.

Correct answer: 30

Source solution

For first minima

$a \sin\theta = \lambda$

$\Rightarrow \sin\theta = \frac{\lambda}{a} = \frac{5000\times10^{-10}}{1\times10^{-6}} = \frac{1}{2}$

$\Rightarrow \theta = 30^\circ$

Question 118

A beam of light consisting of two wavelengths $7000\AA$ and $5500\AA$ is used to obtain interference pattern in Young's double slit experiment. The distance between the slits is 2.5 mm and the distance between the plane of slits and the screen is 150 cm . The least distance from the central fringe, where the bright fringes due to both the wavelengths coincide, is $\mathrm{n} \times 10^{-5}$ m. The value of n is .

Numerical answer: _____

Enter the requested value (an integer; 0 decimal places). Use the units and scaling stated in the question.

Correct answer: 462

Source solution

$\mathrm{d}=2.5 \mathrm{~mm}, \mathrm{D}=150 \mathrm{~cm}$
Fringe width $\beta=\frac{\lambda D}{d}$
Let n^{th} bright tringle of λ_1 match with m^{th} bright triangle of λ_2
$\Rightarrow n \beta_1=m \beta_2$
$\Rightarrow n \lambda_1=m \lambda_2 \Rightarrow \frac{n}{m}=\frac{\lambda_2}{\lambda_1}=\frac{5500}{7000}$
$\Rightarrow \frac{n}{m}=\frac{11}{14}$
Distance where bright fringe will match
$=n \beta_1=\frac{11 \times 7000 A^0 \times 150 \mathrm{~cm}}{0.25 \mathrm{~cm}}$
$=462 \times 10^{-5}$

Question 119

In a single slit diffraction pattern, a light of wavelength $6000\AA$ is used. The distance between the first and third minima in the diffraction pattern is found to be 3 mm when the screen in placed 50 cm away from slits. The width of the slit is $\times 10^{-4}$ m.

Numerical answer: _____

Enter the requested value (an integer; 0 decimal places). Use the units and scaling stated in the question.

Correct answer: 2

Source solution

For n^{th} minima $b \sin\theta = n\lambda$

(λ is small so $\sin\theta$ is small, hence $\sin\theta \simeq \tan\theta$) $b\tan\theta = n\lambda$

$b\frac{y}{D} = n\lambda$

$\Rightarrow y_n = \frac{n\lambda D}{b}$ (Position of nth minima)

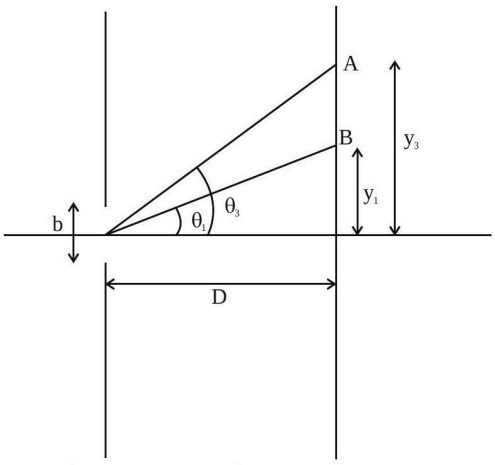

$B \rightarrow 1^{st}$ minima, $A \rightarrow 3^{rd}$ minima

$y_3 = \frac{3\lambda D}{b}, y_1 = \frac{\lambda D}{b}$

$\Delta y = y_3 - y_1 = \frac{2\lambda D}{b}$

$3 \times 10^{-3} = \frac{2\times 6000\times 10^{-10}\times 0.5}{b}$

$b = \frac{2\times 6000\times 10^{-10}\times 0.5}{3\times 10^{-3}}$

$b = 2 \times 10^{-4}$ m

$x = 2$

Question 120

In Young's double slit experiment, monochromatic light of wavelength $5000\AA$ is used. The slits are 1.0 mm apart and screen is placed at 1.0 m away from slits. The distance from the centre of the screen where intensity becomes half of the maximum intensity for the first time is $\times 10^{-6}$ m.

Numerical answer: _____

Enter the requested value (an integer; 0 decimal places). Use the units and scaling stated in the question.

Correct answer: 125

Source solution

Let intensity of light on screen due to each slit is I_0 So internity at centre of screen is $4I_0$ Intensity at distance y from centre-

$I = I_0 + I_0 + 2\sqrt{I_0 I_0}\cos\phi$

$I_{max} = 4I_0$

$\frac{I_{max}}{2} = 2I_0 = 2I_0 + 2I_0\cos\phi$

$\cos\phi = 0$

$\phi = \frac{\pi}{2}$

$K\Delta x = \frac{\pi}{2}$

$\frac{2\pi}{\lambda} d\sin\theta = \frac{\pi}{2}$

$\frac{2}{\lambda} d \times \frac{y}{D} = \frac{1}{2}$

$y = \frac{\lambda D}{4d} = \frac{5\times10^{-7}\times1}{4\times10^{-3}}$

$= 125 \times 10^{-6}$

$= 125$

Question 121

In Young's double slit experiment the two slits are 0.6 mm distance apart. Interference pattern is observed on a screen at a distance 80 cm from the slits. The first dark fringe is observed on the screen directly opposite to one of the slits. The wavelength of light will be nm.

Numerical answer: _____

Enter the requested value (an integer; 0 decimal places). Use the units and scaling stated in the question.

Correct answer: 450

Source solution

$d = 0.6 \times 10^{-3}$
$D = 80 \times 10^{-2}$
1st Dark fringe $= \frac{D\lambda}{2d} = \frac{d}{2}, \quad \lambda = \frac{d^2}{D}$
$= 450 \times 10^{-9}\ \mathrm{m}$

Question 122

As shown in the figure, in Young's double slit experiment, a thin plate of thickness $t = 10\mu\ \mathrm{m}$ and refractive index $\mu = 1.2$ is inserted infront of slit S_1. The experiment is conducted in air ($\mu = 1$) and uses a monochromatic light of wavelength $\lambda = 500\ \mathrm{nm}$. Due to the insertion of the plate, central maxima is shifted by a distance of $x\beta_0$. β_0 is the fringe-width befor the insertion of the plate. The value of the x is .

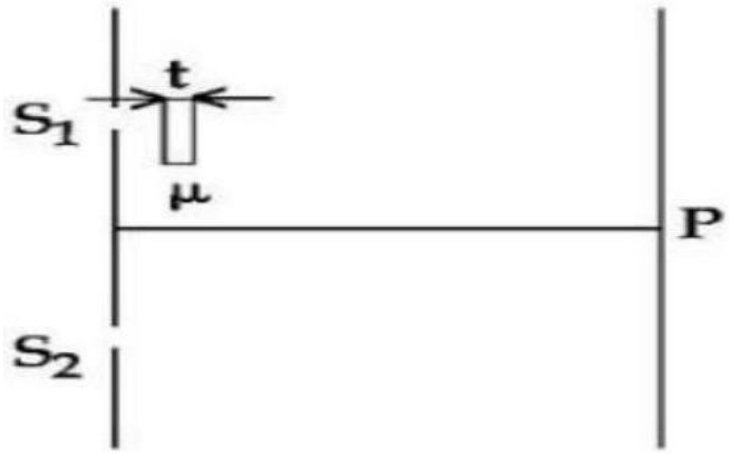

Numerical answer: _____

Enter the requested value (an integer; 0 decimal places). Use the units and scaling stated in the question.

Correct answer: 4

Source solution

Given $\mathrm{t} = 10 \times 10^{-6}\ \mathrm{m}$
$\mu = 1.2$
$\lambda = 500 \times 10^{-9}\ \mathrm{m}$
When the glass slab inserted infront of one slit then the shift of central fringe is obtained by

$$t = \frac{n\lambda}{(\mu - 1)}$$
$$\Rightarrow \quad 10 \times 10^{-6} = \frac{n \times 500 \times 10^{-9}}{(1.2 - 1)}$$
$$10 \times 10^{-6} = \frac{n \times 500 \times 10^{-9}}{0.2}$$
$$n = 4$$

Question 123

In a double slit experiment shown in figure, when light of wavelength 400 nm is used, dark fringe is observed at P . If $\mathbf{D = 0.2\ m}$ the minimum distance between the slits S_1 and S_2 is mm .

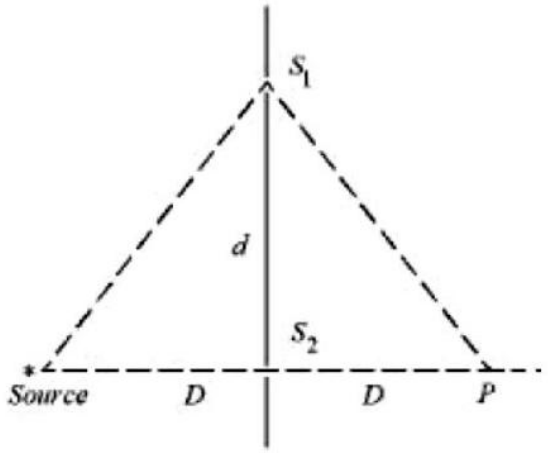

Numerical answer: _____

Enter the requested value to 1 decimal places. Use the units and scaling stated in the question.

Correct answer: 0.2

Source solution

Path difference for minima at P

$2\sqrt{D^2 + d^2} - 2D = \frac{\lambda}{2}$

$\therefore \sqrt{D^2 + d^2} - D = \frac{\lambda}{4}$

$\therefore \sqrt{D^2 + d^2} = \frac{\lambda}{4} + D$

$\Rightarrow D^2 + d^2 = D^2 + \frac{\lambda^2}{16} + \frac{D\lambda}{2}$

$\Rightarrow d^2 = \frac{D\lambda}{2} + \frac{\lambda^2}{16}$

$\Rightarrow d^2 = \frac{0.2 \times 400 \times 10^{-9}}{2} + \frac{4 \times 10^{-14}}{4}$

$\Rightarrow d^2 \approx 400 \times 10^{-10}$

$\therefore d = 20 \times 10^{-5}$

$\Rightarrow d = 0.20\ mm$

Question 124

Two slits are 1 mm apart and the screen is located 1 m away from the slits. A light wavelength 500 nm is used. The width of each slit to obtain 10 maxima of the double slit pattern within the central maximum of the single slit pattern is $\ldots\ldots\ldots\times 10^{-4}\ \mathrm{m}$.

Numerical answer: _____

Enter the requested value (an integer; 0 decimal places). Use the units and scaling stated in the question.

Correct answer: 2

Source solution

$\mathrm{d}=1\ \mathrm{mm}, \mathrm{D}=1\ \mathrm{m}, \lambda=500\ \mathrm{nm}$

$10\left(\frac{\lambda \mathrm{D}}{\mathrm{d}}\right)=\frac{2\lambda \mathrm{D}}{\mathrm{a}}$

$\mathrm{a}=\frac{\mathrm{d}}{5}$

$$=\frac{10\times 10^{-4}\ \mathrm{m}}{5}$$
$$=2\times 10^{-4}$$

Question 125

White light is passed through a double slit and interference is observed on a screen 1.5 m away. The separation between the slits is 0.3 mm . The first violet and red fringes are formed 2.0 mm and 3.5 mm away from the central white fringes. The difference in wavelengths of red and voilet light is
nm.

Numerical answer: _____

Enter the requested value (an integer; 0 decimal places). Use the units and scaling stated in the question.

Correct answer: 300

Source solution

Position of bright fringe $\mathbf{y = n\frac{D\lambda}{d}}$
$\mathbf{y_1}$ of red $= \frac{\mathrm{D}\lambda_r}{\mathrm{d}} = \mathbf{3.5\ mm}$
$\boldsymbol{\lambda_r = 3.5 \times 10^{-3}\frac{d}{D}}$
Similarly $\boldsymbol{\lambda_v = 2 \times 10^{-3}\frac{d}{D}}$
$\boldsymbol{\lambda_r - \lambda_v = \left(1.5 \times 10^{-3}\right)\left(\frac{0.3\times10^{-3}}{1.5}\right)}$
$\boldsymbol{= 3 \times 10^{-7} = 300\ nm}$
Ans. 300.0

Question 126

If Rydberg's constant is R, the longest wavelength of radiation in Paschen series will be $\frac{\alpha}{7R}$, where $\alpha =$.

Numerical answer: _____

Enter the requested value (an integer; 0 decimal places). Use the units and scaling stated in the question.

Correct answer: 144

Source solution

Longest wavelength corresponds to transition between $\mathbf{n = 3}$ and $\mathbf{n = 4}$

$\frac{1}{\lambda} = \mathrm{RZ}^2\left(\frac{1}{3^2} - \frac{1}{4^2}\right) = \mathrm{RZ}^2\left(\frac{1}{9} - \frac{1}{16}\right)$

$= \frac{7\mathrm{RZ}^2}{9\times16}$

$\Rightarrow \lambda = \frac{144}{7R}$ for $\mathrm{Z} = 1 \quad \therefore \alpha = 144$

Question 127

In a single slit experiment, a parallel beam of green light of wavelength 550 nm passes through a slit of width 0.20 mm . The transmitted light is collected on a screen 100 cm away. The distance of first order minima from the central maximum will be $\mathbf{x} \times 10^{-5}\ \mathbf{m}$. The value of x is :

Numerical answer: _____

Enter the requested value (an integer; 0 decimal places). Use the units and scaling stated in the question.

Correct answer: 275

Source solution

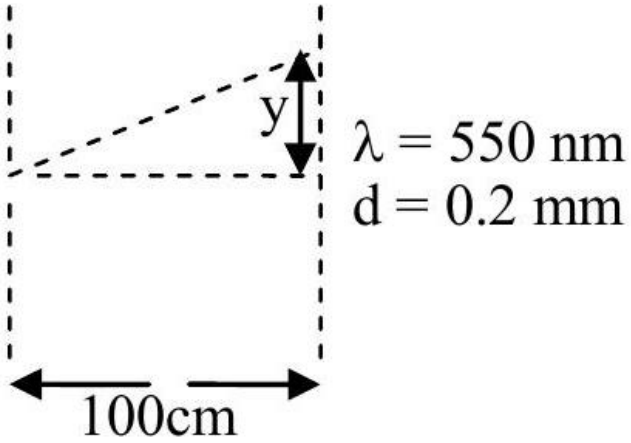

$$y = \frac{\lambda D}{d} = \frac{550\times10^{-9}\times100\times10^{-2}}{0.2\times10^{-3}} = 275$$

Electric Charges and Fields

Questions 128-136 / 9 selected / 3.0% practice weight / Next

Question 128

Two small spheres each of mass 10 mg are suspended from a point by threads 0.5 m long. They are equally charged and repel each other to a distance of 0.20 m . Then charge on each of the sphere is $\frac{a}{21} \times 10^{-8}\mathrm{C}$. The value of 'a' will be .

Numerical answer: _____

Enter the requested value (an integer; 0 decimal places). Use the units and scaling stated in the question.

Correct answer: 20

Source solution

20

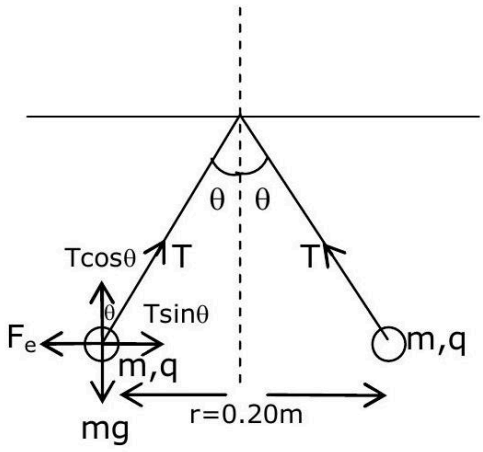

$\mathrm{T}\sin\theta = \frac{\mathrm{kq}^2}{\mathrm{r}^2}$
$\mathrm{T}\cos\theta = \mathrm{mg}$
$\tan\theta = \frac{\mathrm{kq}^2}{\mathrm{mgr}^2}$
$\mathrm{q}^2 = \frac{\tan\theta \mathrm{mgr}^2}{\mathrm{k}}$
$\because \tan\theta = \frac{0.1}{0.5} = \frac{1}{5}$
$\mathrm{q}^2 = \frac{1}{5} \times \frac{10\times10^{-6}\times10\times0.2\times0.2}{9\times10^9}$
$\mathrm{q} = \frac{2\sqrt{2}}{3} \times 10^{-8}$

after comparison from the given equation

$\mathbf{a = 20}$

Question 129

A charge particle of mass m and charge q is released from rest in uniform electric fiel(4) Its graph between velocity (v) and distance (x) will be :

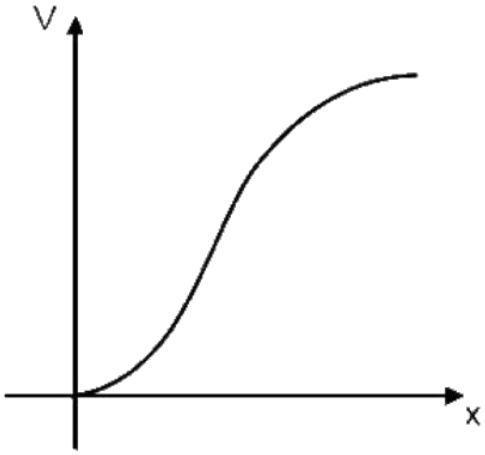

A.

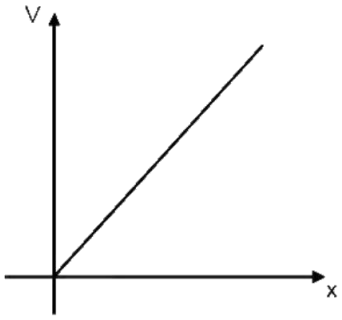

B.

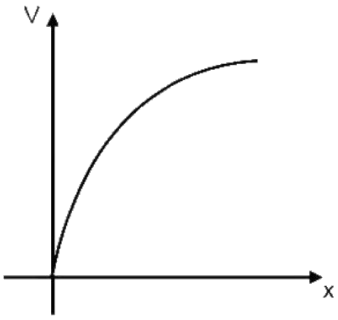

C.

D.

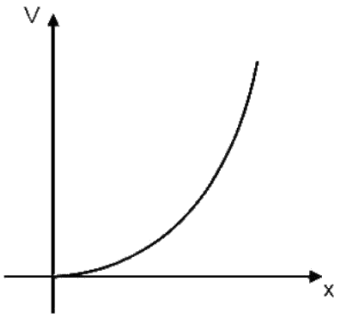

Correct answer: B

Source solution

Sol. Applying the work-energy theorem,

$$qEx = \frac{1}{2}mv^2 \quad \Rightarrow \quad v^2 \propto x$$

Hence, the answer will be option (2).

Question 130

A proton is moving undeflected in a region of crossed electric and magnetic fields at a constant speed of $2 \times 10^5\ \mathrm{ms}^{-1}$. When the electric field is switched off, the proton moves along a circular path of radius 2 cm . The magnitude of electric field is $x \times 10^4\ \mathrm{N/C}$. the value of x is .
Take the mass of the proton $= 1.6 \times 10^{-27}\ \mathrm{kg}$.

Numerical answer: _____

Enter the requested value (an integer; 0 decimal places). Use the units and scaling stated in the question.

Correct answer: 2

Source solution

For uniform speed $V = \frac{E}{B}$

$\mathrm{R} = \frac{\mathrm{mV}}{\mathrm{eB}}$

$= \frac{mV^2}{eE}$

$\Rightarrow \mathrm{E} = \frac{\mathrm{mV}^2}{\mathrm{eR}}$

$= \frac{1.6 \times 10^{-27} \times 4 \times 10^{10}}{1.6 \times 10^{-19} \times 2 \times 10^{-2}}$

$= 2 \times 10^4\ \mathrm{N/C}.$

Question 131

Two uniformly charged spherical conductors A and B of radii 5 mm and 10 mm are separated by a distance of 2 cm . If the spheres are connected by a conducting wire, then in equilibrium condition, the ratio of the magnitudes of the electric fields at the surface of the sphere A and B will be :

A. $1:2$

B. $2:1$

C. $1:1$

D. $1:4$

Correct answer: B

Source solution

$$V_A = V_B$$

$$\frac{KQ_A}{R_A} = \frac{KQ_B}{R_B}$$
$$\frac{Q_A}{Q_B} = \frac{R_A}{R_B} = \frac{1}{2}$$

$$E_A = \frac{KQ_A}{R_A^2}, \qquad E_B = \frac{KQ_B}{R_B^2}$$

$$\frac{E_A}{E_B} = \frac{Q_A}{Q_B} \cdot \frac{R_B^2}{R_A^2} = \frac{R_A}{R_B} \cdot \frac{R_B^2}{R_A^2} = \frac{R_B}{R_A} = \frac{2}{1}$$

$$\boxed{\frac{E_A}{E_B} = 2}$$

Question 132

A particle of mass 1 mg and charge q is lying at the mid-point of two stationary particles kept at distance '2 m' when each is carrying same charge 'q'. If the free charged particle is displaced from its equilibrium position through distance 'x' $(\mathbf{x \ll 1\ m})$. The particle executes SHM. Its angular frequency of oscillation will be ___ $\times 10^5 \mathbf{rad/s}$ if $\mathbf{q^2 = 10C^2}$

Numerical answer: _____

Enter the requested integer (0 decimal places).

Correct answer: 6

Source solution

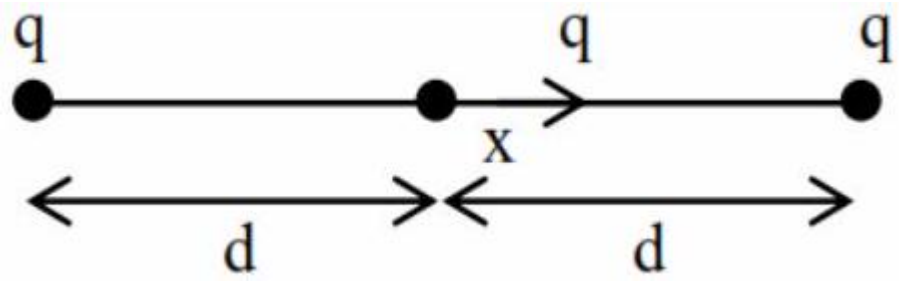

Net force on free charged particle

$$\mathbf{F = \frac{kq^2}{(d+x)^2} - \frac{kq^2}{(d-x)^2}}$$

$$\mathbf{F = -kq^2\left[\frac{4dx}{\left(d^2-x^2\right)^2}\right]}$$

$$\mathbf{a = -\frac{4kq^2\,d}{m}\left(\frac{x}{d^4}\right)}$$

$$\mathbf{a = -\left(\frac{4kq^2}{md^3}\right)x}$$

So, angular frequency

$$\omega = \sqrt{\frac{4kq^2}{md^3}}$$

$$\omega = \sqrt{\frac{4 \times 9 \times 10^9 \times 10}{1 \times 10^{-6} \times 1^3}}$$

$$\omega = 6 \times 10^8 \mathrm{rad/sec}$$

Question 133

A uniform electric field of $10\ \mathrm{N/C}$ is created between two parallel charged pates (as shown in figure). An electron enters the field symmetrically between the plates with a kinetic energy 0.5 eV . The length of each pate is 10 cm . The angle (θ) of deviation of the path of electron as it comes out of the field is (in degree).

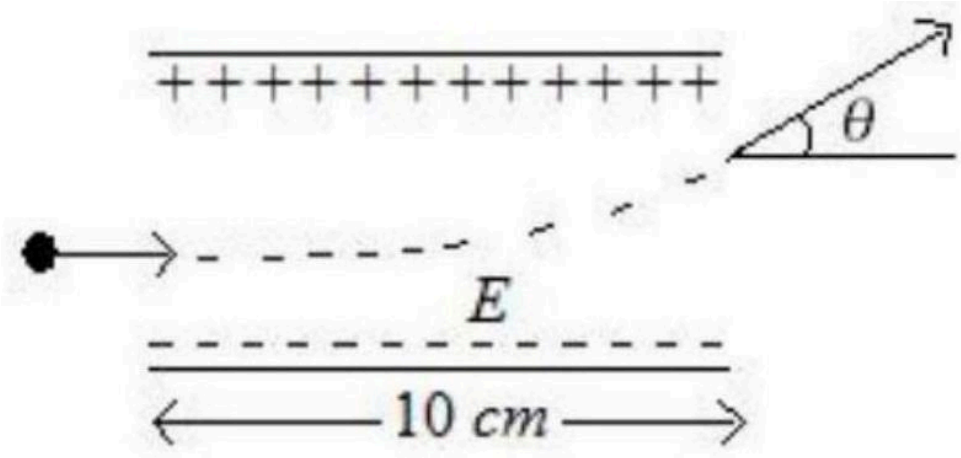

Numerical answer: _____

Enter the requested value (an integer; 0 decimal places). Use the units and scaling stated in the question.

Correct answer: 45

Source solution

45^0

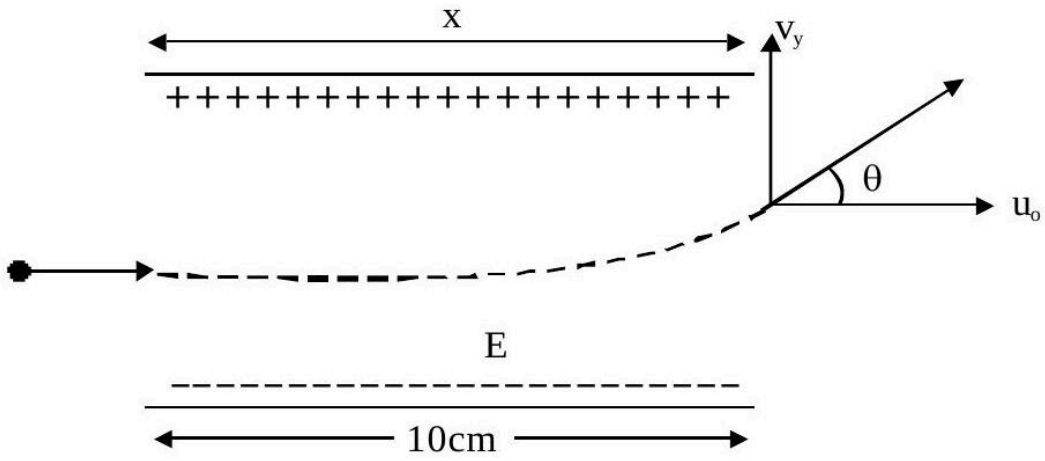

Force due to electric field is given by $\vec{F} = q\vec{E}$

$\therefore F = eE$

$\Rightarrow a = \frac{eE}{m}$

The electron will take a parabolic path i.e., projectile motion.

Here, $s_x = 10\ \text{cm} = 0.1\ \text{m}$

$\therefore t = \frac{0.1}{u_x} - - - - (i)$

Now $v_y = u_y + a_y t$

$$\Rightarrow v_y = 0 + \frac{eE}{m} \times \frac{0.1}{u_x} \quad \text{(ii)}$$

Also $KE = \frac{1}{2}mv^2 = \frac{1}{2}mu_x^2$

$mu_x^2 = 2 \times KE = 2 \times 0.5e = e - - - -$ (iii)

From eq (i),(ii) and (iii), $\tan\theta = \frac{v_y}{u_x} = \frac{eE}{m} \times \frac{0.1}{u_x} \times \frac{1}{u_x} = \frac{0.1eE}{mu_x^2} = \frac{0.1eE}{e} = 0.1 \times 10 = 1$

$\Rightarrow \tan\theta = 1$

$\therefore \theta = 45^0$

Question 134

Three infinitely long charged thin sheets are placed as shown in figure. The magnitude of electric field at the point P is $\frac{x\sigma}{\epsilon_0}$. The value of x is (all quantities are measured in SI units).

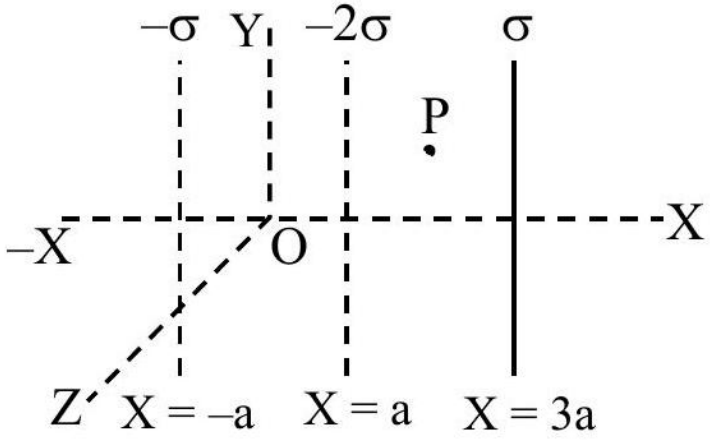

Numerical answer: _____

Enter the requested value (an integer; 0 decimal places). Use the units and scaling stated in the question.

Correct answer: 2

Source solution

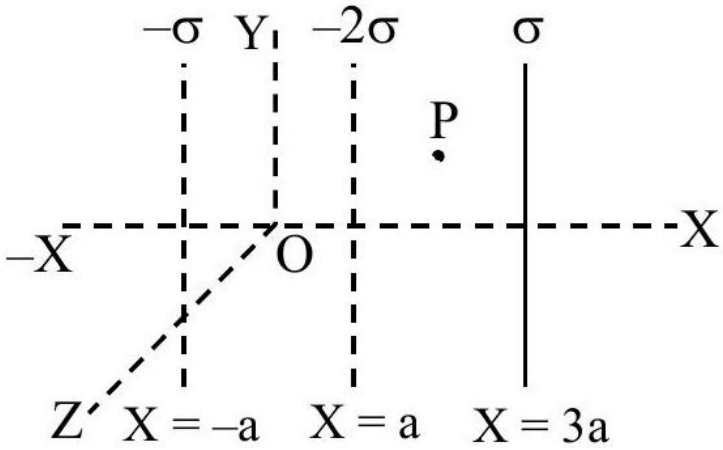

$$\vec{E}_p = \left(\frac{\sigma}{2\varepsilon_0} + \frac{2\sigma}{2\varepsilon_0} + \frac{\sigma}{2\varepsilon_0}\right)(-\hat{i})$$
$$= -\frac{2\sigma}{\varepsilon_0}\hat{i}$$

Question 135

Two charges q and 3 q are separated by a distance ' r ' in air. At a distance x from charge q, the resultant electric field is zero. The value of x is :

A. $\frac{(1+\sqrt{3})}{r}$

B. $\frac{r}{3(1+\sqrt{3})}$

C. $\frac{r}{(1+\sqrt{3})}$

D. $r(1+\sqrt{3})$

Correct answer: C

Source solution

Sol. $\left(\vec{E}_{net}\right)_P = 0$

$$\frac{kq}{x^2} = \frac{k \cdot 3q}{(r-x)^2}$$

$$(r-x)^2 = 3x^2$$

$$r - x = \sqrt{3}x$$

$$x = \frac{r}{\sqrt{3}+1}$$

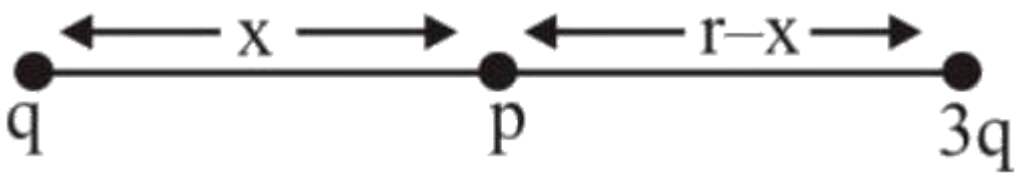

Question 136

Match List-I with List-II.

List-I	List-II
(A) Electric field inside (r > 0) of a uniformly charged spherical shell	(III) 0
(B) Electric field at distance r > 0 from a uniformly charged infinite plane sheet	(II) $\frac{\sigma}{2\varepsilon_0}$
(C) Electric field outside (r > 0) of a uniformly charged spherical shell	(IV) $\frac{\sigma}{\varepsilon_0 r^2}$
(D) Electric field between two oppositely charged infinite plane parallel sheets	(I) $\frac{\sigma}{\varepsilon_0}$

Choose the correct answer from the options given below:

A. (A)-(IV), (B)-(I), (C)-(III), (D)-(II)

B. (A)-(IV), (B)-(II), (C)-(III), (D)-(I)

C. (A)-(II), (B)-(I), (C)-(IV), (D)-(III)

D. (A)-(III), (B)-(II), (C)-(IV), (D)-(I)

Correct answer: D

Source solution

(A) Electric field inside a uniformly charged spherical shell

By Gauss's law,

$$E = 0$$

for all points inside the shell.

$$\boxed{(A) \rightarrow (III)}$$

\vspace{0.2cm}

(B) Electric field due to an infinite plane sheet of charge

$$E = \frac{\sigma}{2\varepsilon_0}$$

which is independent of the distance from the sheet.

$$\boxed{\text{(B)} \rightarrow \text{(II)}}$$

\vspace{0.2cm}

(C) Electric field outside a uniformly charged spherical shell

The shell behaves like a point charge.

$$E = \frac{1}{4\pi\varepsilon_0}\frac{Q}{r^2}$$

Since

$$Q = 4\pi R^2\sigma,$$

$$E = \frac{\sigma R^2}{\varepsilon_0 r^2} \propto \frac{\sigma}{\varepsilon_0 r^2}$$

$$\boxed{\text{(C)} \rightarrow \text{(IV)}}$$

\vspace{0.2cm}

(D) Electric field between two oppositely charged infinite parallel sheets

The fields due to the two sheets add up:

$$E = \frac{\sigma}{2\varepsilon_0} + \frac{\sigma}{2\varepsilon_0} = \frac{\sigma}{\varepsilon_0}$$

$$\boxed{(\mathrm{D}) \rightarrow (\mathrm{I})}$$

Therefore,

$$\boxed{(A) \rightarrow (III), \quad (B) \rightarrow (II), \quad (C) \rightarrow (IV), \quad (D) \rightarrow (I)}$$

Electrostatic Potential and Capacitance

Questions 137-139 / 3 selected / 1.0% practice weight / Consolidate

Question 137

A parallel plate capacitor consisting of two circular plates of radius 10 cm is being charged by a constant current of 0.15 A . If the rate of change of potential difference between the plates is $7 \times 10^8\ \mathrm{V/s}$ then the integer value of the distance between the parallel plates is -
(Take, $\epsilon_0 = 9 \times 10^{-12} \frac{\mathrm{F}}{\mathrm{m}}, \pi = \frac{22}{7}$) $\mu\mathrm{m}$.

Numerical answer: _____

Enter the requested value (an integer; 0 decimal places). Use the units and scaling stated in the question.

Correct answer: 1320

Source solution

$$V = \frac{Q}{C} = \frac{it}{\left(\frac{\epsilon_0 A}{d}\right)} = \frac{itd}{\epsilon_0(\pi r^2)}$$

$$\Rightarrow \mathrm{d} = \frac{\epsilon_0(\pi r^2)}{\mathrm{i}}\left(\frac{\mathrm{v}}{\mathrm{t}}\right)$$

$$= \frac{\left(9\times10^{-12}\right)\left(\frac{22}{7}\right)(0.1)^2}{0.15}\left(7 \times 10^8\right)\mathrm{m}$$

$$\mathrm{d} = 1320\mu\ \mathrm{m}$$

Question 138

An ac source is connected in given series LCR circuit. The rms potential difference across the capacitor of $20\mu\,\mathrm{F}$ is V.

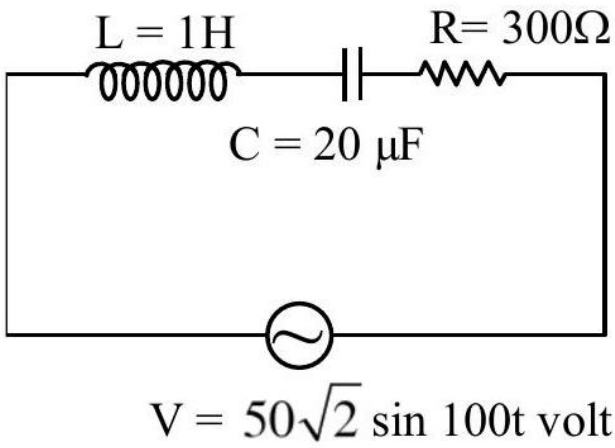

Numerical answer: _____

Enter the requested value (an integer; 0 decimal places). Use the units and scaling stated in the question.

Correct answer: 50

Source solution

$\mathrm{X_L} = \omega \mathrm{L} = 100 \times 1 = 100\Omega$

$\mathrm{X_C} = \frac{1}{\omega \mathrm{C}} = \frac{1}{100 \times 20 \times 10^{-6}} = 500\Omega$

$\mathrm{Z} = \sqrt{(\mathrm{X_L} - \mathrm{X_C})^2 + \mathrm{R}^2}$

$\sqrt{(100 - 500)^2 + 300^2}$

$\mathrm{Z} = 500\Omega$

$\mathrm{i_{rms}} = \frac{\mathrm{V_{rms}}}{\mathrm{Z}} = \frac{50}{500} = 0.1\ \mathrm{A}$

rms voltage across capacitor

$\mathrm{V_{rms}} = \mathrm{X_C i_{rms}}$

$= 500 \times 0.1 = 50\ \mathrm{V}$

Question 139

An alternating emf $\mathbf{E = 110\sqrt{2}\sin 100t}$ volt is applied to a capacitor of $\mathbf{2\mu\ F}$, the rms value of current in the circuit is mA .

Numerical answer: _____

Enter the requested value (an integer; 0 decimal places). Use the units and scaling stated in the question.

Correct answer: 22

Source solution

$C = 2\mu f; \quad E = 110\sqrt{2}\sin(100t)$

$\mathbf{X_C = \frac{1}{\omega c} = \frac{1}{100\times 2\times 10^6}}$

$\mathbf{= \frac{10000}{2} = 5000\Omega}$

$\mathbf{i_o = \frac{110\sqrt{2}}{5000}}$

$\mathbf{i_{rms} = \frac{110\sqrt{2}}{5000\sqrt{2}}}$

$\mathbf{= \frac{110}{5}\ mA}$

$\mathbf{= 22\ mA}$

Current Electricity

Questions 140-164 / 25 selected / 8.3% practice weight / Focus first

Question 140

A resistance is shown in the figure. Its value and tolerance are given respectively by:

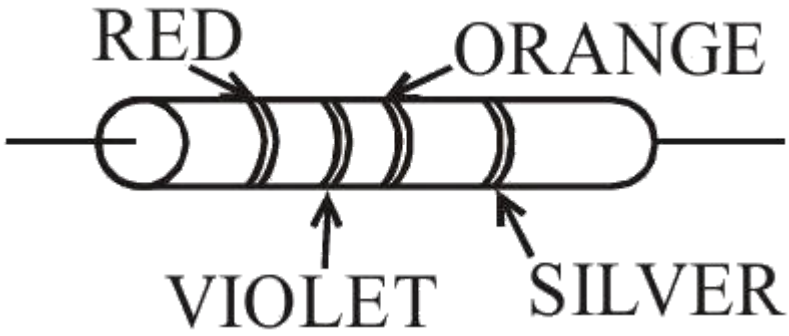

A. $27\ \mathrm{K}\Omega, 20\%$

B. $270\ \mathrm{K}\Omega, 5\%$

C. $270\ \mathrm{K}\Omega, 10\%$

D. $27\ \mathrm{K}\Omega, 10\%$

Correct answer: D

Source solution

Sol. Color code: Red violet orange silver $\mathrm{R} = 27 \times 10^3\ \Omega \pm 10\%$

$$= 27\,\mathrm{K}\,\Omega \pm 10\%$$

Question 141

The energy dissipated by a resistor is 10 mJ in 1 s when an electric current of 2 mA flows through it. The resistance is Ω.
(Round off to the Nearest Integer)

Numerical answer: _____

Enter the requested value (an integer; 0 decimal places). Use the units and scaling stated in the question.

Correct answer: 2500

Source solution

Ans. (2500)

$$Q = i^2RT$$

$$R = \frac{Q}{i^2t} = \frac{10\times10^{-3}}{4\times10^{-6}\times1} = 2500\Omega$$

Question 142

A battery of unknown emf connected to a potentiometer has balancing length 560 cm . If a resistor of resistance 10Ω is connected in parallel with the cell the balancing length change by 60 cm . If the internal resistance of the cell is $\frac{n}{10}\Omega$, the value of ' n ' is

Numerical answer: _____

Enter the requested value (an integer; 0 decimal places). Use the units and scaling stated in the question.

Correct answer: 12

Source solution

(12)

Let the emf of cell is ε internal resistance is $'r'$ and potential gradient is x.

$$\varepsilon = 560x \tag{1}$$

After connecting the resistor

$$\frac{\varepsilon \times 10}{10 + r} = 500x \tag{2}$$

From (1) and (2)

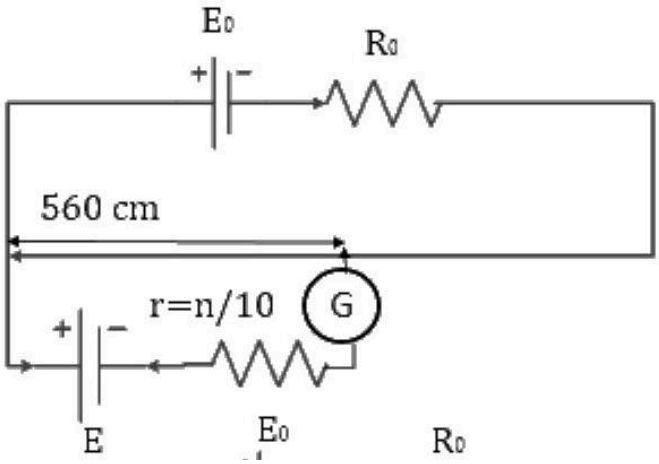

$$\frac{560 \times 10}{10 + r} = 500s$$
$$56 = 540 + 5r$$
$$r = \frac{6}{5} = 1.2\Omega$$

$$\mathbf{n = 12}$$

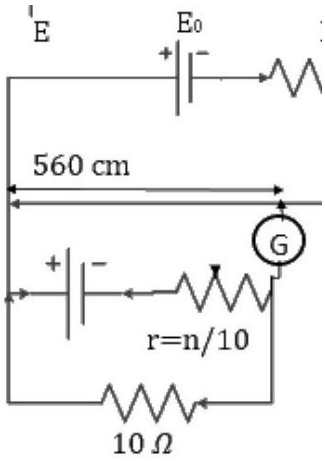

Question 143

Two batteries (connected in series) of same emf 10 V of internal resistances 20Ω and 5Ω are connected to a load resistance of 30Ω. Now an unknown resistance x is connected in parallel to the load resistance. Find value of x so that potential drop of battery having internal resistance 20Ω becomes zero.

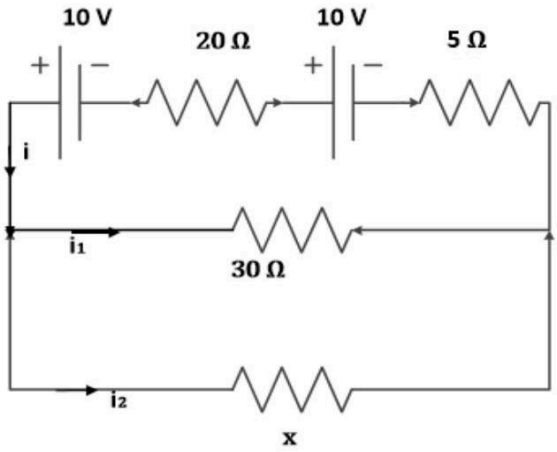

Numerical answer: _____

Enter the requested value (an integer; 0 decimal places). Use the units and scaling stated in the question.

Correct answer: 30

Source solution

(30) If V_1 and V_2 are terminal voltage across the two batteries.

$$V_1 = 0$$
$$V_1 = \varepsilon_1 - i.r_1$$
$$0 = 10 - i \times 20$$
$$i = 0.5\ \text{A}$$
$$V_2 = 10 - 0.5 \times 5$$
$$V_2 = 7.5\ \text{V}$$
$$0.5 = \frac{7.5}{30} + \frac{7.5}{x}$$
$$\frac{7.5}{x} = 0.25$$
$$x = 30\Omega$$

Question 144

In the figure given, the electric current flowing through the $5k\Omega$ resistor is ' x ' mA .

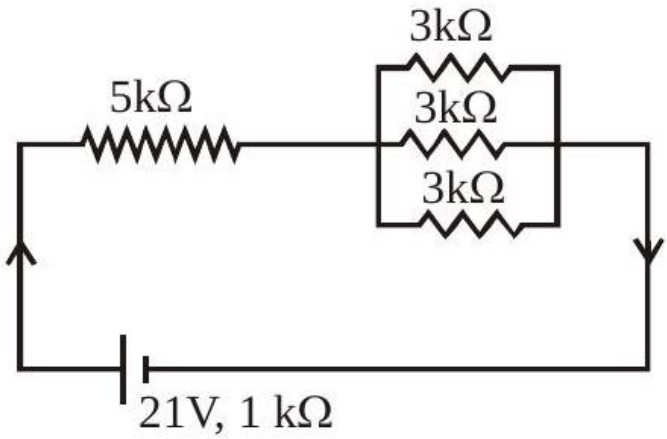

The value of x to the nearest integer is

.

Numerical answer: _____

Enter the requested value (an integer; 0 decimal places). Use the units and scaling stated in the question.

Correct answer: 3

Source solution

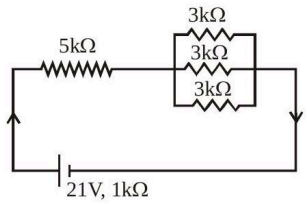

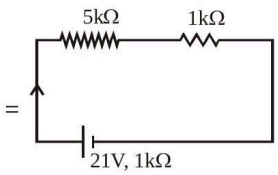

$$\mathrm{I}=\frac{21}{5+1+1}=3\ \mathrm{mA}$$

Question 145

The voltage across the 10Ω resistor in the given circuit is x volt.

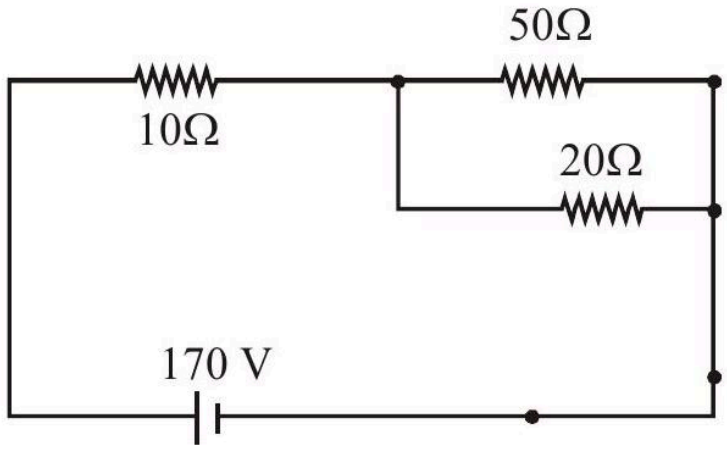

The value of ' x ' to the nearest integer is .

Numerical answer: _____

Enter the requested value (an integer; 0 decimal places). Use the units and scaling stated in the question.

Correct answer: 70

Source solution

$R_{eq_1} = \frac{50 \times 20}{70} = \frac{100}{7}$

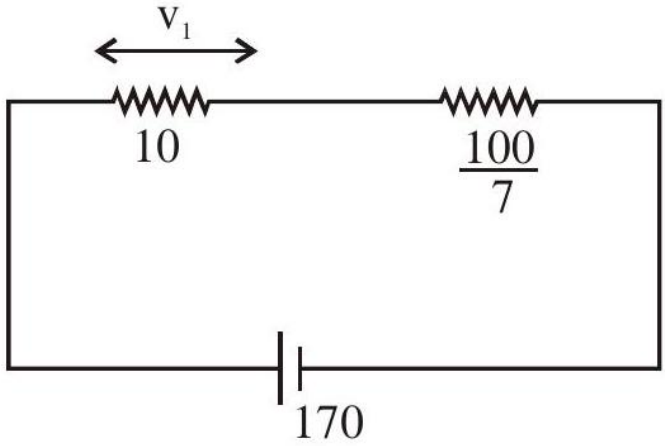

$R_{eq} = \frac{170}{7}$

$\mathbf{v_1} = \left[\frac{170}{\frac{170}{7}}\right] \times 10 = 70\mathbf{v}$
Ans. $= 70.00$

Question 146

The circuit shown in the figure consists of a charged capacitor of capacity $3\mu\ \mathbf{F}$ and a charge of $30\mu\mathbf{C}$. At time $t = 0$, when the key is closed, the value of current flowing through the $5\mathbf{M\Omega}$ resistor is ' x ' $\mu - \mathbf{A}$. The value of ' x to the nearest integer is .

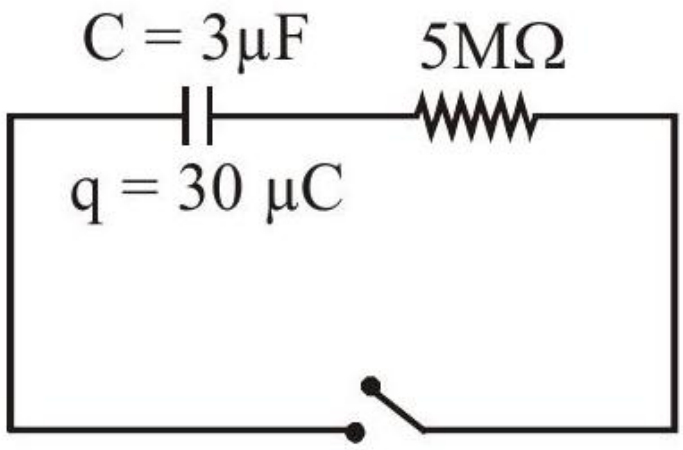

Numerical answer: _____

Enter the requested value (an integer; 0 decimal places). Use the units and scaling stated in the question.

Correct answer: 2

Source solution

$i_0 = \frac{V}{R} = \frac{30/3}{5\times10^6} = 2 \times 10^{-6}$
$\therefore$ Ans. $= 2.00$

Question 147

Refer to the circuit diagram given in the figure, which of the following observation are correct?A. Total resistance of circuit is 6Ω.B. Current in Ammeter is 1 AC. Potential across AB is 4 Volts.D. Potential across CD is 4 Volts.E. Total resistance of the circuit is 8Ω.Choose the correct answer from the options given below:

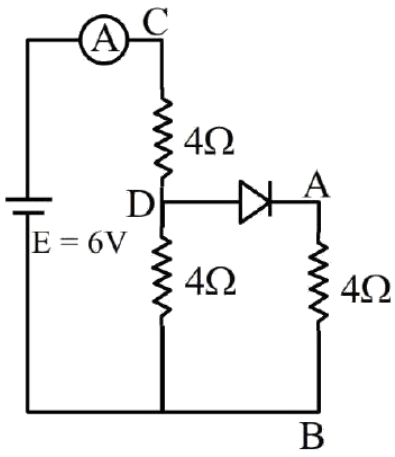

A. A, B and D only

B. A, C and D only

C. B, C and E only

D. A, B and C only

Correct answer: A

Source solution

$$I_A = 1\,\text{A}$$

$$R_{\text{net}} = 6\,\Omega$$

$$V_{AB} = IR = 0.5 \times 4 = 2\,\text{V}$$

$$V_{CD} = IR = 1 \times 4 = 4\,\text{V}$$

$$\boxed{V_{AB} = 2\,\text{V}}$$

$$\boxed{V_{CD} = 4\,\text{V}}$$

Options A, B and D are correct.

Question 148

Find the equivalent resistance between two ends of the following circuit.

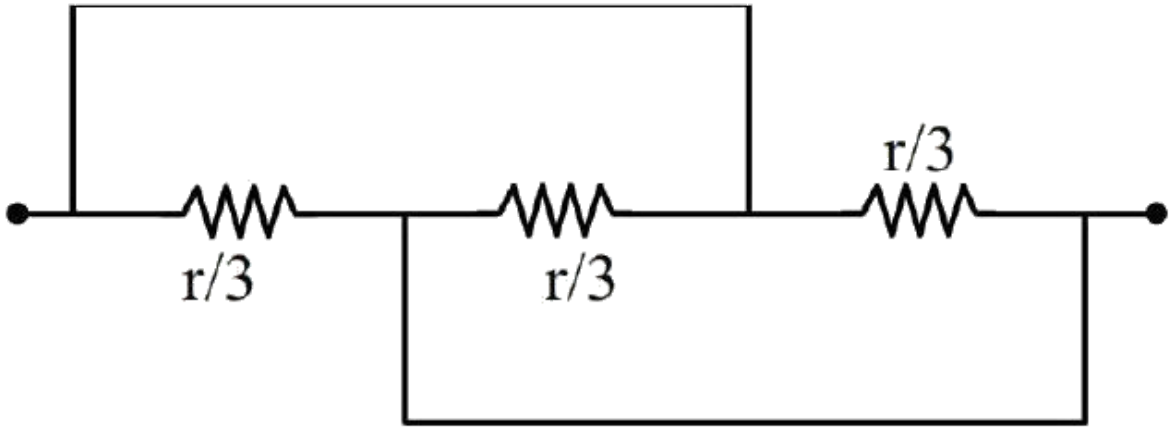

A. r

B. $\frac{r}{6}$

C. $\frac{r}{9}$

D. $\frac{r}{3}$

Correct answer: C

Source solution

All three resistors $\left(\frac{r}{3}\right)$ are in parallel.

$$R_{\text{eq}} = \frac{\frac{r}{3}}{3}$$

$$\boxed{R_{\text{eq}} = \frac{r}{9}}$$

Question 149

The net current flowing in the given circuit is

A.

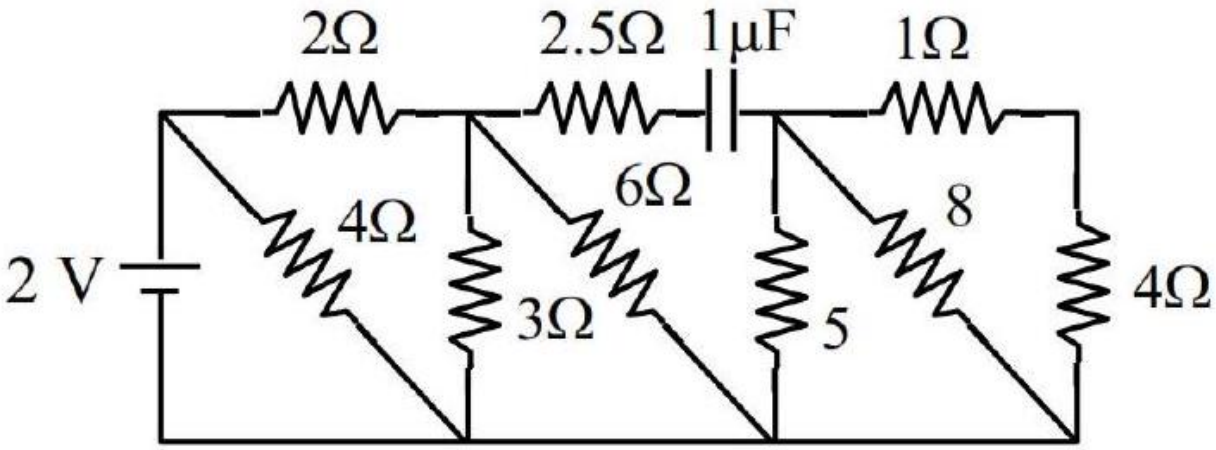

Numerical answer: _____

Enter an integer (0 digits after the decimal point). Round to the nearest integer where requested; enter the coefficient of any power of ten shown in the question.

Correct answer: 1

Source solution

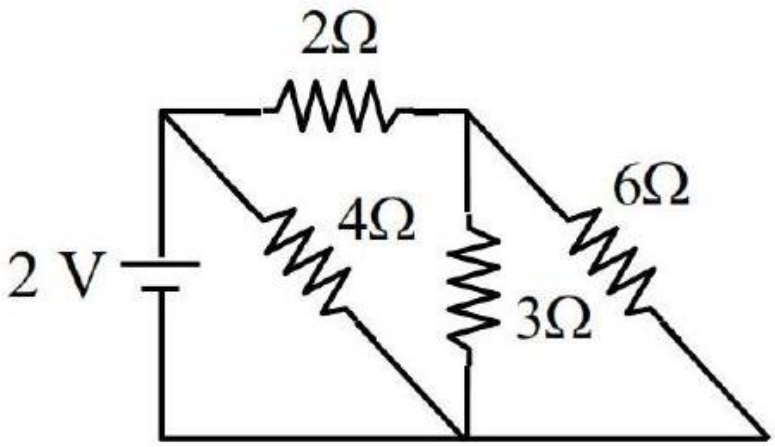

$R_{eq} = 2\Omega$

$I = \frac{2}{2} = 1\ A$

Question 150

In the given circuit, the equivalent resistance between the terminal A and B is Ω.

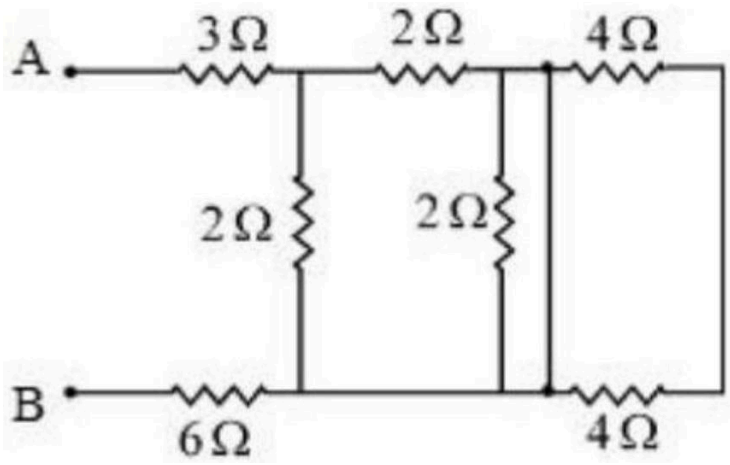

Numerical answer: _____

Enter the requested value (an integer; 0 decimal places). Use the units and scaling stated in the question.

Correct answer: 10

Source solution

10

Due to short circuit, 3 resistances get vanished from the circuit.

The circuit is

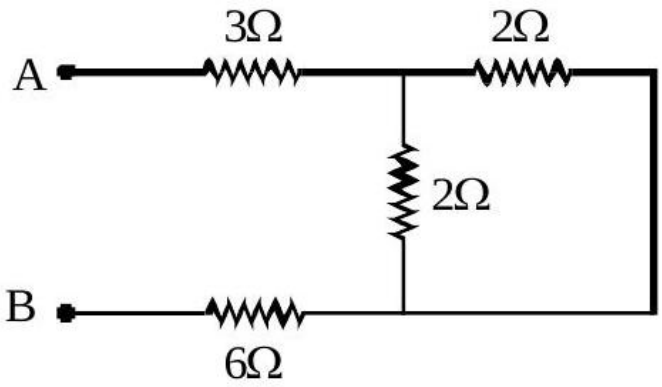

$$R_{eq} = 3 + 3 + 1 = 10\Omega$$

Question 151

A wire of resistance R is bent to form a square $ABCD$ as shown in the figure. The effective resistance between E and C is(E is mid-point of arm CD)

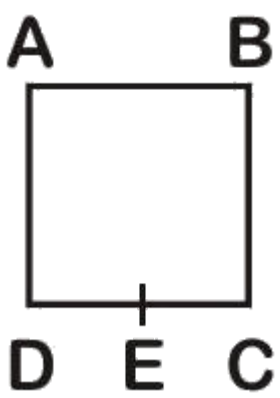

A. $\frac{3}{4}R$

B. R

C. $\frac{1}{16}R$

D. $\frac{7}{64}\mathrm{R}$

Correct answer: D

Source solution

Sol. $\mathrm{R}_1 = \frac{\mathrm{R}}{8}, \quad \mathrm{R}_2 = \frac{7\mathrm{R}}{8}$

$$\frac{1}{R_{\mathrm{eq}}} = \frac{8}{R} + \frac{8}{7R}$$

$R_{\mathrm{eq}} = \frac{7R}{64}$

Question 152

In the given circuit, the current flowing through the resistance $\mathbf{20\Omega}$ is 0.3 A , while the ammeter reads 0.9 A . The value of $\mathbf{R_1}$ is Ω.

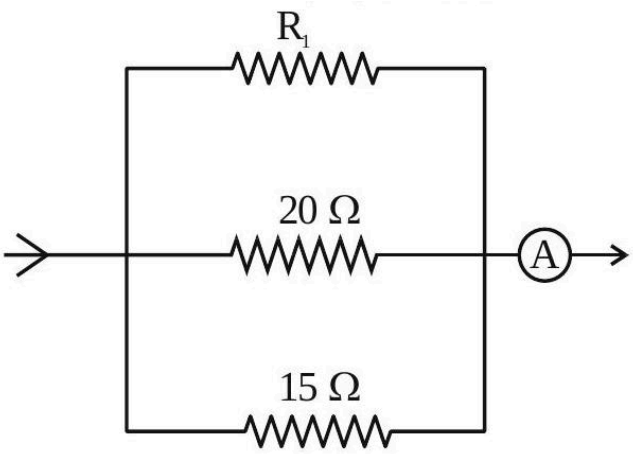

Numerical answer: _____

Enter the requested value (an integer; 0 decimal places). Use the units and scaling stated in the question.

Correct answer: 30

Source solution

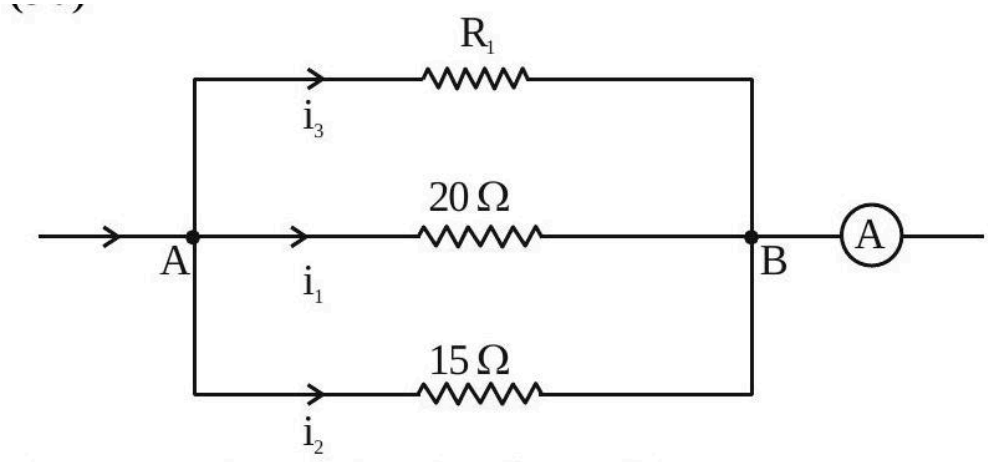

Given, $i_1 = 0.3\ \mathrm{A}, i_1 + i_2 + i_3 = 0.9\ \mathrm{A}$

So, $\mathrm{V_{AB}} = \mathrm{i_1} \times 20\Omega = 20 \times 0.3\ \mathrm{V} = 6\ \mathrm{V}$

$\mathrm{i_2} = \frac{6\ \mathrm{V}}{15\Omega} = \frac{2}{5}\ \mathrm{A}$

$\mathrm{i_1} + \mathrm{i_2} + \mathrm{i_3} = \frac{9}{10}\ \mathrm{A}$

$\frac{3}{10}+\frac{2}{5}+\mathrm{i}_3=\frac{9}{10}$
$\frac{7}{10}+\mathrm{i}_3=\frac{9}{10}$
$\mathrm{i}_3=0.2\ \mathrm{A}$
So, $\mathrm{i}_3 \times \mathrm{R}_1=6\ \mathrm{V}$
(0.2) $\mathrm{R}_1=6$
$\mathrm{R}_1=\frac{6}{0.2}=30\Omega$

Question 153

A wire of length 10 cm and radius $\sqrt{7} \times 10^{-4}\ \mathrm{m}$ connected across the right gap of a meter bridge. When a resistance of 4.5Ω is connected on the left gap by using a resistance box, the balance length is found to be at 60 cm from the left end. If the resistivity of the wire is $\mathrm{R} \times 10^{-7} \Omega\ \mathrm{m}$, then value of R is :

A. 63

B. 70

C. 66

D. 35

Correct answer: C

Source solution

For the null point,

$$\frac{4.5}{60}=\frac{R}{40}$$

Also,

$$R=\frac{p\ell}{A}=\frac{p\ell}{\pi r^2}$$

$$4.5 \times 40=\rho \times \frac{0.1}{\pi \times 7 \times 10^{-8}} \times 60$$

$\rho=66 \times 10^{-7}\ \Omega \cdot \mathrm{m}$

Question 154

First, a set of n equal resistors of 10Ω each are connected in series to a battery of emf 20 V and internal resistance 10Ω. A current I is observed to flow. Then, the n resistors are connected in parallel to the same battery. It is observed that the current is increased 20 times, then the value of n is

Numerical answer: _____

Enter the requested value (an integer; 0 decimal places). Use the units and scaling stated in the question.

Correct answer: 20

Source solution

In series

$\mathrm{R_{eq}} = \mathrm{nR} = 10\mathrm{n}$

$\mathrm{i_s} = \frac{20}{10+10\mathrm{n}} = \frac{2}{1+\mathrm{n}}$

in parallel

$\mathrm{R_{eq}} = \frac{10}{\mathrm{n}}$

$\mathrm{i_p} = \frac{20}{\frac{10}{\mathrm{n}}+10} = \frac{2\mathrm{n}}{1+\mathrm{n}}$

$\frac{i_p}{i_s} = 20$

$\frac{\left(\frac{2n}{1+n}\right)}{\left(\frac{2}{1+n}\right)} = 20$

$\mathrm{n} = 20$

Question 155

Two cells are connected between points A and B as shown. Cell 1 has emf of 12 V and internal resistance of 3Ω. Cell 2 has emf of 6 V and internal resistance of 6Ω. An external resistor R of 4Ω is connected across A and B. The current flowing through R will be A.

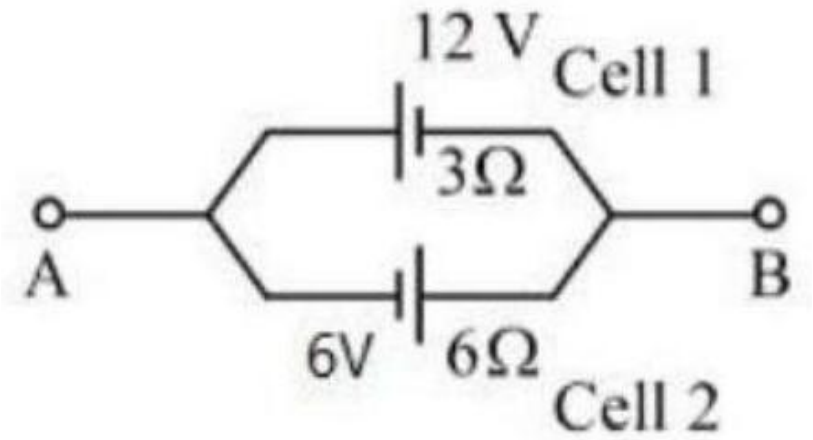

Numerical answer: _____

Enter the requested value (an integer; 0 decimal places). Use the units and scaling stated in the question.

Correct answer: 1

Source solution

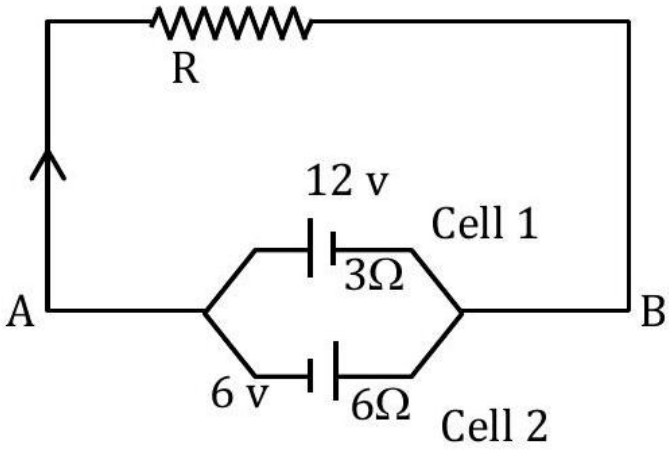

$\mathrm{v} = \frac{12\times6-6\times3}{6+3} = \frac{54}{9} = 6$ volt

$\mathrm{r_{eq}} = \frac{6\times3}{6+3} = 2\Omega$

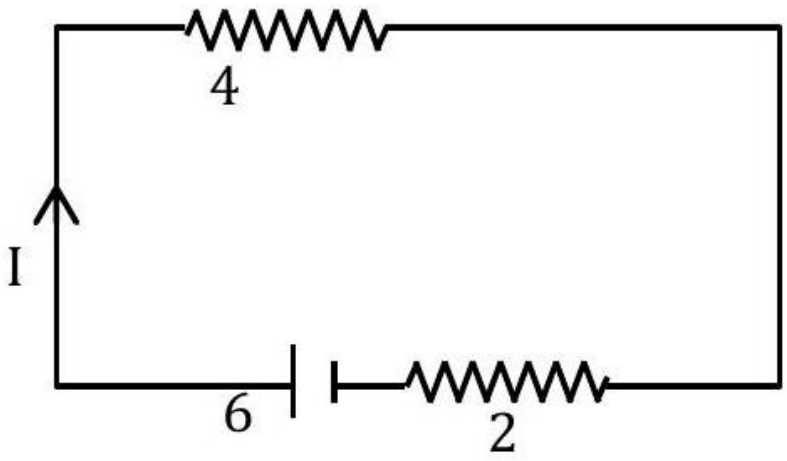

$I = \frac{6}{4+2} = 1\ \mathrm{A}$

Question 156

A uniform conducting wire of length is 24 a , and resistance R is wound up as a current carrying coil in the shape of an equilateral triangle of side ' a ' and then in the form of a square of side ' a '. The coil is connected to a voltage source $\mathrm{V_0}$. The ratio of magnetic moment of the coils in case of equilateral triangle to that for square is $1 : \sqrt{y}$ where y is

Numerical answer: _____

Enter the requested value (an integer; 0 decimal places). Use the units and scaling stated in the question.

Correct answer: 3

Source solution

In triangle shape $\mathrm{N_t} = \frac{24\mathrm{a}}{3\mathrm{a}} = 8$
In square $N_s = \frac{24a}{4a} = 6$
$\frac{M_t}{M_3} = \frac{N_t I A_t}{N_s I A_s}$ [I will be same in both]
$= \frac{8 \times \frac{\sqrt{3}}{4} \times \mathrm{a}^2}{6 \times \mathrm{a}^2}$
$\frac{\mathrm{M_t}}{\mathrm{M_s}} = \frac{1}{\sqrt{3}}$
$y = 3$

Question 157

The voltage drop across 15Ω resistance in the given figure will be V.

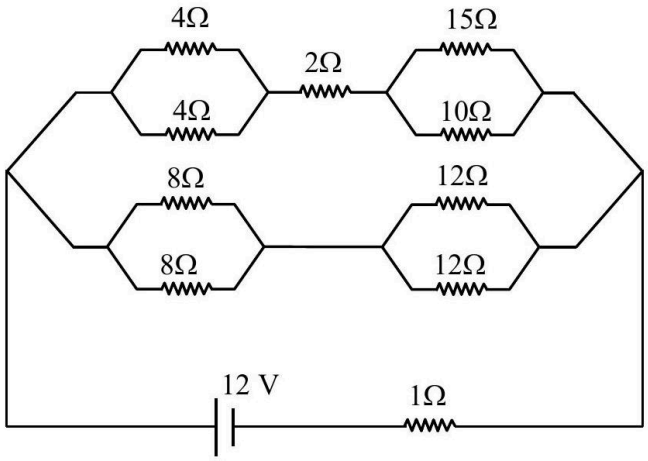

Numerical answer: _____

Enter the requested value (an integer; 0 decimal places). Use the units and scaling stated in the question.

Correct answer: 6

Source solution

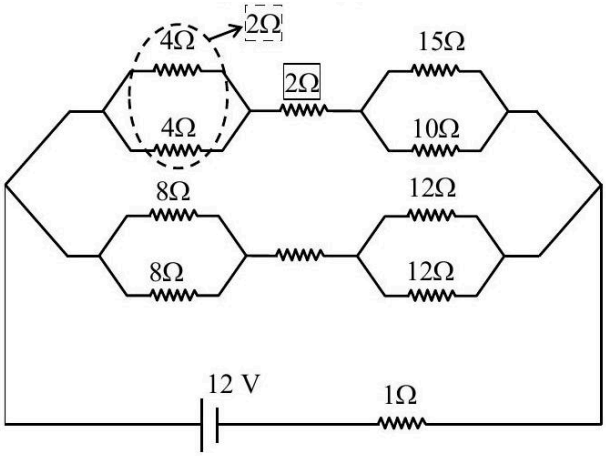

⇒ effective circuit diagram will be

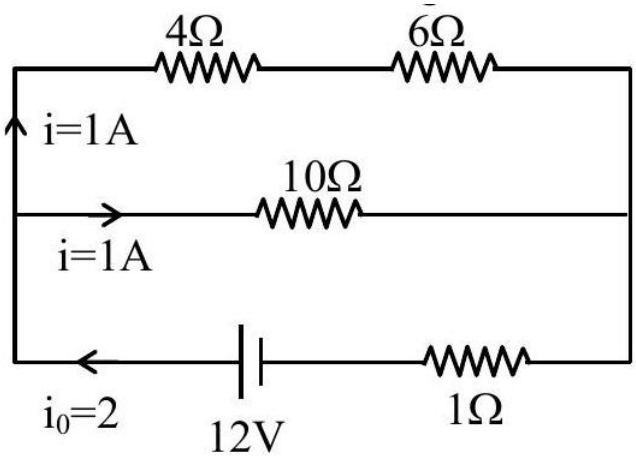

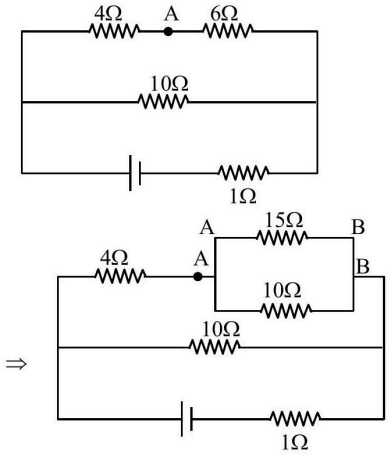

Point drop across $\mathbf{6\Omega = 1 \times 6 = 6 = V_{AB}}$

$\Rightarrow$ Hence point drop across $\mathbf{15\Omega = 6}$ volt $= \mathbf{V_{AB}}$

Question 158

The equivalent resistance of the given circuit between the terminals A and B is :

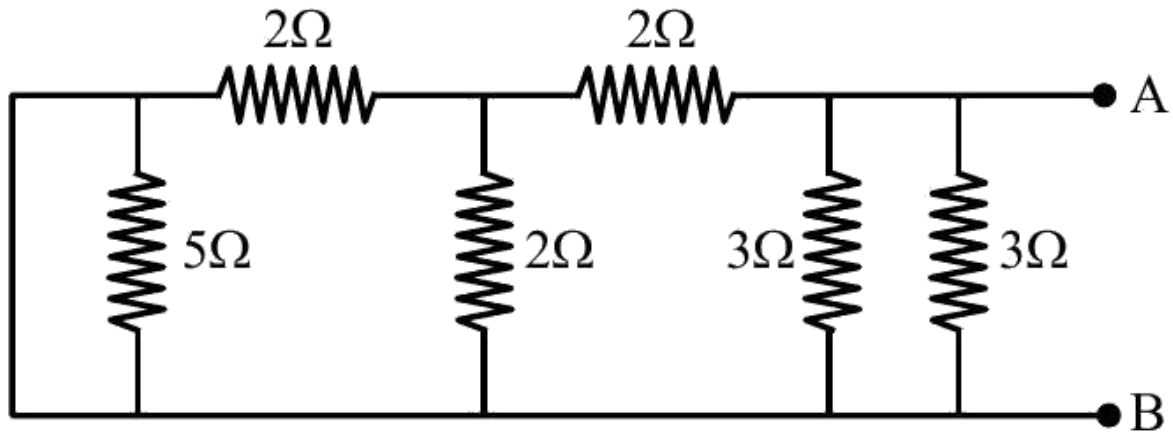

A. 0Ω

B. 3Ω

C. $\frac{9}{2}\Omega$

D. 1Ω

Correct answer: D

Source solution

$$R_{\text{eq}} = \frac{3 \times \frac{3}{2}}{3 + \frac{3}{2}}$$

$$= \frac{\frac{9}{2}}{\frac{9}{2}}$$

$$= 1\,\Omega$$

$$\boxed{R_{\text{eq}} = 1\,\Omega}$$

Question 159

The ratio of the equivalent resistance of the network (shown in figure) between the points a and b when switch is open and switch is closed is $x : 8$. The value of x is .

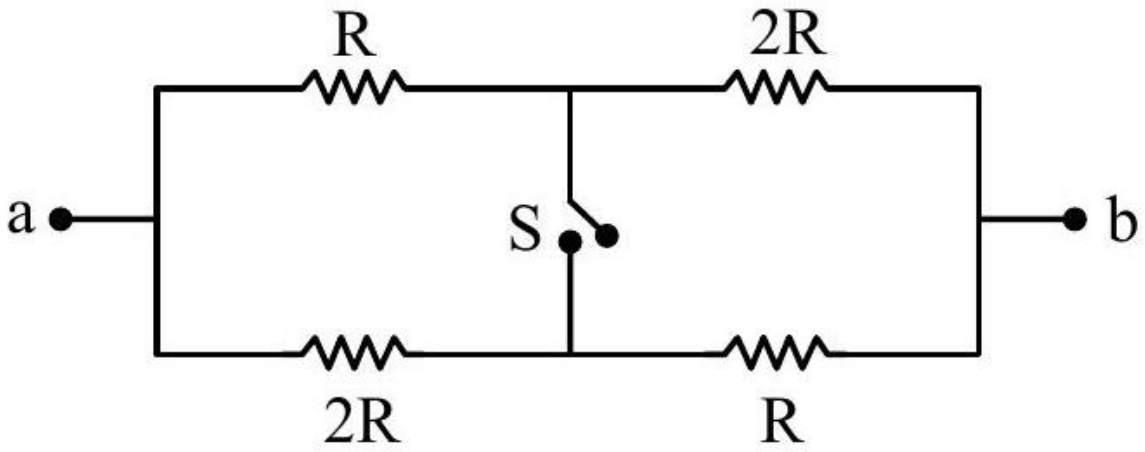

Numerical answer: _____

Enter the requested value (an integer; 0 decimal places). Use the units and scaling stated in the question.

Correct answer: 9

Source solution

$R_{\text{eq open}} = \frac{3R}{2}$

$R_{\text{eq closed}} = 2 \times \frac{R \times 2R}{3R} = \frac{4R}{3}$

$\frac{R_{\text{eq open}}}{R_{\text{eq closed}}} = \frac{3R}{2} \times \frac{3}{4R} = \frac{9}{8}$

$\therefore x = 9$

Question 160

In the following circuit, the magnitude of current I_1, is A.

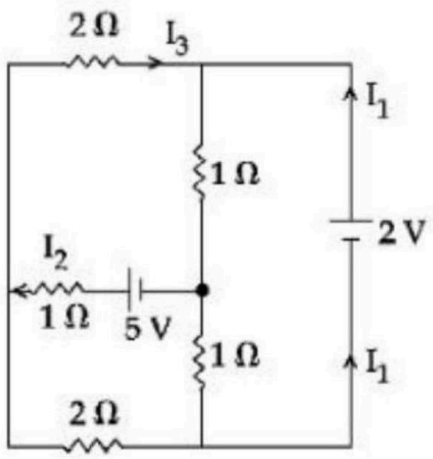

Numerical answer: _____

Enter the current in amperes to 1 decimal place.

Correct answer: 1.5

Source solution

(1.5)

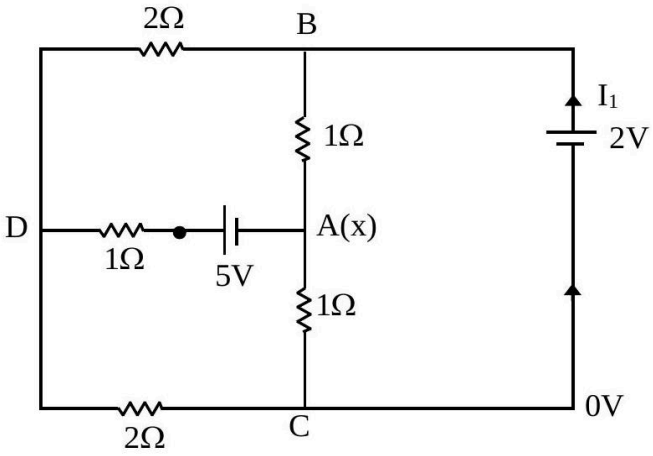

Let at junction $A \rightarrow$ voltage $= x$

$V_A = x$

$V_D = y$

$V_C = 0$

$\mathbf{V_B = 2}$

At junction 'A'

$\frac{x-2}{1} + \frac{x-0}{1} + \frac{x+5-y}{1} = 0$

$$\mathbf{3x - y + 3 = 0} \quad \mathbf{(1)}$$

At junction ' D '

$\frac{y-0}{2} + \frac{y-2}{2} + \frac{y-x-5}{1} = 0$

$\mathbf{4y - 2x = 12}$

$$\mathbf{2y - x = 6} \quad \mathbf{(2)}$$

From (1) and (2)

$\mathbf{x = 0; y = 3}$

So curent through 2 V cell is

$\mathbf{I = \frac{3}{2} = 1.5\ A}$

Question 161

An insulated copper wire of 100 turns is wrapped around a wooden cylindrical core of the crosssectional area $24\ \mathrm{cm}^2$. The two ends of the wire are connected to a resistor. The total resistance in the circuit is 12Ω. If an externally applied uniform magnetic field in the core along its axis changes from 1.5 T in one direction to 1.5 T in the opposite direction, the charge flowing through a point in the circuit during the change of magnetic field will be

mC .

Numerical answer: _____

Enter the requested value (an integer; 0 decimal places). Use the units and scaling stated in the question.

Correct answer: 60

Source solution

$$\Delta Q = -\frac{\Delta\phi}{R} = -\left(\frac{\phi_2 - \phi_1}{R}\right)$$

$\phi_1 = NBA$

$\phi_2 = -NBA$

$\therefore \Delta Q = \frac{2NBA}{R} = \frac{2\times100\times1.5\times24\times10^{-4}}{12}$

$= 6 \times 10^{-2}\mathrm{C} = 60\mathrm{mC}$

Question 162

A 1 m long metal rod XY completes the circuit as shown in figure. The plane of the circuit is perpendicular to the magnetic field of flux density 0.15 T . If the resistance of the circuit is 5Ω, the force needed to move the rod in direction, as indicated, with a constant speed of $4\ \mathrm{m/s}$ will be

10^{-3} N.

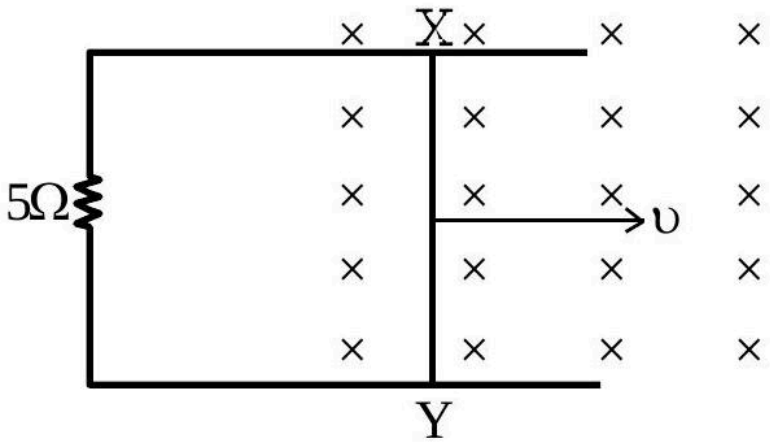

Numerical answer: _____

Enter the requested value (an integer; 0 decimal places). Use the units and scaling stated in the question.

Correct answer: 18

Source solution

$$\mathrm{F} = \mathrm{i}\ell\mathrm{B}$$
$$= \left(\frac{\varepsilon}{\mathrm{R}}\right)\ell\mathrm{B} = \left(\frac{\mathrm{vB}\ell}{\mathrm{R}}\right)\ell\mathrm{B} = \frac{\mathrm{vB}^2\ell^2}{\mathrm{R}} = \frac{4}{5} \times \left(\frac{15}{100}\right)^2 \times 1^2$$
$$= \frac{4}{5} \times \frac{225}{10^4}$$
$$= \frac{180}{10^4} = 0.018\ \mathrm{N}$$
$$= 18 \times 10^{-3}\ \mathrm{N}$$

Question 163

Two wires A and B are made up of the same material and have the same mass. Wire A has radius of 2.0 mm and wire B has radius of 4.0 mm . The resistance of wire B is 2Ω. The resistance of wire A is Ω.

Numerical answer: _____

Enter the requested value (an integer; 0 decimal places). Use the units and scaling stated in the question.

Correct answer: 32

Source solution

$$\because R = \frac{\rho \ell}{A} = \frac{\rho V}{A^2}$$
$$\therefore \frac{R_A}{R_B} = \frac{A_B^2}{A_A^2} = \frac{r_B^4}{r_A^4}$$
$$\Rightarrow \frac{R_A}{2} = \left[\frac{4\times10^{-3}}{2\times10^{-3}}\right]^4$$
$$\Rightarrow R_A = 32\Omega.$$

Question 164

A $\mathbf{220\ V, 50\ Hz}$ AC source is connected to a 25 V , 5 W lamp and an additional resistance R in series (as shown in figure) to run the lamp at its peak brightness, then the value of R (in ohm) will be

.

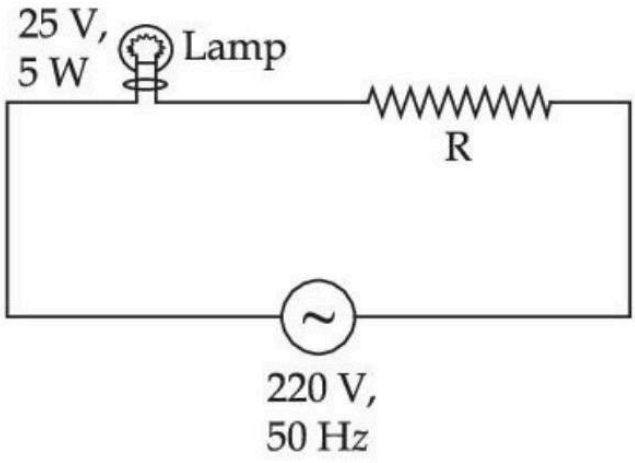

Numerical answer: _____

Enter the requested value (an integer; 0 decimal places). Use the units and scaling stated in the question.

Correct answer: 975

Source solution

$$\mathbf{P = Vi}$$
$$\mathbf{5 = 25i}$$
$$i = \tfrac{1}{5}$$
$$V_R = iR$$
$$(220 - 25) = \tfrac{1}{5}R$$
$$R = 195 \times 5 = 975\Omega$$

Moving Charges and Magnetism

Questions 165-184 / 20 selected / 6.7% practice weight / Focus first

Question 165

A solenoid of 1200 turns is wound uniformly in a single layer on a glass tube 2 m long and 0.2 m in diameter. The magnetic intensity at the center of the solenoid when a current of 2 A flows through it is?

A. $2.4 \times 10^3\ \mathrm{A\ m^{-1}}$

B. $1.2 \times 10^3\ \mathrm{A\ m^{-1}}$

C. $2.4 \times 10^{-3}\ \mathrm{A\ m^{-1}}$

D. $1\ \mathrm{A\ m^{-1}}$

Correct answer: B

Source solution

Sol.

For a long solenoid,

$$B = \mu_0 n I.$$

Given that the magnetic induction is $2B$,

$$2B = \mu_0 n I.$$

Number of turns per unit length:

$$n = \frac{1200}{2} = 600\ \mathrm{m^{-1}}.$$

Magnetic field intensity is

$$H = \frac{B}{\mu_0} = nI.$$

Substituting,

$$H = 600 \times 2.$$

$$H = 1200 \ \mathrm{A\ m^{-1}}.$$

$$\boxed{H = 1.2 \times 10^{3} \ \mathrm{A\ m^{-1}}}$$

Question 166

Two particles X and Y having equal charges are being accelerated through the same potential difference. Thereafter they enter normally in a region of uniform magnetic field and describes circular paths of radii R_1 and R_2 respectively. The mass ratio of X and Y is :

A. $\left(\frac{R_2}{R_1}\right)^2$

B. $\left(\frac{R_1}{R_2}\right)^2$

C. $\left(\frac{R_1}{R_2}\right)$

D. $\left(\frac{R_2}{R_1}\right)$

Correct answer: B

Source solution

$$R = \frac{mv}{qB} = \frac{p}{qB} = \frac{\sqrt{2m \cdot KE}}{qB} = \frac{\sqrt{2mqV}}{qB}$$

$R \propto \sqrt{m}$

$m \propto R^2$

$$\frac{m_1}{m_2} = \left(\frac{R_1}{R_2}\right)^2$$

Question 167

A sing1y ionized magnesium atom (A24) ion is accelerated to kinetic energy 5 keV and is projected perpendicularly into a magnetic field B of the magnitude 0.5 T . The radius of path formed will be cm.

Numerical answer: _____

Enter the requested value (an integer; 0 decimal places). Use the units and scaling stated in the question.

Correct answer: 10

Source solution

$R = \frac{mv}{qB} = \frac{\sqrt{2mK}}{qB}$

Question 168

Two wires A and B are carrying currents I_1 and I_2 as shown in the figure. The separation between them is d. A third wire C carrying a current I is to be kept parallel to them at a distance x from A such that the net force acting on it is zero. The possible values of x are :

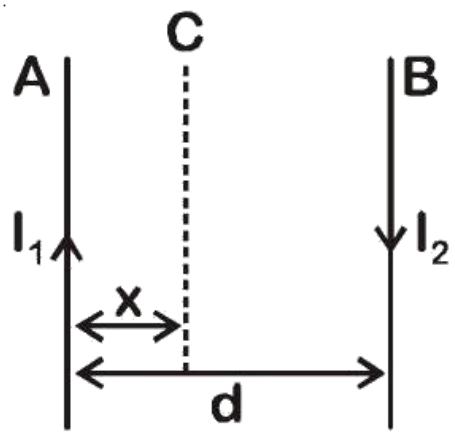

A. $x = \pm\frac{I_1 d}{(I_1 - I_2)}$

B. $x = \left(\frac{I_1}{I_1+I_2}\right)d$ and $x = \left(\frac{I_2}{I_1-I_2}\right)d$

C. $x = \left(\frac{I_2}{I_1+I_2}\right)d$ and $x = \left(\frac{I_2}{I_1-I_2}\right)d$

D. $x = \left(\frac{I_1}{I_1-I_2}\right)d$ and $x = \left(\frac{I_2}{I_1+I_2}\right)d$

Correct answer: A

Source solution

Sol.

At the neutral point, the net magnetic field is zero.

$$\sum \vec{B} = 0.$$

Let the neutral point be at a distance x from the wire carrying current I_1, where $x > d$.

The magnetic field due to a long straight wire is

$$B = \frac{\mu_0 I}{2\pi r}.$$

Hence,

$$\frac{\mu_0 I_1}{2\pi x} = \frac{\mu_0 I_2}{2\pi (x-d)}.$$

Cancelling the common factors,

$$\frac{I_1}{x} = \frac{I_2}{x-d}.$$

Cross-multiplying,

$$I_1(x-d) = I_2 x.$$

$$I_1 x - I_1 d = I_2 x.$$

$$(I_1 - I_2)x = I_1 d.$$

Therefore,

$$\boxed{x = \frac{I_1 d}{I_1 - I_2}}.$$

This is the position of the neutral point measured from the wire carrying current I_1.

Question 169

A wire X of length 50 cm carrying a current of 2 A is placed parallel to a long wire Y of length 5 m . The wire Y carries a current of 3 A . The distance between two wires is 5 cm and currents flow in the same direction. The force acting on the wire Y is :

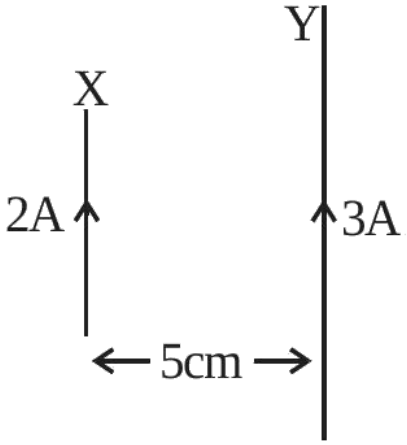

A. 1.2×10^{-5} N directed towards wire X .

B. 1.2×10^{-4} N directed away from wire X .

C. 1.2×10^{-4} N directed towards wire X .

D. 2.4×10^{-5} N directed towards wire X .

Correct answer: A

Source solution

Sol.

Magnetic field produced by wire $\mathbf{2}$ at the location of wire $\mathbf{1}$ is

$$B_{12} = \frac{\mu_0 I_2}{2\pi r}.$$

Hence, the force on wire $\mathbf{1}$ is

$$F = I_1 \ell_1 B_{12} = \frac{\mu_0 I_1 I_2 \ell_1}{2\pi r}.$$

Substituting

$$\mu_0 = 4\pi \times 10^{-7}, \quad I_1 = 6\,\text{A}, \quad I_2 = 0.5\,\text{A}, \quad r = 5 \times 10^{-2}\,\text{m}, \quad \ell_1 = 1\,\text{m},$$

$$F = \frac{4\pi \times 10^{-7} \times 6 \times 0.5}{2\pi \times 5 \times 10^{-2}}.$$

$$F = 1.2 \times 10^{-5}\,\text{N}.$$

Therefore,

$$\boxed{F = 1.2 \times 10^{-5}\,\text{N}}$$

Direction:

$$\boxed{\text{towards } X}.$$

Question 170

An emf of 0.08 V is induced in a metal rod of length 10 cm held normal to a uniform magnetic field of 0.4 T , when moves with a velocity of:

A. $2\ \mathrm{ms}^{-1}$

B. $3.2\ \mathrm{ms}^{-1}$

C. $0.5\ \mathrm{ms}^{-1}$

D. $20\ \mathrm{ms}^{-1}$

Correct answer: A

Source solution

Sol.

Induced emf is

$$\mathcal{E} = Blv.$$

Given,

$$\mathcal{E} = 0.08\ \mathrm{V}, \quad B = 0.4\ \mathrm{T}, \quad l = \frac{10}{100} = 0.1\ \mathrm{m}.$$

Therefore,

$$0.08 = 0.4 \times 0.1 \times v.$$

$$v = \frac{0.08}{0.04} = 2\ \mathrm{m/s}.$$

$$\boxed{v = 2\ \mathrm{m/s}}$$

Question 171

A straight wire AB of mass 40 g and length 50 cm is suspended by a pair of flexible leads in uniform magnetic field of magnitude 0.40 T as shown in the figure. The magnitude of the current required in the wire to remove the tension in the supporting leads is A. (Take $\mathbf{g = 10\ ms^{-2}}$).

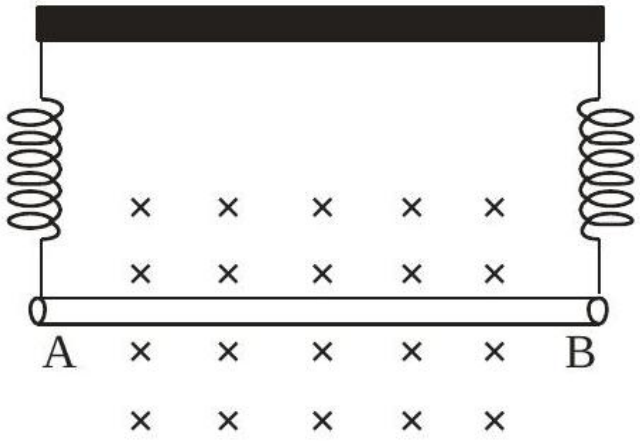

Numerical answer: _____

Enter the requested value (an integer; 0 decimal places). Use the units and scaling stated in the question.

Correct answer: 2

Source solution

For equilibrium

$\mathbf{Mg = I\ell B}$

$\mathbf{I = \frac{mg}{\ell B} = \frac{40\times10^{-3}\times10}{50\times10^{-2}\times0.4} = 2\ A}$

Question 172

Two long straight wires P and Q carrying equal current 10 A each were kept parallel to each other at 5 cm distance. Magnitude of magnetic force experienced by 10 cm length of wire P is F_1 - If distance between wires is halved and currents on them are doubled, force F_2 on 10 cm length of wire P will be:

A. $\frac{F_1}{8}$

B. $8\,\mathrm{F}_1$

C. $10F_1$

D. $\frac{F_1}{10}$

Correct answer: B

Source solution

Sol.

The force between two parallel current-carrying wires is

$$F = \frac{\mu_0 I_1 I_2 \ell}{2\pi r}.$$

Since the length ℓ is the same in both cases,

$$F \propto \frac{I^2}{r}.$$

Therefore,

$$\frac{F_1}{F_2} = \left(\frac{I}{2I}\right)^2 \left(\frac{r_2}{r_1}\right).$$

Given,

$$r_1 = 5\ \mathrm{cm}, \qquad r_2 = \frac{5}{2}\ \mathrm{cm}.$$

Hence,

$$\frac{F_1}{F_2} = \left(\frac{1}{2}\right)^2 \left(\frac{5/2}{5}\right) = \frac{1}{4} \cdot \frac{1}{2} = \frac{1}{8}.$$

Thus,

$$\boxed{F_2 = 8F_1}.$$

Question 173

A long straight wire of circular cross-section (radius a) is carrying steady current I. The current I is uniformly distributed across this cross-section. The magnetic field is

A. Zero in the region $\mathbf{r < a}$ and inversely proportional to r in the region $r > a$

B. Inversely proportional to r in the region $r < a$ and uniform throughout in the region $\mathbf{r > a}$

C. Directly proportional to r in the region $\mathbf{r < a}$ and inversely proportional to r in the region $r > a$

D. Uniform in the region $\mathbf{r < a}$ and inversely proportional to distance r from the axis, in the region $\mathbf{r > a}$

Correct answer: C

Source solution

Sol.

Using Ampere's circuital law for a long solid cylindrical conductor of radius a carrying current I uniformly distributed over its cross-section:

For $r \leq a$,

$$I_{\text{enc}} = I\left(\frac{\pi r^2}{\pi a^2}\right) = I\frac{r^2}{a^2}.$$

Applying Ampere's law,

$$B(2\pi r) = \mu_0 I_{\text{enc}} = \mu_0 I\frac{r^2}{a^2}.$$

$$\boxed{B = \frac{\mu_0 I r}{2\pi a^2}, \qquad r \leq a}$$

For $r \geq a$, the entire current is enclosed:

$$B(2\pi r) = \mu_0 I.$$

$$\boxed{B = \frac{\mu_0 I}{2\pi r}, \qquad r \geq a}$$

Hence,

$$B = \begin{cases} \dfrac{\mu_0 I r}{2\pi a^2}, & r \leq a, \\ \dfrac{\mu_0 I}{2\pi r}, & r \geq a. \end{cases}$$

Question 174

A 20 cm long metallic rod is rotated with 210 rpm about an axis normal to the rod passing through its one end. The order end of the rod is in contact with a circular metallic ring. A constant and uniform magnetic field 0.2 T parallel to the axis exists everywhere. The emf developed between the centre and the ring is mV .

Take $\pi = \frac{22}{7}$

Numerical answer: _____

Enter the requested value (an integer; 0 decimal places). Use the units and scaling stated in the question.

Correct answer: 88

Source solution

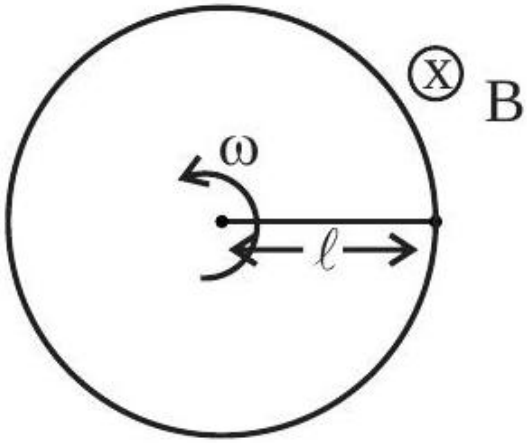

Here $\omega = 210\text{rpm}$
$= 210 \times \frac{2\pi}{60}\text{rad/s}$
$\Rightarrow \omega = 7\pi\text{rad/s}$
$\&\ell = 0.2\ \text{m}$
$\&\ \text{B} = 0.2\ \text{T}$
emf developed across rod is $= \frac{1}{2}\ \text{B}\omega\ell^2$
$\frac{1}{2} \times 0.2 \times 7\pi \times (0.2)^2$
$= 88\text{mV}$

Question 175

A coil having 100 turns, area of $5 \times 10^{-3}\ \mathrm{m}^2$, carrying current of 1 mA is placed in uniform magnetic field of 0.20 T such a way that plane of coil is perpendicular to the magnetic field. The work done in turning the coil through 90° is $\mu\mathrm{J}$.

Numerical answer: _____

Enter the requested value (an integer; 0 decimal places). Use the units and scaling stated in the question.

Correct answer: 100

Source solution

$$W = \Delta U = U_f - U_i$$
$$\mathrm{W} = (-\vec{\mu} \cdot \overrightarrow{\mathrm{B}})_{\mathrm{f}} - (-\vec{\mu} \cdot \overrightarrow{\mathrm{B}})_{\mathrm{i}}$$
$$= 0 + (\vec{\mu} \cdot \overrightarrow{\mathrm{B}})_{\mathrm{i}}$$
$$= \left(100 \times 5 \times 10^{-3} \times 1 \times 10^{-3}\right) \times 0.2\ \mathrm{J}$$
$$= 1 \times 10^{-4}\ \mathrm{J} = 100\mu\ \mathrm{J}$$

Question 176

A straight wire carrying a current of 14 A is bent into a semicircular are of radius 2.2 cm as shown in the figure. The magnetic field produced by the current at the centre (O) of the arc. is $\quad\times 10^{-4}\ \mathrm{T}$

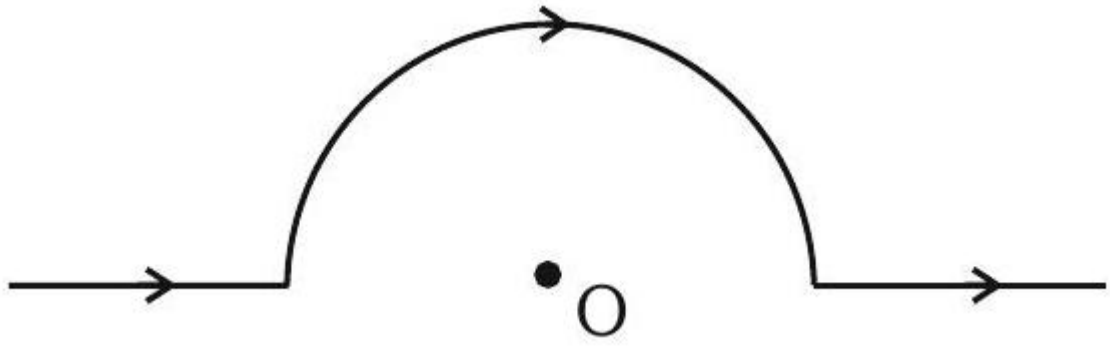

Numerical answer: _____

Enter the requested value (an integer; 0 decimal places). Use the units and scaling stated in the question.

Correct answer: 2

Source solution

$$B_{\text{at } O} = \frac{\mu_0 I}{4R} = \frac{4\pi\times 10^{-7}\times 14}{4\times 2.2\times 10^{-2}} = 2\times 10^{-4}\ \mathrm{T}$$

Question 177

Two long parallel wires carrying currents 8 A and 15 A in opposite directions are placed at a distance of 7 cm from each other. A point P is at equidistant from both the wires such that the lines joining the point P to the wires are perpendicular to each other. The magnitude of magnetic field at P is $\quad \times 10^{-6}\ \mathrm{T}$
(Given : $\sqrt{2} = 1 \cdot 4$)

Numerical answer: _____

Enter the requested value (an integer; 0 decimal places). Use the units and scaling stated in the question.

Correct answer: 60

Source solution

60

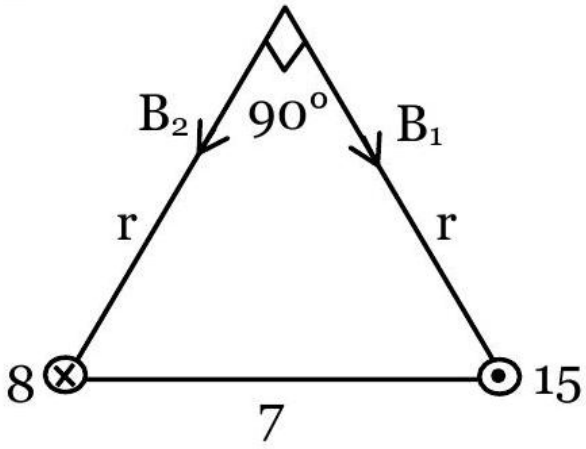

$\mathrm{r} = \frac{7}{\sqrt{2}}\ \mathrm{cm}$

$\mathrm{B} = \sqrt{\mathrm{B}_1^2 + \mathrm{B}_2^2} = \sqrt{\left(\frac{\mu_0 \mathrm{I}_1}{2\pi \mathrm{r}}\right)^2 + \left(\frac{\mu_0 \mathrm{I}_2}{2\pi \mathrm{r}}\right)^2}$

$= \frac{\mu_0}{2\pi \mathrm{r}} \sqrt{8^2 + 15^2}$

$= \frac{4\pi \times 10^{-7} \times 17}{2\pi \times \frac{7}{\sqrt{2}} \times 10^{-2}} = 68 \times 10^{-6}$

$= 68$

Question 178

A current carrying rectangular loop $PQRS$ is made of uniform wire. The length $PR = QS = 5\ \text{cm}$ and $= RS = 100\ \text{cm}$. If ammeter current reading changes from I to $2I$, the ratio of magnetic forces per unit length on the wire PQ due to wire RS in the two cases respectively ($f_{PQ}^{I} : f_{PQ}^{2I}$) is:

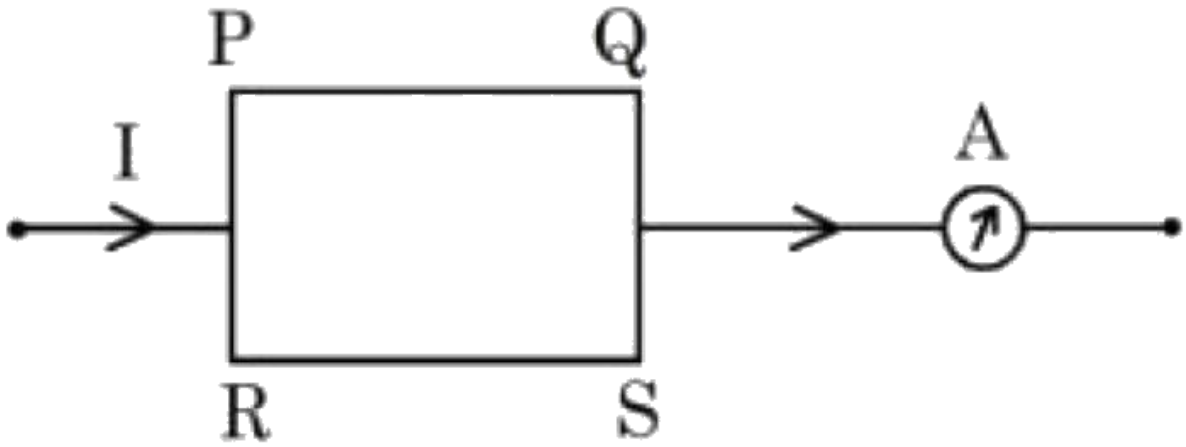

A. $1:2$

B. $1:3$

C. $1:4$

D. $1:5$

Correct answer: C

Source solution

Sol.

The force between two parallel current-carrying wires is

$$F = \frac{\mu_0 I_1 I_2 \ell}{2\pi r}.$$

Hence,

$$F \propto I_1 I_2.$$

Therefore,

$$\frac{F_1}{F_2} = \frac{I_1 I_2}{(2I_1)(2I_2)} = \frac{1}{4}.$$

$$\boxed{\frac{F_1}{F_2} = \frac{1}{4}}$$

Question 179

The magnetic field existing in a region is given by $\overrightarrow{\mathbf{B}} = \mathbf{0.2(1+2x)\hat{k}T}$. A square loop of edge 50 cm carrying 0.5 A current is placed in $\mathbf{x-y}$ plane with its edges parallel to the $x-y$ axes, as shown in figure. The magnitude of the net magnetic force experienced by the loop is mN .

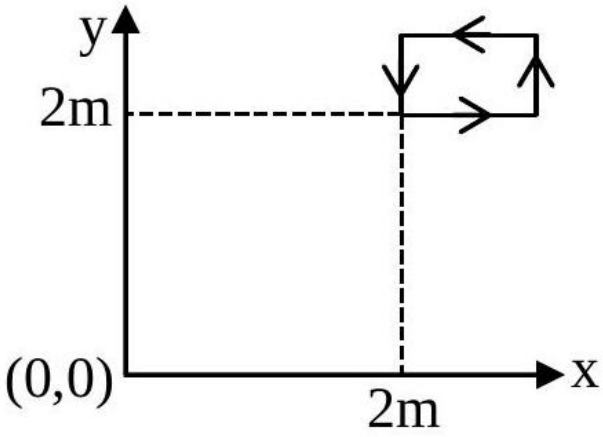

Numerical answer: _____

Enter the requested value (an integer; 0 decimal places). Use the units and scaling stated in the question.

Correct answer: 50

Source solution

Force on segment parallel to x -axis will cancel each other. Hence F_{net} will be due to portion parallel to y -axis.

$\mathbf{F} = 0.5 \times 0.5 \times 6 \times 0.2 - 0.5 \times 0.5 \times 0.2 \times 5$

$= 0.5 \times 0.5 \times 0.2$

$= 0.25 \times 0.2$

$= 50 \times 10^{-3}\ \mathbf{N}$

$= \mathbf{50mN}$

Question 180

A rod with circular cross-section area $2\ \mathrm{cm}^2$ and length 40 cm is wound uniformly with 400 turns of an insulated wire. If a current of 0.4 A flows in the wire windings, the total magnetic flux produced inside windings is $4\pi \times 10^{-6}\ \mathrm{Wb}$. The relative permeability of the rod is(Given : Permeability of vacuum $\mu_0 = 4\pi \times 10^{-7}\mathrm{NA}^{-2}$)

A. $\frac{5}{16}$

B. 12.5

C. 125

D. $\frac{32}{5}$

Correct answer: A

Source solution

Magnetic field in the solenoid,

$$B = \mu_0 \mu_r n l$$

Magnetic flux,

$$\phi = N\left(BA\right) = N\left(\mu_0 \mu_r n I A\right)$$

$$4\pi \times 10^{-6} = 400\left(4\pi \times 10^{-7}\mu_r \times \frac{400}{0.4} \times 0.4 \times 2 \times 10^{-4}\right)$$

$$\frac{1}{40} = \mu_r \times 8 \times 10^{-2}$$

$$\mu_r = \frac{100}{320} = \frac{5}{16}$$

Question 181

Two identical circular wires of radius 20 cm and carrying current $\sqrt{2}\ \mathbf{A}$ are placed in perpendicular planes as shown in figure. The net magnetic field at the centre of the circular wire is $\times 10^{-8}$ T. (Take $\pi = 3.14$)

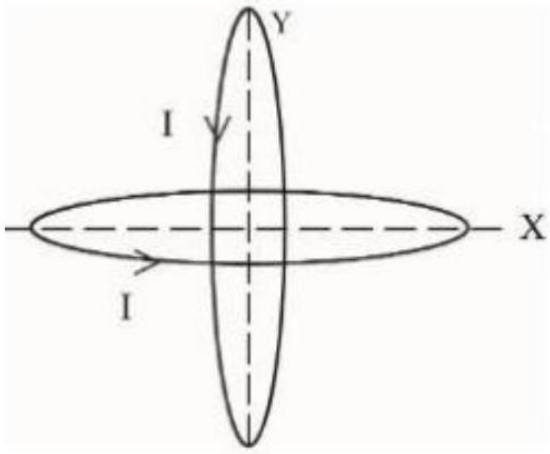

Numerical answer: _____

Enter the requested value (an integer; 0 decimal places). Use the units and scaling stated in the question.

Correct answer: 628

Source solution

Magnetic field $\mathbf{B_C}$ at center $= \frac{\mu_0 \mathbf{i}}{2\mathbf{r}}$

$$= \frac{4\pi \times 10^{-7}}{2 \times 0.2} \times \sqrt{2}\ \mathrm{T}$$

Net magnetic field is

$$\begin{aligned} \mathbf{B_C}\sqrt{2} = \frac{4\pi \times 10^{-7} \times \sqrt{2}}{2 \times 0.2} \times \sqrt{2}\ \mathrm{T} &= 2\pi \times 10^{-6}\ \mathrm{T} \\ &= 200\pi \times 10^{-8}\ \mathrm{T} \\ &= 2 \times 314 \times 10^{-8}\ \mathrm{T} \\ &= 628 \times 10^{-8}\ \mathrm{T} \end{aligned}$$

Question 182

An electron in a hydrogen atom revolves around its nucleus with a speed of $6.76 \times 10^6\ \mathrm{ms}^{-1}$ in an orbit of radius $0.52\ \mathrm{A}^\circ$. The magnetic field produced at the nucleus of the hydrogen atom is T.

Numerical answer: _____

Enter the requested value (an integer; 0 decimal places). Use the units and scaling stated in the question.

Correct answer: 40

Source solution

Magnetic field due to moving charge

$$\mathrm{B} = \frac{\mu_0}{4\pi}\frac{\mathrm{qv}\sin\theta}{\mathrm{r}^2}$$
$$\mathrm{B} = \frac{\mu_0}{4\pi}\frac{\mathrm{ev}\sin(\pi/2)}{\mathrm{r}^2}$$
$$\mathrm{B} = \frac{10^{-7}\times 1.6\times 10^{-19}\times 6.76\times 10^6}{0.52\times 0.52\times 10^{-20}}$$
$$\mathrm{B} = 40\ \mathrm{T}$$

Question 183

The magnetic field inside a 200 turns solenoid of radius 10 cm is $2.9 \times 10^{-4}\mathrm{Tesla}$. If the solenoid carries a current of 0.29 A , then the length of the solenoid is $\pi\mathrm{cm}$.

Numerical answer: _____

Enter the requested value (an integer; 0 decimal places). Use the units and scaling stated in the question.

Correct answer: 8

Source solution

Assuming long solenoid

$$\mathrm{B} = \mu_0\left(\frac{\mathrm{N}}{\ell}\right)\mathrm{i}$$
$$\ell = \frac{\mu_0 \mathrm{Ni}}{\mathrm{B}} = \frac{(4\pi\times 10^{-7})(200)(0.29)}{2.9\times 10^{-4}}\ \mathrm{m}$$
$$= 8\pi\ \mathrm{cm}$$

Question 184

An electron with energy 0.1 keV moves at right angle to the earth's magnetic field of $1 \times 10^{-4} \mathrm{Wbm}^{-2}$. The frequency of revolution of the electron will be(Take mass of electron $= 9.0 \times 10^{-31}\ \mathrm{kg}$)

A. $1.6 \times 10^{5}\ \mathrm{Hz}$

B. $5.6 \times 10^{5}\ \mathrm{Hz}$

C. $2.8 \times 10^{6}\ \mathrm{Hz}$

D. $1.8 \times 10^{6}\ \mathrm{Hz}$

Correct answer: C

Source solution

Sol.

For an electron moving perpendicular to a uniform magnetic field, the time period of revolution is

$$T = \frac{2\pi m}{eB}.$$

Hence,

$$f = \frac{1}{T}.$$

$$f = \frac{eB}{2\pi m}.$$

Substituting

$$e = 1.6 \times 10^{-19}\ \mathrm{C}, \quad B = 10^{-4}\ \mathrm{T}, \quad m = 9 \times 10^{-31}\ \mathrm{kg},$$

$$f = \frac{1.6 \times 10^{-19} \times 10^{-4}}{2\pi \times 9 \times 10^{-31}}.$$

$$f \approx 2.8 \times 10^{6}\ \text{Hz}.$$

Magnetism and Matter

Questions 185-186 / 2 selected / 0.7% practice weight / Consolidate

Question 185

Match List-I with List-II.

List-I	List-II
(A) Magnetic induction	(III) Gauss
(B) Magnetic intensity	(IV) Ampere meter
(C) Magnetic flux	(II) Weber
(D) Magnetic moment	(I) Ampere meter^2

Choose the correct answer from the options given below:

A. (A)-(III), (B)-(IV), (C)-(I), (D)-(II)

B. (A)-(III), (B)-(IV), (C)-(II), (D)-(I)

C. (A)-(I), (B)-(II), (C)-(III), (D)-(IV)

D. (A)-(III), (B)-(II), (C)-(I), (D)-(IV)

Correct answer: B

Source solution

(A) Magnetic induction (B):
The SI unit of magnetic induction is tesla (T), not gauss.

$$\text{Correct unit: Tesla (T)}, \quad 1\,\text{T} = 10^4\,\text{gauss}$$

(B) Magnetic intensity (H):

$$H = \frac{B}{\mu}$$

Its SI unit is ampere per meter (A m^{-1}).

$$\textbf{Correct unit: A m}^{-1}$$

(C) Magnetic flux ($\boldsymbol{\Phi}$):
The SI unit of magnetic flux is \textit{weber (Wb)}.

$$\textbf{Correct unit: Weber (Wb)}$$

(D) Magnetic moment ($\boldsymbol{M}$):

$$M = i \times A$$

Hence its SI unit is:

$$\textbf{ampere} \cdot \textbf{meter}^2 \ (A\,m^2)$$

Conclusion:

All given options are correct except that in (A), gauss is a CGS unit, not SI.

$$\boxed{\textbf{Correct answer: (2)}}$$

Question 186

The coercivity of a magnet is $5 \times 10^3\ \mathrm{A/m}$. The amount of current required to be passed in a solenoid of length 30 cm and the number of turns 150 , so that the magnet gets demagnetised when inside the solenoid is .A.

Numerical answer: _____

Enter the requested value (an integer; 0 decimal places). Use the units and scaling stated in the question.

Correct answer: 10

Source solution

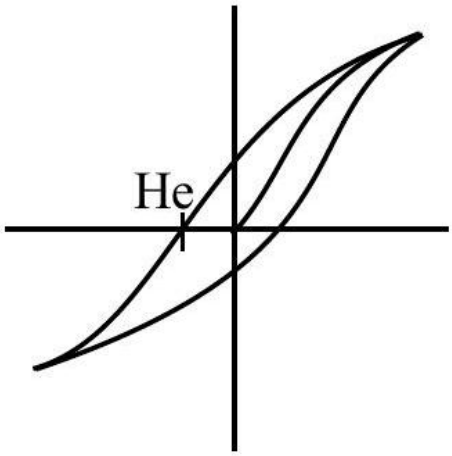

$\mathrm{H_c} = \frac{\mu_o \mathrm{ni}}{\mu_o}$

$5 \times 10^3 = \frac{150}{30} \times 100 \times \mathrm{i}$

$\frac{50}{5} = \mathrm{i}$

$\mathrm{I} = 10$

Electromagnetic Induction

Questions 187-209 / 23 selected / 7.7% practice weight / Focus first

Question 187

A square loop of side 20 cm and resistance 1Ω is moved towards right with a constant speed v_0. The right arm of the loop is in a uniform magnetic field of 5T. The field is perpendicular to the plane of the loop and is going into it. The loop is connected to a network of resistors each of value 4Ω. What should be the value of v_0 so that a steady current of 2 mA flows in the loop ?

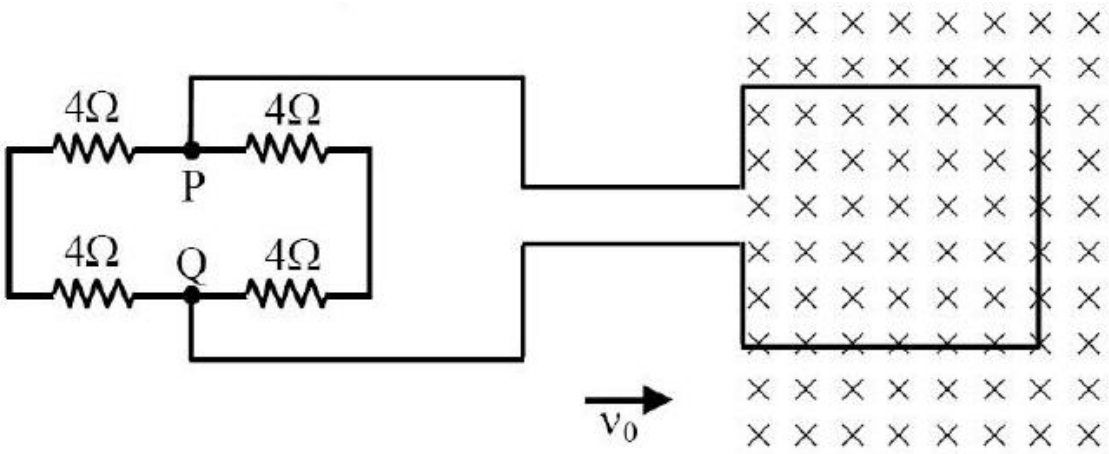

A. 1 m/s

B. 1 cm/s

C. 10^2 m/s

D. 10^{-2} cm/s

Correct answer: B

Source solution

Equivalent circuit

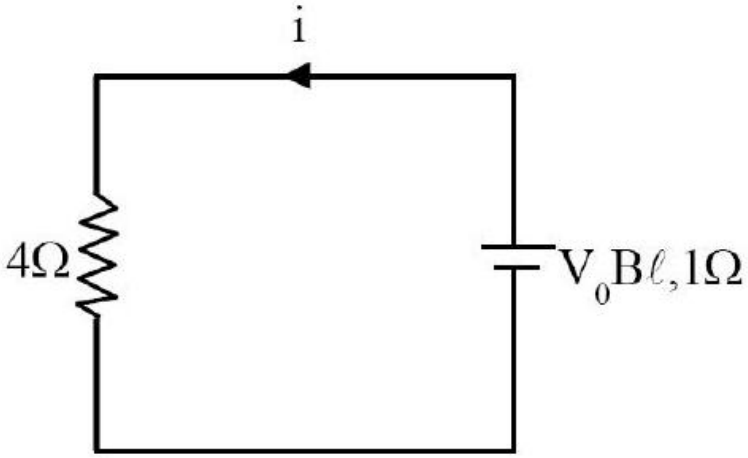

$$i = \frac{V_0 B\ell}{4+1} \Rightarrow V_0 = \frac{5(2\ \text{mA})}{5 \times .2} = 10^{-2}\ \text{m/s} = 1\ \text{cm/s}$$

Question 188

A square loop of side 10 cm and resistance 0.7Ω is placed vertically in east-west plane. A uniform magnetic field of 0.20 T is set up across the plane in north east direction. The magnetic field is decreased to zero in 1 s at a steady rate. Then, magnitude of induced emf is $\sqrt{x} \times 10^{-3}$ V. The value of x is .

Numerical answer: _____

Enter the requested value (an integer; 0 decimal places). Use the units and scaling stated in the question.

Correct answer: 2

Source solution

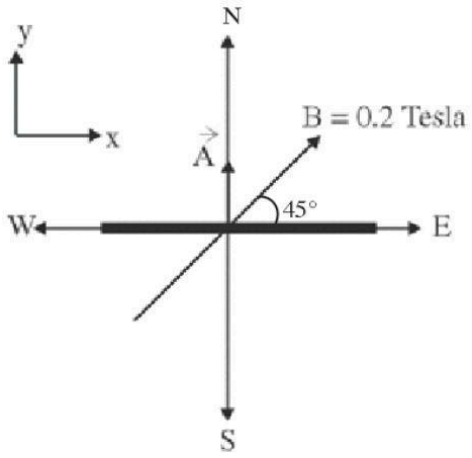

$$\vec{A} = (0.1)^2\hat{j}$$
$$\vec{B} = \frac{0.2}{\sqrt{2}}\hat{i} + \frac{0.2}{\sqrt{2}}\hat{j}$$

Magnitude of induced emf

$$e = \frac{\Delta\phi}{\Delta t} = \frac{\vec{B}\cdot\vec{A} - 0}{1} = \sqrt{2} \times 10^{-3} \text{ V}$$

Question 189

A square loop of side 15 cm being moved towards right at a constant speed of $\mathbf{2\ cm/s}$ as shown in figure. The front edge enters the 50 cm wide magnetic field at $t = 0$. The value of induced emf in the loop at $\mathbf{t = 10\ s}$ will be :

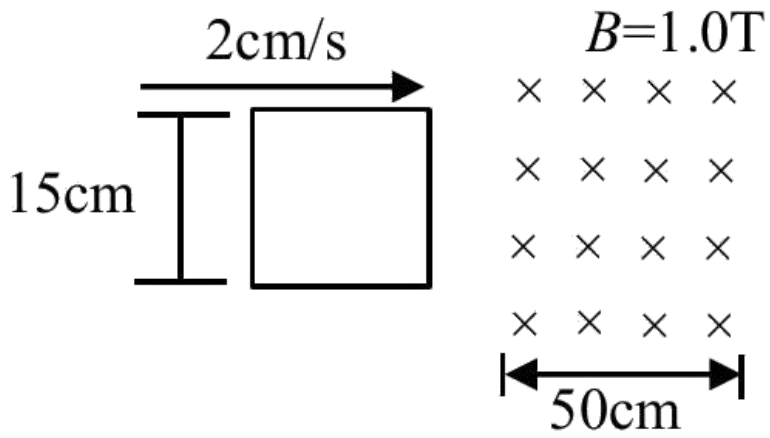

A. 0.3 mV

B. 4.5 mV

C. zero

D. 3 mV

Correct answer: C

Source solution

Sol.

At $t = 10\,\mathbf{s}$, the entire loop is inside the uniform magnetic field.

Hence, the magnetic flux linked with the loop remains constant.

$$\phi = BA = \text{constant}$$

Therefore,

$$e = -\frac{d\phi}{dt}.$$

Since

$$\frac{d\phi}{dt} = 0,$$

$$e = 0.$$

Thus,

$$\boxed{e = 0}$$

because there is no change in magnetic flux through the loop when it is completely inside the magnetic field region.

Question 190

A wire of length 1 m moving with velocity $8\ \mathrm{m/s}$ at right angles to a magnetic field of 2 T . The magnitude of induced emf, between the ends of wire will be

A. 20 V

B. 8 V

C. 12 V

D. 16 V

Correct answer: D

Source solution

Sol.

The motional emf induced in a conductor moving perpendicular to a magnetic field is

$$\mathcal{E} = B\ell v.$$

Given,

$$B = 2\,\mathrm{T}, \qquad \ell = 8\,\mathrm{m}, \qquad v = 1\,\mathrm{m\,s^{-1}}.$$

Therefore,

$$\mathcal{E} = 2 \times 8 \times 1.$$

$$\boxed{\mathcal{E} = 16\ \mathrm{V}}$$

Question 191

A conducting circular loop of radius $\frac{10}{\sqrt{\pi}}\ \mathbf{cm}$ is placed perpendicular to a uniform magnetic field of 0.5 T . The magnetic field is decreased to zero in 0.5 s at a steady rate. The induced emf in the circular loop at 0.25 s is:

A. $\mathbf{emf} = 1\mathbf{mV}$

B. $\mathbf{emf} = 5\mathbf{mV}$

C. $\mathbf{emf} = 100\mathbf{mV}$

D. $\mathbf{emf} = 10\mathbf{mV}$

Correct answer: D

Source solution

$$\varepsilon = -\frac{d\phi}{dt}$$

$$\phi = BA$$

$$\varepsilon = -A\frac{dB}{dt}$$

$$= -\pi R^2\left(\frac{0-B}{\Delta t}\right)$$

$$= \frac{\pi R^2 B}{\Delta t}$$

$$= \frac{\pi\left(\frac{10}{\sqrt{\pi}} \times 10^{-2}\right)^2 (0.5)}{0.5}$$

$$= 10^{-2}\,\mathrm{V}$$

$$= 10\,\mathrm{mV}$$

Question 192

A certain elastic conducting material is stretched into a circular loop. It is placed with its plane perpendicular to a uniform magnetic field $\mathbf{B = 0.8\ T}$. When released the radius of the loop starts shrinking at a constant rate of $\mathbf{2 cms^{-1}}$. The induced emf in the loop at an instant when the radius of the loop is 10 cm will be mV . (Given $\mathbf{g = 10\ ms^{-2}}$)

Numerical answer: _____

Enter the requested value (an integer; 0 decimal places). Use the units and scaling stated in the question.

Correct answer: 10

Source solution

(10)

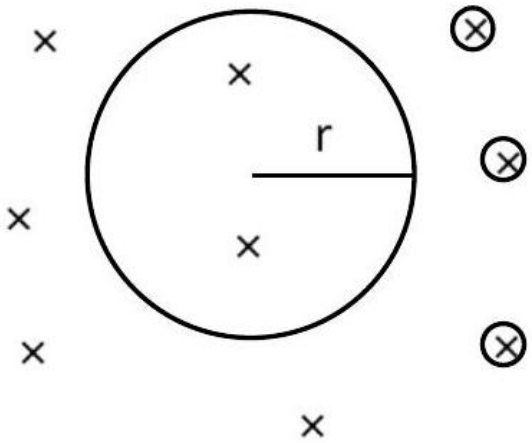

$B = 0.8T$

$\frac{dr}{dt} = 2\text{cms}^{-1}$

emf $= \frac{d\phi}{dt} = \frac{d(BA)}{dt}$

$emf = B\frac{d}{dt}\pi r^2 = \pi B(2r)\frac{dr}{dt}$

$emf = 2\pi Br \cdot (0.02)$

$= 2\pi(0.8)(0.1) \times 0.02$

$= 32\pi \times 10^{-4}$

$= 100.48 \times 10^{-4}$

$= 10.048 \times 10^{-3}$

$= 10.04\text{mV} \approx 10\text{mV}$

Question 193

A square loop of area $25\ \mathrm{cm}^2$ has a resistance of 10Ω. The loop is placed in uniform magnetic field of magnitude 40.0 T. The plane of loop is perpendicular to the magnetic field. The work done in pulling the loop out of the magnetic field slowly and uniformly in 1.0 sec , will be

A. $1.0 \times 10^{-3}\ \mathrm{J}$

B. $2.5 \times 10^{-3}\ \mathrm{J}$

C. $5 \times 10^{-3}\ \mathrm{J}$

D. $1.0 \times 10^{-4}\ \mathrm{J}$

Correct answer: A

Source solution

$$\ell = 5\,\mathrm{cm} = 0.05\,\mathrm{m}$$

$$v = \frac{\ell}{t} = \frac{0.05}{1} = 0.05\,\mathrm{m\,s^{-1}}$$

$$I = \frac{BLv}{R} = \frac{40 \times 0.05 \times 0.05}{10} = 0.01\,\mathrm{A}$$

$$F = BIL = 40 \times 0.01 \times 0.05 = 0.02\,\mathrm{N}$$

$$W = F\ell = 0.02 \times 0.05 = 10^{-3}\,\mathrm{J}$$

$$\boxed{10^{-3}\,\mathrm{J}}$$

Question 194

A conducting circular loop is placed in a uniform magnetic field of 0.4 T with its plane perpendicular to the field. Somehow, the radius of the loop starts expanding at a constant rate of $1\ \mathrm{mm/s}$. The magnitude of induced emf in the loop at an instant when the radius of the loop is 2 cm will be

$\mu\mathrm{V}$.

Numerical answer: _____

Enter the requested value (an integer; 0 decimal places). Use the units and scaling stated in the question.

Correct answer: 50

Source solution

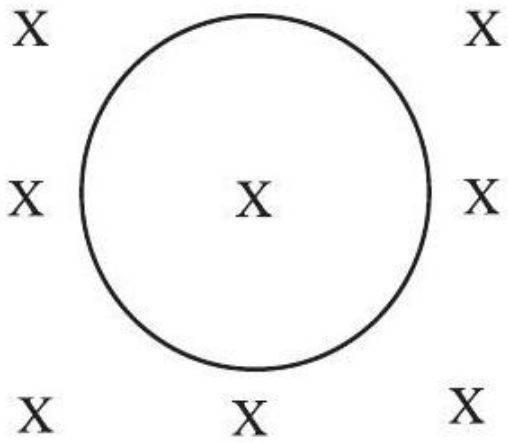

$\frac{dr}{dt} = 10^{-3}\ \mathrm{m/s}$

$\frac{dA}{dt} = 2\pi r \frac{dr}{dt}$

$\varepsilon = \left|\frac{-d\phi}{dt}\right| = \left|\frac{BdA}{dt}\right|$

$= 0.4 \times 2 \times \pi \times 2 \times 10^{-2} \times 10^{-3}\ \mathrm{V}$

$= 16\pi\mu\ \mathrm{V} = 50.24\mu\ \mathrm{V}$

Question 195

A square loop of side 2.0 cm is placed inside a long solenoid that has 50 turns per centimetre and carries a sinusoidally varying current of amplitude 2.5 A and angular frequency 700rads^{-1}. The central axes of the loop and solenoid coincide. The amplitude of the emf induced in the loop is $\mathbf{x} \times 10^{-4}$ V. The value of x is

(Take, $\pi = \frac{22}{7}$)

Numerical answer: _____

Enter the requested value (an integer; 0 decimal places). Use the units and scaling stated in the question.

Correct answer: 44

Source solution

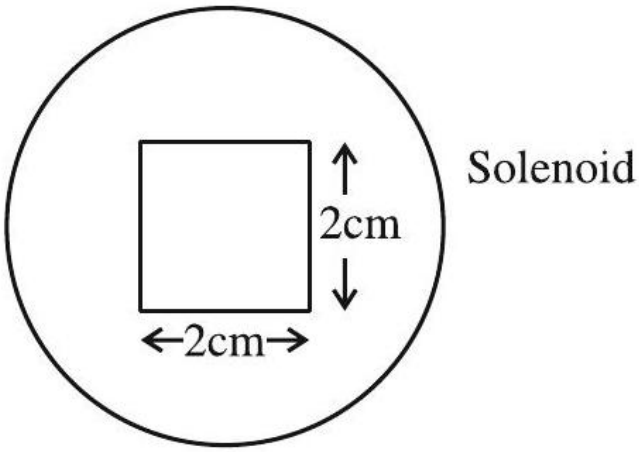

$$\mathrm{B}_{\text{due to solenoid}} = \mu_0 \mathrm{nI}$$
$$\Phi_{\text{through square}} = \mu_0 \mathrm{nI} \times \mathrm{A} \quad (\mathrm{A} = \text{Area})$$
$$\text{Emf} = \mu_0 \mathrm{nA} \times \frac{\mathrm{dI}}{\mathrm{dt}}$$
$$= \mu_0 \mathrm{nA} \times \mathrm{I}_0 \omega \cos \omega t$$
$$\text{Emf amplitude} = \mu_0 \mathrm{nA} \times \mathrm{I}_0 \omega$$

$$= 4\pi \times 10^{-7} \times \frac{50}{10^{-2}} \times 4 \times 10^{-4} \times 2.5 \times 700$$
$$= 44 \times 10^{-4} \text{ V}$$

Question 196

When a dc voltage of 100 V is applied to an inductor, a dc current of 5 A flows through it. When an ac voltage of 200 V peak value is connected to inductor, its inductive reactance is found to be $20\sqrt{3}\Omega$. The power dissipated in the circuit is W.

Numerical answer: _____

Enter the requested value (an integer; 0 decimal places). Use the units and scaling stated in the question.

Correct answer: 250

Source solution

For DC voltage

$$R = \frac{V}{I} = \frac{100}{5} = 20\Omega$$

for AC voltage

$$X_L = 20\sqrt{3}\Omega$$
$$R = 20\Omega$$
$$Z = \sqrt{X_L^2 + R^2} = \sqrt{3 \times 400 + 400} = 40\Omega$$
$$\text{Power } = i_{rms}^2 R$$
$$= \left(\frac{V_{rms}}{Z}\right)^2 \times R = \left(\frac{\frac{200}{\sqrt{2}}}{40}\right)^2 \times 20 = 250 \text{ W}$$

Question 197

For a given series LCR circuit it is found that maximum current is drawn when value of variable capacitance is 2.5 nF . If resistance of 200Ω and 100 mH inductor is being used in the given circuit. The frequency of ac source is $\times 10^3$ Hz. (given $\pi^2 = 10$)

Numerical answer: _____

Enter the requested value (an integer; 0 decimal places). Use the units and scaling stated in the question.

Correct answer: 10

Source solution

for maximum current, circuit must be in resonance.

$$f_0 = \frac{1}{2\pi\sqrt{L \times C}}$$
$$f_0 = \frac{1}{2\pi\sqrt{100 \times 10^{-3} \times 2.5 \times 10^{-9}}}$$
$$= \frac{1}{2\pi\sqrt{25 \times 10^{-11}}}$$
$$= \frac{1}{2\pi \times 5} \times 10^5 \times \sqrt{10}\ \text{Hz}$$
$$= \frac{100}{10} \times 10^3\ \text{Hz}$$
$$f_0 = 10 \times 10^3\ \text{Hz}$$

Question 198

When a coil is connected across a 20 V dc supply, it draws a current of 5 A. When connected across a 20 V, 50 Hz ac supply, it draws a current of 4 A. The self-inductance of the coil is _____ mH. (Take $\pi = 3$.)

Numerical answer: _____

Enter the requested value (an integer; 0 decimal places). Use the units and scaling stated in the question.

Correct answer: 10

Source solution

The resistance is $R = 20/5 = 4\ \Omega$ and impedance $Z = 20/4 = 5\ \Omega$. Hence $X_L = \sqrt{25 - 16} = 3\ \Omega$ and $L = 3/(2 \times 3 \times 50) = 0.01$ H = 10 mH.

Question 199

The current in an inductor is given by $\mathrm{I} = (3\mathrm{t} + 8)$ where t is in second. The magnitude of induced emf produced in the inductor is 12 mV . The selfinductance of the inductor mH .

Numerical answer: _____

Enter the requested value (an integer; 0 decimal places). Use the units and scaling stated in the question.

Correct answer: 4

Source solution

$$I = 3t + 8$$
$$\varepsilon = 12\mathrm{mV}$$
$$|\varepsilon| = \mathrm{L}\left|\frac{\mathrm{dI}}{\mathrm{dt}}\right|$$
$$12 = \mathrm{L} \times 3$$
$$\mathrm{L} = 4\mathrm{mH}$$

Question 200

In a coil, the current changes from -2 A to +2 A in 0.2 s and induces an emf of 0.1 V . The selfinductance of the coil is :

A. 5 mH

B. 1 mH

C. 2.5 mH

D. 4 mH

Correct answer: A

Source solution

$$|\varepsilon| = \left| -L\frac{di}{dt} \right|$$

$$0.1 = L\left(\frac{2-(-2)}{0.2}\right)$$

$$0.1 = L\left(\frac{4}{0.2}\right)$$

$$L = \frac{0.1 \times 0.2}{4}$$

$$L = 5 \times 10^{-3}\,\mathrm{H}$$

$$\boxed{L = 5\,\mathrm{mH}}$$

Question 201

Find the mutual inductance in the arrangement, when a small circular loop of wire of radius ' R ' is placed inside a large square loop of wire of side ($L \gg R$). The loops are coplanar and their centers coincide :

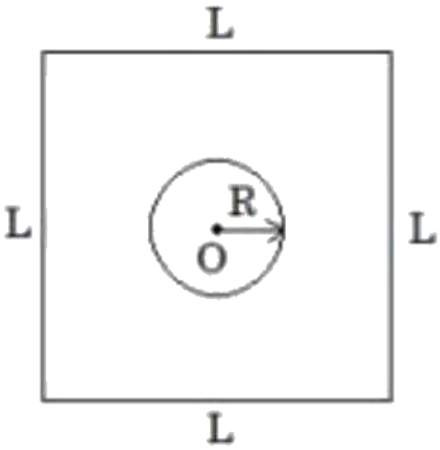

A. $M=\frac{\sqrt{2}\mu_0 R^2}{L}$

B. $M=\frac{2\sqrt{2}\mu_0 R}{L^2}$

C. $M=\frac{\sqrt{2}\mu_0 R}{L^2}$

D. $M=\frac{2\sqrt{2}\mu_0 R^2}{L}$

Correct answer: D

Source solution

Sol.

Magnetic flux linked with the circular loop due to current I_1 in the square loop is

$$\phi_2 = MI_1.$$

Also,

$$\phi_2 = B_1 A_2,$$

where B_1 is the magnetic field at the centre due to the square loop and

$$A_2 = \pi R^2.$$

Hence,

$$M = \frac{B_1 A_2}{I_1}.$$

Magnetic field at the centre due to one side of the square is

$$B_{AB} = \frac{\mu_0 I_1}{4\pi (L/2)} (\sin 45^\circ + \sin 45^\circ).$$

Therefore,

$$B_1 = 4B_{AB} = 4\left[\frac{\mu_0 I_1}{2\pi L}\left(\frac{1}{\sqrt{2}} + \frac{1}{\sqrt{2}}\right)\right] = \frac{2\sqrt{2}\,\mu_0 I_1}{\pi L}.$$

Substituting into

$$M = \frac{B_1 A_2}{I_1},$$

$$M = \frac{1}{I_1}\left(\frac{2\sqrt{2}\,\mu_0 I_1}{\pi L}\right)(\pi R^2).$$

$$\boxed{M = \frac{2\sqrt{2}\,\mu_0 R^2}{L}}$$

Question 202

A small square loop of side ' a ' and one turn is placed inside a larger square loop of side b and one turn ($b \gg a$). The two loops are coplanar with their centres coinciding. If a current I is passed in the square loop of side ' b ', then the coefficient of mutual inductance between the two loops is :

A. $\frac{\mu_0}{4\pi} 8\sqrt{2} \frac{a^2}{b}$

B. $\frac{\mu_0}{4\pi} \frac{8\sqrt{2}}{a}$

C. $\frac{\mu_0}{4\pi} 8\sqrt{2} \frac{\mathrm{b}^2}{\mathrm{a}}$

D. $\frac{\mu_0}{4\pi} \frac{8\sqrt{2}}{\mathrm{b}}$

Correct answer: A

Source solution

Sol.

Magnetic field at the centre due to one side of the square is

$$B_1 = \frac{\mu_0}{4\pi} \cdot \frac{I}{b/2} \cdot 2 \sin 45^\circ.$$

Hence, the total magnetic field due to all four sides is

$$B = 4B_1 = 4 \left[\frac{\mu_0}{4\pi} \cdot \frac{I}{b/2} \cdot 2 \sin 45^\circ \right].$$

$$B = \frac{2\sqrt{2}\,\mu_0 I}{\pi b}.$$

Magnetic flux through the square loop of side a is

$$\phi = Ba^2 = \frac{2\sqrt{2}\,\mu_0 I}{\pi b}\, a^2.$$

Therefore, the mutual inductance is

$$M = \frac{\phi}{I} = \frac{2\sqrt{2}\,\mu_0 a^2}{\pi b}.$$

$$M = \frac{\mu_0}{4\pi}\left(8\sqrt{2}\,\frac{a^2}{b}\right).$$

$$\boxed{M = \frac{\mu_0}{4\pi} \cdot 8\sqrt{2}\,\frac{a^2}{b}}$$

Question 203

Two conducting circular loops A and B are placed in the same plane with their centres coinciding as shown in figure. The mutual inductance between them is:

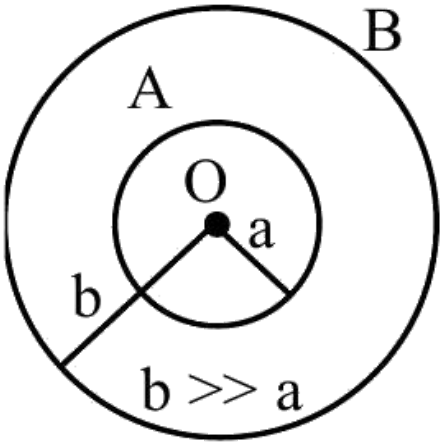

A. $\frac{\mu_0 \pi a^2}{2b}$

B. $\frac{\mu_0}{2\pi} \cdot \frac{b^2}{a}$

C. $\frac{\mu_0 \pi b^2}{2a}$

D. $\frac{\mu_0}{2\pi} \cdot \frac{a^2}{b}$

Correct answer: A

Source solution

$$\phi = Mi$$

$$\phi = BA$$

$$B = \frac{\mu_0 i}{2b}$$

$$A = \pi a^2$$

$$Mi = \frac{\mu_0 i}{2b}\pi a^2$$

$$\boxed{M = \frac{\mu_0 \pi a^2}{2b}}$$

Question 204

A small square loop of wire of side ℓ is placed inside a large square loop of wire of side L ($\mathbf{L} = \ell^2$). The loops are coplanar and their centers coinside. The value of the mutual inductance of the system is $\sqrt{\mathbf{x}} \times 10^{-7}\mathbf{H}$, where $\mathbf{x} =$.

Numerical answer: _____

Enter the requested value (an integer; 0 decimal places). Use the units and scaling stated in the question.

Correct answer: 128

Source solution

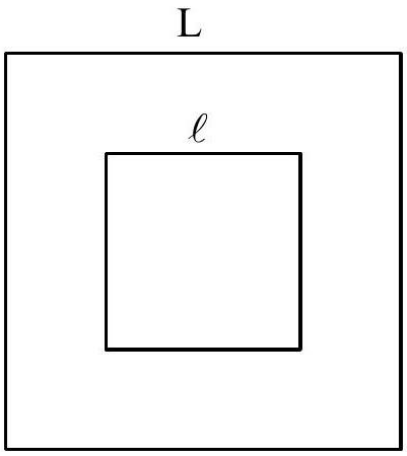

Flux linkage for inner loop.

$\phi = \mathbf{B}_{\text{center}} \cdot \ell^2$

$= 4 \times \frac{\mu_0 \mathrm{i}}{4\pi \frac{\mathrm{L}}{2}} (\sin 45 + \sin 45) \ell^2$

$\phi = 2\sqrt{2} \frac{\mu_0 \mathrm{i}}{\pi \mathrm{L}} \ell^2$

$\mathbf{M} = \frac{\phi}{\mathrm{i}} = \frac{2\sqrt{2}\mu_0 \ell^2}{\pi \mathrm{L}} = 2\sqrt{2} \frac{\mu_0}{\pi}$

$= 2\sqrt{2} \frac{4\pi}{\pi} \times 10^{-7}$

$= 8\sqrt{2} \times 10^{-7}\mathrm{H}$

$= \sqrt{128} \times 10^{-7}\mathrm{H}$

$\mathbf{x} = 128$

Question 205

In a series LCR circuit, a resistor of 300Ω, a capacitor of 25 nF and an inductor of 100 mH are used. For maximum current in the circuit, the angular frequency of the ac source is $\times 10^4$ radians s^{-1}.

Numerical answer: _____

Enter the requested value (an integer; 0 decimal places). Use the units and scaling stated in the question.

Correct answer: 2

Source solution

$$\omega = \frac{1}{\sqrt{LC}}$$
$$\omega = \frac{1}{\sqrt{25\times10^{-9}\times100\times10^{-3}}}$$
$$\omega = \frac{10^{+6}}{5\times10} = 2$$

Question 206

Match List-I with List-II.

List-I	List-II
(A) $\oint \vec{B} \cdot \vec{dl} = \mu_0 i_c + \mu_0 \varepsilon_0 \frac{d\phi_E}{dt}$	(IV) Ampere–Maxwell law
(B) $\oint \vec{E} \cdot \vec{dl} = \frac{d\phi_B}{dt}$	(III) Faraday law
(C) $\oint \vec{E} \cdot \overrightarrow{dA} = \frac{Q}{\varepsilon_0}$	(I) Gauss' law for electricity
(D) $\oint \vec{B} \cdot \overrightarrow{dA} = 0$	(II) Gauss' law for magnetism

Choose the correct answer from the options given below:

A. A-IV, B-I, C-III, D-II

B. A-II, B-III, C-I, D-IV

C. A-IV, B-III, C-I, D-II

D. A-I, B-II, C-III, D-IV

Correct answer: C

Source solution

Sol. Ampère-Maxwell law

$$\oint \vec{B} \cdot \vec{dl} = \mu_0 I_c + \mu_0 \varepsilon_0 \frac{d\phi_E}{dt}$$

Faraday's law

$$\oint \vec{E} \cdot \vec{dl} = \frac{d\phi_B}{dt}$$

Gauss' law for electricity

$$\oint \vec{E} \cdot \overrightarrow{dA} = \frac{Q}{\varepsilon_0}$$

Gauss' law for magnetism

$$\oint \vec{B} \cdot \overrightarrow{dA} = 0$$

Question 207

A small square loop of wire of side l is placed inside a large square loop of wire $L(L \gg l)$. Both loops are coplanar and their centres coincide at point O as shown in figure. The mutual inductance of the system is :

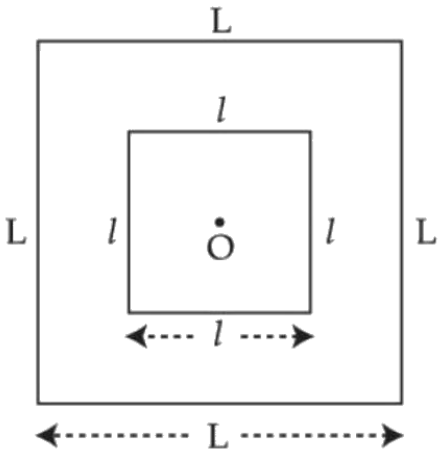

A. $\frac{2\sqrt{2}\mu_0 L^2}{\pi \ell}$

B. $\frac{\mu_0 \ell^2}{2\sqrt{2}\pi L}$

C. $\frac{2\sqrt{2}\mu_0 \ell^2}{\pi L}$

D. $\frac{\mu_0 L^2}{2\sqrt{2}\pi \ell}$

Correct answer: C

Source solution

Sol. Assuming current I in outer loop magnetic field at centre $= 4 \times \frac{\mu_0 I}{4\pi\left(\frac{L}{2}\right)} \times (2\sin 45^\circ) = \frac{2\sqrt{2}\mu_0 I}{\pi L}$

$$M = \frac{\text{Flux through inner loop}}{I}$$

$$M = \frac{2\sqrt{2}\mu_0 \ell^2}{\pi L}$$

Question 208

Match List-I with List-II.

List-I	List-II
(A) Gauss's law of magnetostatics	(II) $\oint \vec{B} \cdot \vec{da} = 0$
(B) Faraday's law of electromagnetic induction	(III) $\oint \vec{E} \cdot \vec{dl} = -\frac{d}{dt} \int \vec{B} \cdot \vec{da}$
(C) Ampere's law	(IV) $\oint \vec{B} \cdot \vec{dl} = \mu_0 I$
(D) Gauss's law of electrostatics	(I) $\oint \vec{E} \cdot \vec{da} = \frac{1}{\varepsilon_0} \int \rho \, dV$

Choose the correct answer from the options given below:

A. A-I, B-III, C-IV, D-II

B. A-III, B-IV, C-I, D-II

C. A-IV, B-II, C-III, D-I

D. A-II, B-III, C-IV, D-I

Correct answer: D

Source solution

(A) Gauss's law of magnetostatics $\rightarrow$ (II)

$$\oint \vec{B} \cdot d\vec{a} = 0$$

(B) Faraday's law of electromagnetic induction $\rightarrow$ (III)

$$\oint \vec{E} \cdot d\vec{l} = -\frac{d}{dt} \int \vec{B} \cdot d\vec{a}$$

(C) Ampere's law $\rightarrow$ (IV)

$$\oint \vec{B} \cdot d\vec{l} = \mu_0 I$$

(D) Gauss's law of electrostatics $\rightarrow$ (I)

$$\oint \vec{E} \cdot d\vec{a} = \frac{1}{\varepsilon_0} \int \rho \, dV$$

$$\boxed{(A)-(II),\ (B)-(III),\ (C)-(IV),\ (D)-(I)}$$

Question 209

Match List-I with List-II.

List-I	List-II
(a) Gauss's Law in Electrostatics	(i) $\oint \vec{E} \cdot d\vec{s} = \frac{q}{\epsilon_0}$
(b) Faraday's Law	(ii) $\oint \vec{E} \cdot d\vec{l} = -\frac{d\phi_B}{dt}$
(c) Gauss's Law in Magnetism	(iii) $\oint \vec{B} \cdot d\vec{A} = 0$
(d) Ampere-Maxwell Law	(iv) $\oint \vec{B} \cdot d\vec{l} = \mu_0 i_c + \mu_0 \epsilon_0 \frac{d\phi_E}{dt}$

Choose the correct answer from the options given below:

A. A-IV, B-I, C-II, D-III

B. A-II, B-III, C-IV, D-I

C. A-III, B-IV, C-I, D-II

D. A-I, B-II, C-III, D-IV

Correct answer: A

Source solution

(a) Gauss's Law in Electrostatics $\rightarrow$ (i)

$$\oint \vec{E} \cdot d\vec{S} = \frac{q}{\varepsilon_0}$$

(b) Faraday's Law $\rightarrow$ (ii)

$$\oint \vec{E} \cdot d\vec{l} = -\frac{d\phi_B}{dt}$$

(c) Gauss's Law in Magnetism $\rightarrow$ (iii)

$$\oint \vec{B} \cdot d\vec{A} = 0$$

(d) Ampere-Maxwell Law $\rightarrow$ (iv)

$$\oint \vec{B} \cdot d\vec{l} = \mu_0 i_c + \mu_0 \varepsilon_0 \frac{d\phi_E}{dt}$$

$$\boxed{(a)-(i),\ (b)-(ii),\ (c)-(iii),\ (d)-(iv)}$$

Alternating Current

Question 210

For the given figures, choose the correct options:(a)(b) $220\ \text{V}, 50\ \text{Hz}$

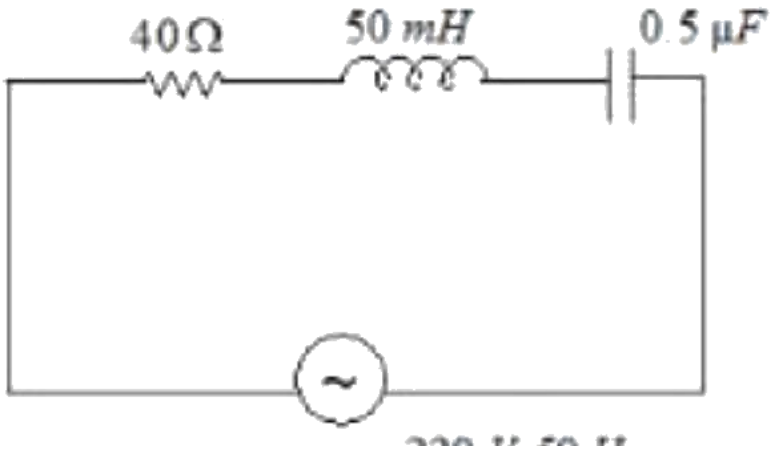

A. At resonance, current in (b) is less than that in (a)

B. The rms current in circuit (b) can never be larger than that in (a)

C. The rms current in figure(a) is always equal to that in figure (b)

D. The rms current in circuit (b) can be larger than that in (a)

Correct answer: B

Source solution

$$I_{\text{rms}} = \frac{V_{\text{rms}}}{R} = \frac{220}{40} = 5.5\ \text{A}$$

$$\text{In (b)}, X_L \neq X_C$$

$$Z = \sqrt{R^2 + (X_L - X_C)^2} > R$$

$$I_{\text{rms}} = \frac{V_{\text{rms}}}{Z} < \frac{220}{40}$$

Hence I_{rms} in (b) cannot exceed that in (a).

Question 211

At a certain temperature, the degrees of freedom per molecule for gas is 8 . The gas performs 150 J of work when it expands under constant pressure. The amount of heat absorbed by the gas will be

J.

Numerical answer: _____

Enter the requested value (an integer; 0 decimal places). Use the units and scaling stated in the question.

Correct answer: 750

Source solution

$$\mathbf{W = nR\Delta T = 150\ J}$$
$$\mathbf{Q = \left(\frac{f}{2} + 1\right)nR\Delta T = \left(\frac{8}{2} + 1\right)150 = 750\ J}$$

Question 212

A series LCR circuit is subjected to an AC signal of $\mathbf{200\ V, 50\ Hz}$. If the voltage across the inductor $\mathbf{(L = 10mH)}$ is 31.4 V , then the current in this circuit is ..... :

A. 68 A

B. 63 A

C. 10 A

D. 10 mA

Correct answer: C

Source solution

Sol. Voltage across inductor $\mathbf{V_L} = IX_L$

$$
\begin{aligned}
&31.4 = I[L\omega] \\
&31.4 = I[L(2\pi f)] \\
&31.4 = I\left[10 \times 10^{-3}(2 \times \pi) \times 50\right] \\
&\Rightarrow I = 10\,\mathrm{A}
\end{aligned}
$$

Question 213

A LCR circuit is at resonance for a capacitor C , inductance L and resistance R . Now the value of resistance is halved keeping all other parameters same. The current amplitude at resonance will be now:

A. Zero

B. double

C. same

D. halved

Correct answer: B

Source solution

$$\text{At resonance,}$$

$$Z = R$$

$$I = \frac{V}{R}$$

$$R \to \frac{R}{2}$$

$$I = \frac{V}{R/2}$$

$$I = 2\frac{V}{R}$$

$$I \to 2I$$

Current becomes doubled.

Question 214

Given below are two statements :Statement I: In an LCR series circuit, current is maximum at resonance.Statement II : Current in a purely resistive circuit can never be less than that in a series LCR circuit when connected to same voltage source.In the light of the above statements, choose the correct from the options given below :

A. Statement I is true but Statement II is false

B. Statement I is false but Statement II is true

C. Both Statement I and Statement II are true

D. Both Statement I and Statement II are false

Correct answer: C

Source solution

Statement-I:

$$I_m = \frac{V_m}{\sqrt{R^2 + (X_L - X_C)^2}}$$

at resonance $X_L = X_C$. Thus,

$$I_m = \frac{V_m}{R} \quad \because \textbf{Impedance is minimum, therefore } I \textbf{ is maximum at resonance.}$$

Statement-II:

$$I = \frac{V}{R}$$

in a purely resistive circuit.

Question 215

A alternating current at any instant is given by $\mathbf{i} = \left[6 + \sqrt{56}\sin\left(100\pi t + \frac{\pi}{3}\right)\right]$ A. The rms value of the current is A.

Numerical answer: _____

Enter the requested value (an integer; 0 decimal places). Use the units and scaling stated in the question.

Correct answer: 8

Source solution

$$I_{\text{rms}} = \sqrt{\frac{\int i^2 dt}{\int dt}}$$
$$\mathrm{I_{rms}} = \sqrt{(6)^2 + \frac{(\sqrt{56})^2}{2}}$$
$$= \sqrt{36 + 28}$$
$$= \sqrt{64}$$
$$= 8\ \mathrm{A}$$

Electromagnetic Waves

Questions 216-219 / 4 selected / 1.3% practice weight / Consolidate

Question 216

An antenna is mounted on a 400 m tall building. What will be the wavelength of signal of signal that can be radiated effectively by the transmission tower upto a range of 44 km ?

A. 37.8 m

B. 605 m

C. 75.6 m

D. 302 m

Correct answer: B

Source solution

$$d = \sqrt{2Rh}$$

where

$$R = 6.4 \times 10^6\,\mathrm{m}, \qquad h = 400\,\mathrm{m}.$$

Thus, the maximum line-of-sight range of the transmitting antenna is

$$d_t = \sqrt{2(6.4 \times 10^6)(400)} \approx 71.6\,\mathrm{km}.$$

For effective transmission up to a range of $44\,\mathrm{km}$, the wavelength radiated efficiently by a tower antenna is of the order of the antenna height:

$$h \approx \frac{\lambda}{4}.$$

Therefore,

$$\lambda = 4h.$$

Substituting $h \approx 151\,\mathrm{m}$ (effective antenna length),

$$\lambda \approx 4 \times 151 \approx 605\,\mathrm{m}.$$

Hence,

$$\boxed{\lambda \approx 605\,\mathrm{m}}.$$

Question 217

A plane electromagnetic wave with frequency of 30 MHz travels in free space. At particular point in space and time, electric field is $6\ \mathrm{V/m}$. The magnetic field at this point will be $\mathrm{x} \times 10^{-8}\ \mathrm{T}$. The value of x is .

Numerical answer: _____

Enter the requested value (an integer; 0 decimal places). Use the units and scaling stated in the question.

Correct answer: 2

Source solution

$|\mathrm{B}| = \frac{|\mathrm{E}|}{\mathrm{C}} = \frac{6}{3\times10^8}$
$= 2 \times 10^{-8}\ \mathrm{T}$
$\therefore \mathrm{x} = 2$

Question 218

Match List I with List II of Electromagnetic waves with corresponding wavelength range :

List I
(A) Microwave
(B) Ultraviolet
(C) X-Ray
(D) Infra-red

List II

(I) 400 nm to 1 nm
(II) 1 nm to 10^{-3} nm
(III) 1 mn to 700 nm
(IV) 0.1 m to 1 mm

Choose the correct answer from the options given below :

A. -(I), (B)-(IV), (C)-(II), (D)-(III)

B. (A)-(IV), (B)-(I), (C)-(II), (D)-(III)

C. (A)-(IV), (B)-(II), (C)-(I), (D)-(III)

D. (A)-(IV), (B)-(I), (C)-(III), (D)-(II)

Correct answer: B

Source solution

Increasing order of wave length

X-ray	1 nm to 10^{-3} nm
Ultra Violet	400 nm to 1 nm
Intra red	1 mm to 700 nm
Micro wave	0.1 m to 1 mm

Question 219

A plane EM wave is propagating along x direction. It has a wavelength of 4 mm . If electric field is in y direction with the maximum magnitude of $60 \mathrm{Vm}^{-1}$, the equation for magnetic field is:

A. $\mathrm{B_z = 60 \sin\left[\frac{\pi}{2}\left(x - 3 \times 10^8 t\right)\right]\hat{k}T}$

B. $\mathrm{B_z = 2 \times 10^{-7} \sin\left[\frac{\pi}{2} \times 10^3\left(x - 3 \times 10^8 t\right)\right]\hat{k}T}$

C. $\mathrm{B_x = 60 \sin\left[\frac{\pi}{2}\left(x - 3 \times 10^8 t\right)\right]\hat{i}T}$

D. $\mathrm{B_z = 2 \times 10^{-7} \sin\left[\frac{\pi}{2}\left(x - 3 \times 10^8 t\right)\right]\hat{k}T}$

Correct answer: B

Source solution

Sol.

Given,

$$\lambda = 4\,\mathrm{mm} = 4 \times 10^{-3}\,\mathrm{m}$$

and the wave propagates along the $+x$-direction.

Electric field is along $+y$-direction with amplitude

$$E_0 = 60\,\mathrm{V\ m^{-1}}.$$

For an electromagnetic wave,

$$B_0 = \frac{E_0}{c} = \frac{60}{3 \times 10^8} = 2 \times 10^{-7}\,\mathrm{T}.$$

Also,

$$\vec{E} \times \vec{B} = \hat{i}.$$

Since $\vec{E}$ is along $\hat{j}$, $\vec{B}$ must be along $\hat{k}$.

Now,

::contentReference[oaicite:0]{index=0}

$$k = \frac{2\pi}{\lambda} = \frac{2\pi}{4 \times 10^{-3}} = \frac{\pi}{2} \times 10^{3}\ \mathrm{m}^{-1}.$$

Hence the magnetic field is

$$\boxed{\vec{B} = 2 \times 10^{-7} \sin\left[\frac{\pi}{2} \times 10^{3}\left(x - 3 \times 10^{8} t\right)\right] \hat{k}\ \mathrm{T}}$$

Ray Optics and Optical Instruments

Questions 220-246 / 27 selected / 9.0% practice weight / Focus first

Question 220

A thin cylindrical rod of length 10 cm is placed horizontally on the principle axis of a concave mirror of focal length 20 cm . The rod is placed in a such a way that mid point of the rod is at 40 cm from the pole of mirror. The length of the image formed by the mirror will be $\frac{x}{3}$ cm. The value of x is .

Numerical answer: _____

Enter the requested value (an integer; 0 decimal places). Use the units and scaling stated in the question.

Correct answer: 32

Source solution

32

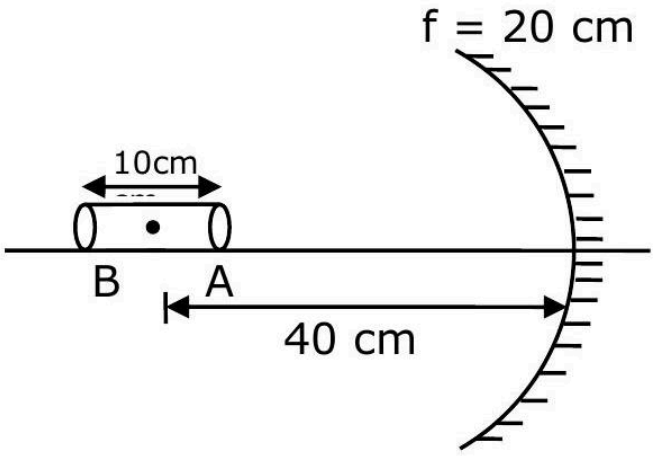

Image of end A:

$\mathbf{u} = -35$ cm

$\mathbf{f} = -20$ cm

$\mathbf{v} = ?$

$v = \frac{uf}{u-f}$

$= \frac{-35\times-20}{-35+20}$

$= \frac{-35\times-20}{-15}$

$$\mathbf{v} = -\frac{140}{3}$$

Image of end B :

$\mathbf{u} = -45\ \mathbf{cm}$

$\mathbf{v} = ?$

$\mathbf{f} = -20\ \mathbf{cm}$

$v = \frac{uf}{u-f}$

$= \frac{-45\times-20}{-45+20}$

$= \frac{-45\times-20}{-25}$

$v = -36$

$\therefore$ length of image $= \left|-36 + \frac{140}{3}\right|$

$$= \left|-\frac{108+140}{3}\right|$$

$$= \frac{32}{3}$$

$\therefore$ The value of $\mathbf{x} = 32$

Question 221

A ray of light passing through a prism $(\mu = \sqrt{3})$ suffers minimum deviation. It is found that the angle of incidence is double the angle of refraction within the prism. Then, the angle of prism is ___ (in degrees)

Numerical answer: _____

Enter the requested integer (0 decimal places).

Correct answer: 60

Source solution

At minimum deviation $r_1 = r_2 = \frac{A}{2}$ Also given $i = 2r_1 = A$ Now 1. $\sin i = \sqrt{3}\sin r_1$

$$1 \sin A = \sqrt{3}\sin\frac{A}{2}$$
$$\Rightarrow 2\sin\frac{A}{2}\cos\frac{A}{2} = \sqrt{3}\sin\frac{A}{2}$$
$$\Rightarrow \cos\frac{A}{2} = \frac{\sqrt{3}}{2} \Rightarrow \frac{A}{2} = 30^\circ$$
$$\Rightarrow A = 60^\circ$$

Question 222

The diffraction pattern of a light of wavelength 400 nm diffracting from a slit of width 0.2 mm is focused on the focal plane of a convex lens of focal length 100 cm . The width of the 1st secondary maxima will be :

A. 2 mm

B. 2 cm

C. 0.02 mm

D. 0.2 mm

Correct answer: A

Source solution

$$\text{Width of the first secondary maximum} = \frac{\lambda D}{a}$$

Given,

$$a = 0.2 \times 10^{-3}\,\text{m}, \qquad \lambda = 400 \times 10^{-9}\,\text{m}, \qquad D = 100 \times 10^{-2}\,\text{m}.$$

Therefore,

$$\text{Width of the first secondary maximum} = \frac{400 \times 10^{-9}}{0.2 \times 10^{-3}} \times 100 \times 10^{-2}$$

$$= \frac{400}{0.2} \times 10^{-6}$$

$$= 2000 \times 10^{-6}\,\text{m}$$

$$= 2 \times 10^{-3}\,\text{m} = 2\,\text{mm}.$$

$\boxed{2\,\text{mm}}$

Question 223

A thin plano convex lens made of glass of refractive index 1.5 is immersed in a liquid of refractive index 1.2. When the plane side of the lens is silver coated for complete reflection, the lens immersed in the liquid behaves like a concave mirror of focal length 0.2 m . The radius of curvature of the curved surface of the lens is :-

A. 0.15 m

B. 0.10 m

C. 0.20 m

D. 0.25 m

Correct answer: B

Source solution

$$\frac{\mu_2}{v} = \frac{\mu_2 - \mu_1}{R}$$

$$\frac{1.5}{v} = \frac{1.5 - 1.2}{R} = \frac{0.3}{R}$$

$$v = \frac{1.5R}{0.3} = 5R$$

For the second surface,

$$\frac{\mu_1}{f} - \frac{\mu_2}{v} = \frac{\mu_1 - \mu_2}{-R}$$

$$\frac{1.2}{f} - \frac{1.5}{5R} = \frac{1.2 - 1.5}{-R} = \frac{0.3}{R}$$

$$\frac{1.2}{f} = \frac{0.3}{R} + \frac{0.3}{R} = \frac{0.6}{R}$$

$$f = \frac{1.2R}{0.6} = 2R$$

Given,

$$f = 20\,\text{cm}$$

$$R = \frac{f}{2} = 10\,\text{cm} = 0.1\,\text{m}$$

$$\boxed{R = 0.1\,\text{m}}$$

Question 224

In the diagram given below, there are three lenses formed. Considering negligible thickness of each of them as compared to $[R_1]$ and $[R_2]$, i.e., the radii of curvature for upper and lower surfaces of the glass lens, the power of the combination is

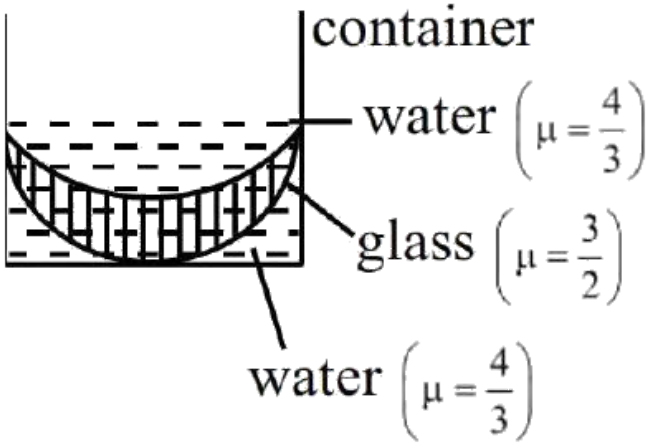

A. $-\frac{1}{6}\left(\frac{1}{|R_1|}+\frac{1}{|R_2|}\right)$

B. $-\frac{1}{6}\left(\frac{1}{|R_1|}-\frac{1}{|R_2|}\right)$

C. $\frac{1}{6}\left(\frac{1}{|R_1|}+\frac{1}{|R_2|}\right)$

D. $\frac{1}{6}\left(\frac{1}{|R_1|}-\frac{1}{|R_2|}\right)$

Correct answer: B

Source solution

$$\Rightarrow p_{eq} = p_1 + p_2 + p_3$$

$$\Rightarrow p_1 = \left(\frac{4}{3}-1\right)\left(\frac{1}{\infty}-\frac{1}{-|R_1|}\right)$$

$$\Rightarrow p_1 = \frac{1}{3|R_1|}$$

$$\Rightarrow p_2 = \left(\frac{1}{2}\right)\left(\frac{1}{-|R_1|}-\frac{1}{-|R_2|}\right)$$

$$\Rightarrow p_2 = \frac{1}{2}\left(\frac{1}{|R_2|}-\frac{1}{|R_1|}\right)$$

$$\Rightarrow p_3 = \left(\frac{1}{3}\right)\left(\frac{1}{-|R_2|} - \frac{1}{\infty}\right) = -\frac{1}{3|R_2|}$$

$$\Rightarrow p_{eq} = \frac{1}{3}\left(\frac{1}{|R_1|} - \frac{1}{|R_2|}\right) - \frac{1}{2}\left(\frac{1}{|R_1|} - \frac{1}{|R_2|}\right) = -\frac{1}{6}\left(\frac{1}{|R_1|} - \frac{1}{|R_2|}\right)$$

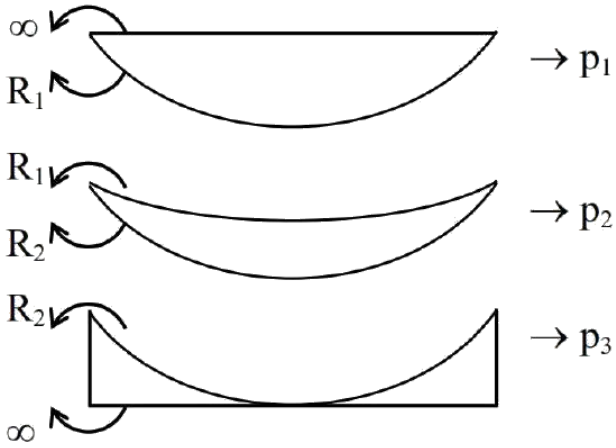

Question 225

Two identical symmetric double convex lenses of focal length f are cut into two equal parts $\mathbf{L_1}, \mathbf{L_2}$ by AB plane and $\mathbf{L_3}, \mathbf{L_4}$ by XY plane as shown in figure respectively. The ratio of focal lengths of lenses $\mathbf{L_1}$ and $\mathbf{L_3}$ isOR

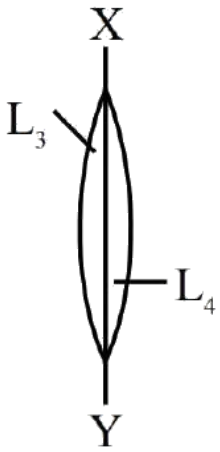

A. $1:4$

B. $1:1$

C. $2:1$

D. $1:2$

Correct answer: D

Source solution

$$P = \frac{1}{f}$$

If lenses L_1 and L_2 have power P,

$$f_{L_1} = f_{L_2} = f$$

If lenses L_3 and L_4 have power $\frac{P}{2}$,

$$f_{L_3} = f_{L_4} = 2f$$

Therefore,

$$f_{L_1} : f_{L_3} = f : 2f$$

Question 226

A plano-convex lens having radius of curvature of first surface 2 cm exhibits focal length of $\mathbf{f_1}$ in air. Another plano-convex lens with first surface radius of curvature 3 cm has focal length of $\mathbf{f_2}$ when it is immersed in a liquid of refractive index 1.2. If both the lenses are made of same glass of refractive index 1.5, the ratio of f_1 and f_2 will be :-

A. $3:5$

B. $1:3$

C. $1:2$

D. $2:3$

Correct answer: B

Source solution

$$\frac{1}{f_1} = (\mu - 1)\left(\frac{1}{R_1} - \frac{1}{R_2}\right)$$

$$= (1.5 - 1)\left(\frac{1}{2} - 0\right)$$

$$\frac{1}{f_1} = 0.25$$

$$f_1 = 4\,\text{cm}$$

For the lens in medium,

$$\frac{1}{f_2} = \left(\frac{\mu_l}{\mu_m} - 1\right)\left(\frac{1}{3} - 0\right)$$

$$= \left(\frac{1.5}{1.2} - 1\right)\frac{1}{3}$$

$$= \frac{0.3}{1.2} \cdot \frac{1}{3}$$

$$= \frac{1}{12}$$

$$f_2 = 12\,\text{cm}$$

$$f_1 : f_2 = 4 : 12 = 1 : 3$$

Question 227

For the thin convex lens, the radii of curvature are at 15 cm and 30 cm respectively. The focal length the lens is 20 cm . The refractive index of the material is :

A. 1.2

B. 1.4

C. 1.5

D. 1.8

Correct answer: C

Source solution

Sol.

$$\frac{1}{f}=\left(\frac{\mu_{lens}}{\mu_{air}}-1\right)\left(\frac{1}{R_1}-\frac{1}{R_2}\right)$$

$$\Rightarrow \frac{1}{+20}=\left(\frac{\mu}{1}-1\right)\left(\frac{1}{+15}-\frac{1}{-30}\right)$$

$$\Rightarrow \frac{1}{20}=(\mu-1)\left(\frac{3}{30}\right)$$

$$\Rightarrow \mu-1=\frac{1}{2}$$

$$\Rightarrow \mu=1+\frac{1}{2}=\frac{3}{2}=1\cdot 5$$

Question 228

Curved surfaces of a plano-convex lens of refractive index μ_1 and a plano-concave lens of refractive index μ_2 have equal radius of curvature as shown in figure. Find the ratio of radius of curvature to the focal length of the combined lenses.

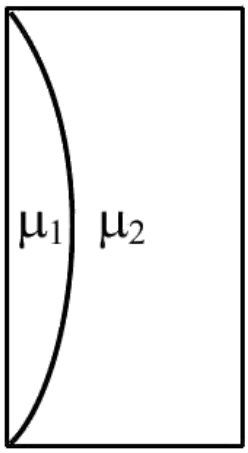

A. $\frac{1}{\mu_2-\mu_1}$

B. $\mu_1-\mu_2$

C. $\frac{1}{\mu_1-\mu_2}$

D. $\mu_2-\mu_1$

Correct answer: B

Source solution

Sol.

$$\frac{1}{f_1}=(\mu_1-1)\left(\frac{1}{R}\right)$$

$$\frac{1}{f_2}=(\mu_2-1)\left(-\frac{1}{R}\right)$$

$$\frac{1}{f_1}+\frac{1}{f_2}=\frac{1}{f_{eq}}=\frac{(\mu_1-1)-(\mu_2-1)}{R}$$

$$\frac{1}{f_{eq}}=\frac{(\mu_1-\mu_2)}{R}$$

$$\frac{R}{f_{eq}} = (\mu_1 - \mu_2)$$

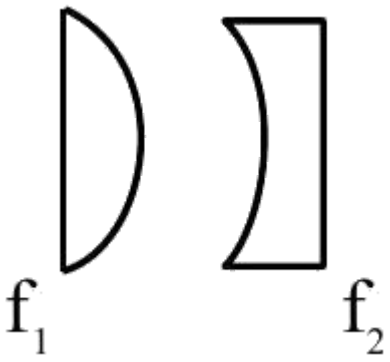

Question 229

A plano-convex lens (focal length f_2, refractive index μ_2, radius of curvature R) fits exactly into a plano-concave lens (focal length f_1, refractive index μ_1, radius of curvature R). Their plane surfaces are parallel to each other. Then, the focal length of the combination will be :

A. $f_1 - f_2$

B. $f_1 + f_2$

C. $\frac{\mathrm{R}}{\mu_2 - \mu_1}$

D. $\frac{2f_1 f_2}{f_1 + f_2}$

Correct answer: C

Source solution

$$\frac{1}{F} = \frac{1}{f_1} + \frac{1}{f_2}$$

$$= \frac{1-\mu_1}{R} + \frac{\mu_2 - 1}{R}$$

$$= \frac{1 - \mu_1 + \mu_2 - 1}{R}$$

$$= \frac{\mu_2 - \mu_1}{R}$$

$$\therefore F = \frac{R}{\mu_2 - \mu_1}$$

$$\boxed{\frac{1}{F} = \frac{\mu_2 - \mu_1}{R}}$$

Question 230

A convex lens is put 10 cm from a light source and it makes a sharp image on a screen, kept 10 cm from the lens. Now a glass block (refractive index 1.5) of 1.5 cm thickness is placed in contact with the light source. To get the sharp image again, the screen is shifted by a distance d . Then d is :

A. 0.55 cm away from the lens

B. 1.1 cm away from the lens

C. 0.55 cm towards the lens

D. 0

Correct answer: A

Source solution

Sol.

$$\frac{1}{v}-\frac{1}{u}=\frac{1}{f} \Rightarrow \frac{1}{10}-\frac{1}{-10}=\frac{1}{f} \Rightarrow f=5\,\text{cm}$$

Shift due to slab $=t\left(1-\frac{1}{\mu}\right)$ in the direction of incident ray

$$=1.5\left(1-\frac{2}{3}\right)=0.5$$

Again,

$$\frac{1}{v}-\frac{1}{-9.5}=\frac{1}{5} \Rightarrow \frac{1}{u}=\frac{1}{5}-\frac{2}{19}=\frac{9}{95} \Rightarrow v=\frac{95}{9}=10.55\,\text{cm}$$

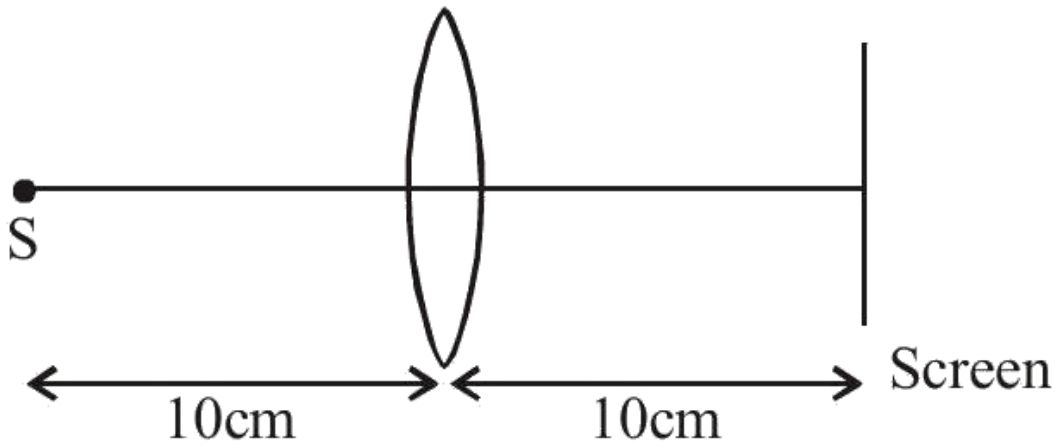

Question 231

A symmetric thin biconvex lens is cut into four equal parts by two planes AB and CD as shown in figure. If the power of original lens is 4D then the power of a part of the divided lens is

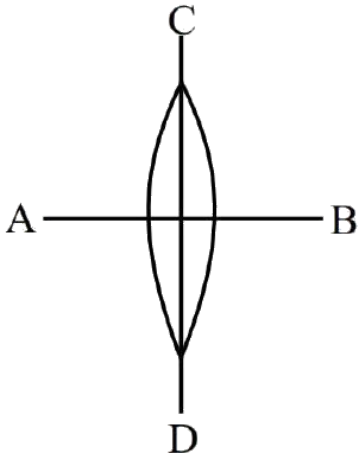

A. 8 D

B. 4 D

C. D

D. 2 D

Correct answer: D

Source solution

$$\frac{1}{f_1} = (\mu - 1)\left(\frac{1}{R} - \frac{-1}{R}\right)$$

$$= (\mu - 1)\frac{2}{R}$$

$$P_1 = \frac{1}{f_1} = 4D$$

For the second lens,

$$\frac{1}{f_2} = (\mu - 1)\left(\frac{1}{R} - 0\right)$$

$$= (\mu - 1)\frac{1}{R}$$

$$P_2 = \frac{1}{f_2} = \frac{P_1}{2}$$

$$= \frac{4}{2} = 2\,D$$

$$\boxed{P_2 = 2\,D}$$

Question 232

A convex lens mode of glass (refractive index = 1.5) has focal length 24 cm in air. When it is totally immersed in water (refractive index = $\mathbf{1.33}$), its focal length changes to

A. 72 cm

B. 96 cm

C. 24 cm

D. 48 cm

Correct answer: B

Source solution

Sol.

$$\frac{1}{8}=\left(\frac{\mu_{\ell}}{\mu_{\mathrm{S}}}-1\right)\left[\frac{1}{\mathrm{R}_1}-\frac{1}{\mathrm{R}_2}\right]$$

$$\frac{1}{24}=(1.5-1)\left[\frac{2}{\mathrm{R}}\right] \quad \text{(i)}$$

$$\frac{1}{\mathrm{f}'}=\left(\frac{1.5}{1.33}-1\right)\left(\frac{2}{\mathrm{R}}\right)$$

$$\frac{1}{\mathrm{f}'}=\left(\frac{1.5\cdot 3}{4}-1\right)\frac{2}{\mathrm{R}} \quad \text{(ii)}$$

(i) divided by (ii)

$$\frac{\mathrm{f}'}{24}=4$$

$\mathbf{f'=96\,cm}$

Question 233

The thickness at the centre of a plano convex lens is 3 mm and the diameter is 6 cm . If the speed of light in the material of the lens is $2 \times 10^8 \mathrm{~ms}^{-1}$. The focal length of the lens is..... .

A. 0.30 cm

B. 15 cm

C. 1.5 cm

D. 30 cm

Correct answer: D

Source solution

Sol.

$$R^2 = r^2 + (R - t)^2$$

$$R^2 = r^2 + R^2 + t^2 - 2Rt$$

Neglecting t^2, we get

$$R = \frac{r^2}{2t}$$

$\therefore \frac{1}{f} = (\mu - 1)\left(\frac{1}{R} - \frac{1}{\infty}\right) = \frac{\mu - 1}{R}$

$$f = \frac{R}{\mu - 1} = \frac{r^2}{2t(\mu - 1)} = \frac{\left(3 \times 10^{-2}\right)^2}{2 \times 3 \times 10^{-3}\left(\frac{3}{2} - 1\right)}$$

$$= \frac{9 \times 10^{-4}}{6 \times 10^{-3} \cdot 1} \times 2$$

$$f = 0.3\,\mathrm{m} = 30\,\mathrm{cm}$$

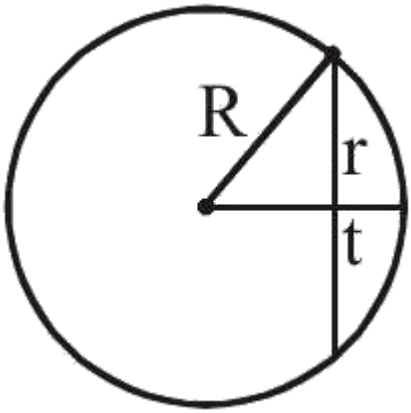
R
r
t

Question 234

In a long glass tube, mixture of two liquids A and B with refractive indices 1.3 and 1.4 respectively, forms a convex refractive meniscus towards A . If an object placed at 13 cm from the vertex of the meniscus in A forms an image with a magnification of ' -2 ' then the radius of curvature of meniscus is :

A. 1 cm

B. $\frac{1}{3}$ cm

C. $\frac{2}{3}$ cm

D. $\frac{4}{3}$ cm

Correct answer: C

Source solution

Sol.

$$\frac{n_2}{v}-\frac{n_1}{u}=\frac{n_2-n_1}{R}$$

$$\frac{1.4}{V}-\frac{1.3}{-13}=\frac{0.1}{R}$$

$$\frac{1.4}{V}=\frac{1-R}{10R}$$

$$\frac{1.4}{v}=\frac{1-R}{10R}$$

$$m=\frac{\frac{v}{n_2}}{\frac{u}{n_1}}$$

$$-2\times\frac{-13}{1.3}=\frac{10R}{1-R}$$

$$R=\frac{2}{3}\text{ cm}$$

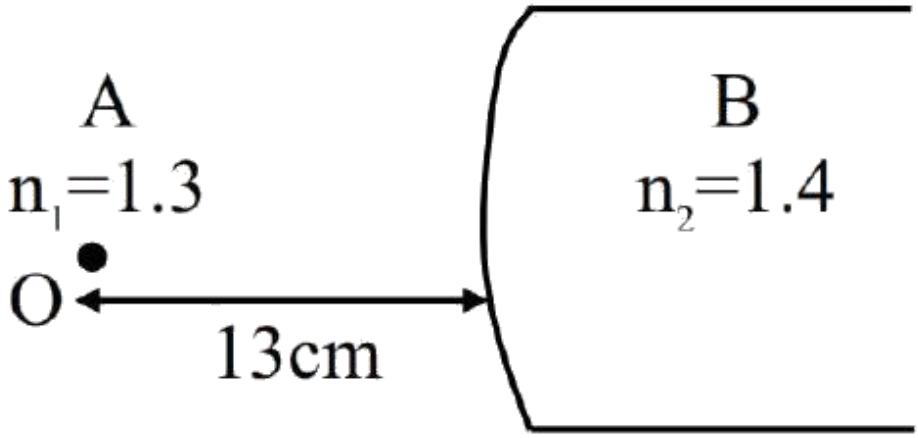

Question 235

A plano convex lens of refractive index μ_1 and focal length f_1 is kept in contact with another plano concave lens of refractive index μ_2 and focal length f_2. If the radius of curvature of their spherical faces is R each and $f_1 = 2f_2$, then μ_1 and μ_2 are related as :

A. $\mu_1 + \mu_2 = 3$

B. $2\mu_1 - \mu_2 = 1$

C. $2\mu_2 - \mu_1 = 1$

D. $3\mu_2 - 2\mu_1 = 1$

Correct answer: B

Source solution

Sol.

$$\frac{1}{2f_2} = \frac{1}{f_1} = (\mu_1 - 1)\left(\frac{1}{\infty} - \frac{1}{-R}\right)$$

$$\frac{1}{f_2} = (\mu_2 - 1)\left(\frac{1}{-R} - \frac{1}{\infty}\right)$$

$$\frac{(\mu_1 - 1)}{R} = \frac{(\mu_2 - 1)}{2R}$$

$$2\mu_2 - \mu_1 = 1$$

Question 236

A monochromatic light of wavelength $6000\AA$ is incident on the single slit of width 0.01 mm . If the diffraction pattern is formed at the focus of the convex lens of focal length 20 cm , the linear width of the central maximum is :

A. 60 mm

B. 24 mm

C. 120 mm

D. 12 mm

Correct answer: B

Source solution

Sol. Linear width

$$W = \frac{2\lambda d}{a} = \frac{2 \cdot 6 \times 10^{-7} \cdot 0.2}{1 \times 10^{-5}}$$
$$= 2.4 \times 10^{-2} = 24\,\text{mm}$$

Question 237

Given is a thin convex lens of glass (refractive index μ) and each side having radius of curvature R. One side is polished for complete reflection. At what distance from the lens, an object be placed on the optic axis so that the image gets formed on the object itself.

A. R/μ

B. $R/(2\mu - 3)$

C. $\mu \mathrm{R}$

D. $R/(2\mu - 1)$

Correct answer: D

Source solution

$$P_{\text{eq}} = 2P_l + P_m$$

$$\frac{1}{f_{\text{eq}}} = \frac{2}{f_l} - \frac{1}{f_m}$$

$$= \frac{4(\mu - 1)}{R} + \frac{2}{R}$$

$$= \frac{4\mu - 2}{R}$$

$$f_{\text{eq}} = \frac{R}{4\mu - 2}$$

$$= \frac{R}{2(2\mu - 1)}$$

Since the equivalent system contains a mirror,

$$R_{\mathrm{eq}} = 2f_{\mathrm{eq}}$$

$$= 2\left(\frac{R}{2(2\mu - 1)}\right)$$

$$\boxed{R_{\mathrm{eq}} = \frac{R}{2\mu - 1}}$$

Question 238

A convex lens of refractive index 1.5 and focal length 18 cm in air is immersed in water. The change in focal length of the lens will be cm
(Given refractive index of water $= \frac{4}{3}$)

Numerical answer: _____

Enter the requested value (an integer; 0 decimal places). Use the units and scaling stated in the question.

Correct answer: 54

Source solution

54

$\frac{1}{f} = (\mu - 1)\left(\frac{1}{R_1} - \frac{1}{R_2}\right)$

$\frac{1}{18} = (1.5 - 1)\frac{2}{R} \ldots.$

$$\frac{1}{f} = \left(\frac{1.5}{\frac{4}{3}} - 1\right)\frac{2}{R} \ldots\ldots \quad (1)$$

Div eq. by eq. 2

$\frac{f}{18} = \frac{0.5 \times 8}{1}$

$f = 72 \text{ cm}$

change $= 72 - 18$

$= 54$

Question 239

The power of a lens (biconvex) is $\mathbf{1.25\ m^{-1}}$ in particular medium. Refractive index of the lens is 1.5 and radii of curvature are 20 cm and 40 cm respectively. The refractive index of surrounding medium :

A. 1.0

B. $\frac{9}{7}$

C. $\frac{3}{2}$

D. $\frac{4}{3}$

Correct answer: B

Source solution

$$P = \left(\frac{\mu_l}{\mu_m} - 1\right)\left(\frac{1}{R_1} - \frac{1}{R_2}\right)$$

Given,

$$P = 1.25\,\mathrm{D}, \qquad \mu_l = 1.5$$

$$R_1 = +20\,\mathrm{cm} = 0.2\,\mathrm{m}$$

$$R_2 = -40\,\mathrm{cm} = -0.4\,\mathrm{m}$$

$$1.25 = \left(\frac{1.5}{\mu_m} - 1\right)\left(\frac{1}{0.2} - \frac{1}{-0.4}\right)$$

$$1.25 = \left(\frac{1.5}{\mu_m} - 1\right)(5 + 2.5)$$

$$1.25 = 7.5\left(\frac{1.5}{\mu_m} - 1\right)$$

$$\frac{1.5}{\mu_m} - 1 = \frac{1.25}{7.5} = \frac{1}{6}$$

$$\frac{1.5}{\mu_m} = \frac{7}{6}$$

$$\mu_m = 1.5 \times \frac{6}{7} = \frac{9}{7}$$

$$\boxed{\mu_m = \frac{9}{7} \approx 1.286}$$

Question 240

A thin prism P_1 with angle 4° made of glass having refractive index 1.54, is combined with another thin prism $\mathbf{P_2}$ made of glass having refractive index 1.72 to get dispersion without deviation. The angle of the prism $\mathbf{P_2}$ in degrees is

A. 4

B. 3

C. $16/3$

D. 1.5

Correct answer: B

Source solution

$$\delta_{\text{net}} = 0$$

For a thin prism,

$$\delta = (\mu - 1)A$$

Hence,

$$(\mu_1 - 1)A_1 = (\mu_2 - 1)A_2$$

$$(1.54 - 1) \times 4 = (1.72 - 1)A_2$$

$$0.54 \times 4 = 0.72A_2$$

$$A_2 = \frac{2.16}{0.72}$$

$$A_2 = 3^\circ$$

Question 241

The refractive index of a converging lens is 1.4. What will be the focal length of this lens if it is placed in a medium of same refractive index ? (Assume the radii of curvature of the faces of lens are R_1 and R_2 respectively)

A. 1

B. Infinite

C. $\frac{R_1 R_2}{R_1 - R_2}$

D. Zero

Correct answer: B

Source solution

Sol.

$$\frac{1}{\mathrm{F}} = \left[\frac{\mu_{\mathrm{L}}}{\mu_{\mathrm{S}}} - 1\right]\left[\frac{1}{\mathrm{R}_1} - \frac{1}{\mathrm{R}_2}\right]$$

If $\mu_{\mathrm{L}} = \mu_{\mathrm{S}} \Rightarrow \frac{1}{\mathrm{F}} = 0 \Rightarrow \mathrm{F} = \infty$

Question 242

One plano-convex and one plano-concave lens of same radius of curvature ' R ' but of different materials are joined side by side as shown in the figure. If the refractive index of the material of 1 is μ_1 and that of 2 is μ_2, then the focal length of the combination is :

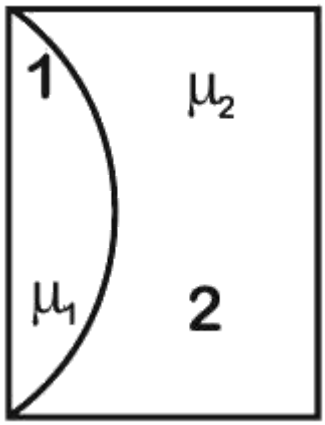

A. $\frac{R}{2(\mu_1-\mu_2)}$

B. $\frac{R}{2-(\mu_1-\mu_2)}$

C. $\frac{R}{\mu_1-\mu_2}$

D. $\frac{2R}{\mu_1-\mu_2}$

Correct answer: C

Source solution

Sol. Focal length of plano-convex lens:

$$f_1 = \frac{R}{(\mu_1 - 1)}$$

Focal length of plano-concave lens:

$$f_2 = \frac{-R}{(\mu_2 - 1)}$$

For the combination of two lenses:

$$\frac{1}{f_{eq}} = \frac{1}{f_1} + \frac{1}{f_2} = \frac{\mu_1 - 1}{R} - \frac{\mu_2 - 1}{R}$$

$$= \frac{\mu_1 - \mu_2}{R}$$

$\therefore \quad f_{eq} = \frac{R}{\mu_1 - \mu_2}$

Question 243

When a beam of white light is allowed to pass through convex lens parallel to principal axis, the different colours of light converge at different point on the principle axis after refraction. This is called:

A. Spherical aberration

B. Polarisation

C. Chromatic aberration

D. Scattering

Correct answer: C

Source solution

Different colours have different refractive indices

$\therefore$ they are focused at different points by a lens.

This defect of a lens is called

Chromatic Aberration

(due to dispersion of light by the lens)

Question 244

A convex lens of focal length 40 cm forms an image of an extended source of light on a photoelectric cell. A current I is produced. The lens is replaced by another convex lens having the same diameter but focal length 20 cm . The photoelectric current now is :

A. $\frac{I}{2}$

B. 4 I

C. 2 I

D. I

Correct answer: D

Source solution

$$\text{Photocurrent} \propto \text{number of photoelectrons emitted per second}$$

$$\text{Photocurrent depends on the total light energy falling on the photocell.}$$

Both lenses have the same diameter.

$$\therefore \text{Both collect the same amount of light from the source.}$$

Changing the focal length only changes the size and intensity distribution of the image, not the total light reaching the photocell.

$$\therefore \text{Number of emitted photoelectrons remains unchanged.}$$

$$\boxed{I' = I}$$

Question 245

A ray of light passes from a denser medium to a rarer medium at an angle of incidence i. The reflected and refracted rays make an angle of 90° with each other. The angle of reflection and refraction are respectively r and r'. The critical angle is given by :

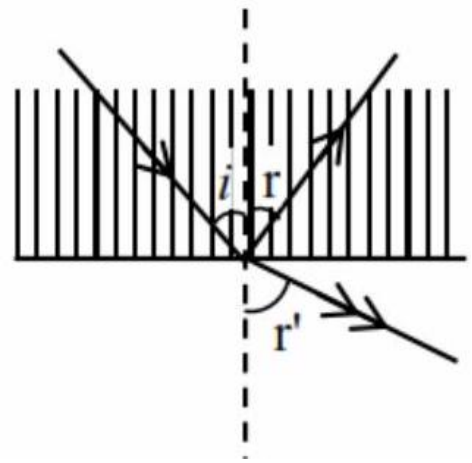

A. $\sin^{-1}(\cot r)$

B. $\tan^{-1}(\sin i)$

C. $\sin^{-1}(\tan r')$

D. $\sin^{-1}(\tan r)$

Correct answer: D

Source solution

$$r + r' + 90^\circ = 180^\circ \Rightarrow r' = 90 - r = 90 - i$$
$$n_1 \sin i = n_2 \sin r' = n_2 \sin(90 - i)$$
$$n_1 \sin i = n_2 \cos i \Rightarrow \tan i = \frac{n_2}{n_1}$$

Now $\sin C = \frac{n_2}{n_1} = \tan i$

$$\Rightarrow C = \sin^{-1}(\tan i) = \sin^{-1}(\tan r)$$

Question 246

An effective power of a combination of 5 identical convex lenses which are kept in contact along the principal axis is 25 D . Focal length of each of the convex lens is :

A. 20 cm

B. 50 cm

C. 500 cm

D. 25 cm

Correct answer: A

Source solution

Sol. We know that

$$\mathrm{P_{eq}} = \sum \mathrm{P_i}$$

Therefore, given all lenses are identical,

$$5\mathrm{P} = 25\mathrm{D}$$

Thus,

$$\mathrm{P} = 5\mathrm{D}$$

Consequently,

$$\frac{1}{\mathrm{f}} = 5 \Rightarrow \mathrm{f} = \frac{1}{5}\,\mathrm{m} = 20\,\mathrm{cm}$$

Hence option (1).

Wave Optics

Questions 247-276 / 30 selected / 10.0% practice weight / Focus first

Question 247

In YDSE path difference at a point on the screen is 8λ. Find ratio of intensity at this point with maximum intensity.

A. 0.533

B. 0.853

C. 0.234

D. 0.123

Correct answer: B

Source solution

In YDSE, the intensity at a point on the screen varies with the phase difference between the interfering light waves as:

$$I = I_0 \cos^2\left(\frac{\Delta\phi}{2}\right)$$

Here, $\Delta\phi =$ phase difference between the interfering waves and $I_0 =$ maximum intensity on the screen.

$$\frac{I}{I_0} = \cos^2\left[\frac{\frac{2\pi}{\lambda}\cdot\Delta x}{2}\right] = \cos^2\left(\frac{\pi}{8}\right)$$

$$\frac{I}{I_0} = 0.853$$

Question 248

A single slit of width a is illuminated by a monochromatic light of wavelength 600 nm . The value of 'a' for which first minimum appears at $\theta = 30^\circ$ on the screen will be :

A. $0.6\mu\ \mathrm{m}$

B. $1.2\mu\ \mathrm{m}$

C. $1.8\mu\ \mathrm{m}$

D. $3\mu\ \mathrm{m}$

Correct answer: B

Source solution

For the first minimum in single-slit diffraction,

$$a \sin\theta = \lambda$$

Given,

$$\theta = 30^\circ, \qquad \lambda = 600 \times 10^{-9}\ \mathrm{m}.$$

Therefore,

$$a \sin 30^\circ = 600 \times 10^{-9}\ \mathrm{m}$$

$$a = \frac{600 \times 10^{-9}\ \mathrm{m}}{\sin 30^\circ}$$

$$= \frac{600 \times 10^{-9}}{1/2}$$

$$= 1200 \times 10^{-9}\,\mathrm{m}$$

$$= 1.2 \times 10^{-6}\,\mathrm{m} = 1.2\,\mu\mathrm{m}.$$

$$\boxed{a = 1.2\,\mu\mathrm{m}}$$

Question 249

Young's double slit interference apparatus is immersed in a liquid of refractive index 1.44. It has slit separation of 1.5 mm . The slits are illuminated by a parallel beam of light whose wavelength in air is 690 nm . The fringe-width on a screen placed behind the plane of slits at a distance of 0.72 m , will be :

A. 0.23 mm

B. 0.33 mm

C. 0.63 mm

D. 0.46 mm

Correct answer: A

Source solution

$$\beta = \left(\frac{\lambda_0}{\mu}\right)\frac{D}{d}$$

Substituting the given values,

$$\beta = \frac{690 \times 10^{-9}\,\mathrm{m} \times 0.72}{1.44 \times 1.5 \times 10^{-3}\,\mathrm{m}}$$

$$= \frac{496.8 \times 10^{-9}}{2.16 \times 10^{-3}}$$

$$= 230 \times 10^{-6}\,\mathrm{m}$$

$$= 0.23 \times 10^{-3}\,\mathrm{m} = 0.23\,\mathrm{mm}.$$

$$\boxed{\beta = 0.23\,\mathrm{mm}}$$

Question 250

The figure shows a Young's double slit experimental setup. It is observed that when a thin transparent sheet of thickness t and refractive index μ is put in front of one of the slits, the central maximum gets shifted by a distance equal to n fringe widths. If the wavelength of light used is λ, t will be

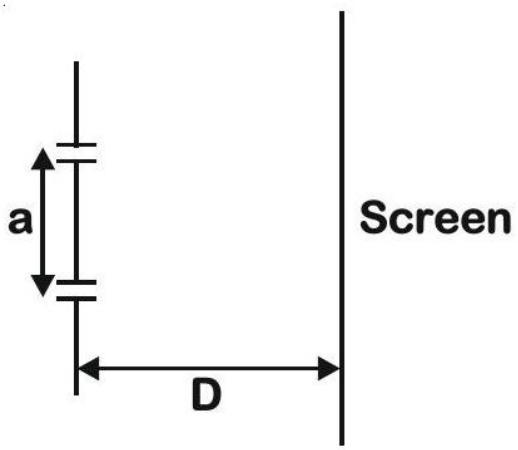

A. $\frac{n\lambda}{\mu-1}$

B. $\frac{2D\lambda}{a(\mu-1)}$

C. $\frac{nD\lambda}{a(\mu-1)}$

D. $\frac{D\lambda}{a(\mu-1)}$

The original exam question had no correct option and was marked BONUS. For this corrected practice version, option 1 has been replaced with the correct value; the original statement and the other three options are retained.

Correct answer: A

Source solution

The inserted sheet adds optical path $(\mu-1)t$. A shift of n fringe widths corresponds to path difference $n\lambda$. Thus $t = n\lambda/(\mu-1)$, independent of D and slit separation a.

Question 251

In a double slit experiment, when a thin film of thickness t having refractive index μ is introduced in front of one of the slits, the maximum at the centre of the fringe pattern shifts by one fringe width. The value of t is (λ is the wavelength of the light used) :

A. $\frac{2\lambda}{(\mu-1)}$

B. $\frac{\lambda}{2(\mu-1)}$

C. $\frac{\lambda}{(2\mu-1)}$

D. $\frac{\lambda}{(\mu-1)}$

Correct answer: D

Source solution

$$\mu t - t = \lambda$$

$$t(\mu - 1) = \lambda$$

$$t = \frac{\lambda}{\mu - 1}$$

Question 252

In Young's double slit experiment, light from two identical sources are superimposing on a screen. The path difference between the two lights reaching at a point on the screen is $\frac{7\lambda}{4}$. The ratio of intensity of fringe at this point with respect to the maximum intensity of the fringe is :

A. $1/2$

B. $3/4$

C. $1/3$

D. $1/4$

Correct answer: A

Source solution

$$\Delta x = \frac{7\lambda}{4}$$

$$\phi = \frac{2\pi}{\lambda}\Delta x = \frac{2\pi}{\lambda} \cdot \frac{7\lambda}{4} = \frac{7\pi}{2}$$

$$I = I_{\max}\cos^2\left(\frac{\phi}{2}\right)$$

$$\frac{I}{I_{\max}} = \cos^2\left(\frac{\phi}{2}\right) = \cos^2\left(\frac{7\pi}{4}\right)$$

$$= \cos^2\left(2\pi - \frac{\pi}{4}\right)$$

$$= \cos^2\left(\frac{\pi}{4}\right)$$

$$= \left(\frac{1}{\sqrt{2}}\right)^2 = \frac{1}{2}$$

$$\boxed{\frac{I}{I_{\max}} = \frac{1}{2}}$$

Question 253

The Young's double slit interference experiment is performed using light consisting of 480 nm and 600 nm wavelengths to form interference patterns. The least number of the bright fringes of 480 nm light that are required for the first coincidence with the bright fringes formed by 600 nm light is :-

A. 4

B. 8

C. 6

D. 5

Correct answer: D

Source solution

$$\frac{n_1\lambda_1 D}{d} = \frac{n_2\lambda_2 D}{d}$$

$$n_1\lambda_1 = n_2\lambda_2$$

Given,

$$\lambda_1 = 480\,\text{nm}, \qquad \lambda_2 = 600\,\text{nm}.$$

Therefore,

$$480\,n_1 = 600\,n_2$$

$$4n_1 = 5n_2.$$

For the minimum values of n_1 and n_2,

$$n_1 = 5, \qquad n_2 = 4.$$

Hence,

$$\boxed{n_{1,\min} = 5}$$

Question 254

In young's double slit experiment, the fringe width is 12 mm . If the entire arrangement is placed in water of refractive index $\frac{4}{3}$, then the fringe width becomes (in mm)

A. 16

B. 9

C. 48

D. 12

Correct answer: B

Source solution

For a given light wavelength corresponding to a medium of refractive index μ,

$$\lambda_{\text{med}} = \frac{\lambda_{\text{vacuum}}}{\mu}$$

and we know that fringe width

$$\beta = \frac{\lambda D}{d}$$

Therefore,

$$\beta_{\text{med}} = \frac{\beta_{\text{vacuum}}}{\mu} = \frac{12\,\text{mm}}{\frac{4}{3}} = 9\,\text{mm}$$

Question 255

The width of fringe is 2 mm on the screen in a double slits experiment for the light of wavelength of 400 nm . The width of the fringe for the light of wavelength 600 nm will be:

A. 4 mm

B. 1.33 mm

C. 3 mm

D. 2 mm

Correct answer: C

Source solution

$$\text{Fringe width } (\beta) = \frac{D\lambda}{d}$$

$$\Rightarrow \frac{\beta_2}{\beta_1} = \frac{\lambda_2}{\lambda_1}$$

$$\Rightarrow \frac{\beta_2}{2\,\text{mm}} = \frac{600\,\text{nm}}{400\,\text{nm}} = \frac{3}{2}$$

$$\Rightarrow \beta_2 = 3\,\text{mm}$$

Question 256

Interference fringes are observed on a screen by illuminating two thin slits 1 mm apart with a light source ($\lambda = 632.8\ \text{nm}$). The distance between the screen and the slits is 100 cm . If a bright fringe is observed on screen at a distance of 1.27 mm from the central bright fringe, then the path difference between the waves, which are reaching this point from the slits is close to:

A. $2.05\mu\ \text{m}$

B. 2.87 nm

C. 2 nm

D. $1.27\mu\ \text{m}$

Correct answer: D

Source solution

$$\text{Given:}\quad d = 1\,\text{mm},\quad \lambda = 632.8\,\text{nm},\quad D = 100\,\text{cm},\quad y = 1.27\,\text{mm}$$

$$\Delta x = d\sin\theta$$

Since θ is small,

$$\sin\theta \approx \tan\theta = \frac{y}{D}.$$

Therefore,

$$\Delta x = d\tan\theta = \frac{dy}{D}.$$

$$\Delta x = \frac{(1\times10^{-3}\,\text{m})(1.27\times10^{-3}\,\text{m})}{100\times10^{-2}\,\text{m}}$$

$$= 1.27\times10^{-6}\,\text{m} = 1.27\,\mu\text{m}.$$

$$\boxed{\Delta x = 1.27\,\mu\text{m}}$$

Question 257

Using Young's double slit experiment, a monochromatic light of wavelength $5000\,\text{\AA}$ produces fringes of fringe width 0.5 mm . If another monochromatic light of wavelength $6000\,\text{\AA}$ is used and the separation between the slits is doubled, then the new fringe width will be :

A. 0.5 mm

B. 1.0 mm

C. 0.6 mm

D. 0.3 mm

Correct answer: D

Source solution

$$\text{Fringe width} \qquad \beta = \frac{D\lambda}{d}$$

For

$$\lambda_1 = 5000\,\text{\AA},$$

$$\beta_1 = \frac{D}{d}\left(5000 \times 10^{-10}\right) = 5 \times 10^{-4}\,\text{m} \tag{I}$$

For

$$\lambda_2 = 6000\,\text{\AA}$$

and slit separation $2d$,

$$\beta_2 = \frac{D}{2d}\left(6000 \times 10^{-10}\right) = x. \tag{II}$$

Dividing Eq.~(II) by Eq.~(I),

$$\frac{\beta_2}{\beta_1} = \frac{\frac{D}{2d}(6000 \times 10^{-10})}{\frac{D}{d}(5000 \times 10^{-10})}$$

$$= \frac{6000}{2 \times 5000} = \frac{3}{5}.$$

Hence,

$$\frac{x}{5 \times 10^{-4}} = \frac{3}{5}.$$

$$x = \frac{3}{5}\left(5 \times 10^{-4}\right) = 3 \times 10^{-4}\,\mathrm{m}.$$

$$x = 0.3 \times 10^{-3}\,\mathrm{m} = 0.3\,\mathrm{mm}.$$

$$\boxed{\beta_2 = 3 \times 10^{-4}\,\mathrm{m} = 0.3\,\mathrm{mm}}$$

Question 258

In a double-slit experiment, green light ($5303\AA$) falls on a double slit having a separation of $19.44\mu\,\mathrm{m}$ and a width of $4.05\mu\,\mathrm{m}$. The number of bright fringes between the first and the second diffraction minima is :-

A. 09

B. 10

C. 04

D. 05

Correct answer: D

Source solution

Sol. For diffraction location of 1st minima

$$y_1 = \frac{D\lambda}{a} = 0.2469D\lambda$$

location of 2nd minima

$$y_2 = \frac{2D\lambda}{a} = 0.4938D\lambda$$

Now for interference
Path difference at P:

$$\frac{dy}{D} = 4.8\lambda$$

Path difference at Q:

$$\frac{dy}{D} = 9.6\lambda$$

So orders of maxima in between P and Q are

$$5, 6, 7, 8, 9$$

So 5 bright fringes are present between P and Q.

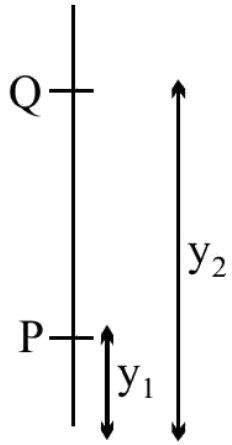
Q
P
y_2
y_1

Question 259

In a Young's double slit experiment, 16 fringes are observed in a certain segment of the screen when light of wavelength 700 nm is used. If the wavelength of light is changed to 400 nm , the number of fringes observed in the same segment of the screen would be:

A. 28

B. 24

C. 30

D. 18

Correct answer: A

Source solution

$$y = \frac{D\lambda}{d}$$

For the fringes of two wavelengths to coincide at the same position,

$$n_1\left(\frac{D\lambda_1}{d}\right) = n_2\left(\frac{D\lambda_2}{d}\right)$$

$$n_1\lambda_1 = n_2\lambda_2$$

$$\frac{n_1}{n_2} = \frac{\lambda_2}{\lambda_1}$$

$$n_2 = n_1\frac{\lambda_1}{\lambda_2}$$

$$= 16 \cdot \frac{700}{400} = 28$$

$$\boxed{n_2 = 28}$$

Question 260

In young's double slit experiment performed using a monochromatic light of wavelength λ, when a glass plate $(\mu = 1.5)$ of thickness $x\lambda$ is introduced in the path of the one of the interfering beams, the intensity at the position where the central maximum occurred previously remains unchanged. The value of x will be:

A. 3

B. 2

C. 1.5

D. 0.5

Correct answer: B

Source solution

Sol. Path difference at $\mathrm{O} = (\mu - 1)t$. If the intensity at O remains (maximum) unchanged, path difference must be $n\lambda$.

$$(\mu - 1)t = n\lambda$$

$$(1.5 - 1) \cdot x\lambda = n\lambda$$

$$\Rightarrow x = 2n$$

For $n = 1, x = 2$

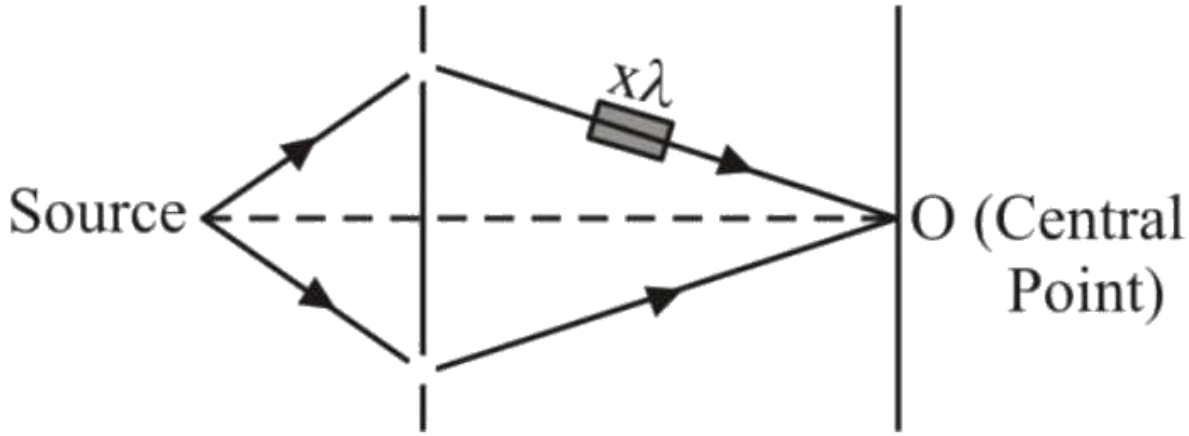
$x\lambda$
Source
O (Central Point)

Question 261

In a Young's double slit experiment, light of 500 nm is used to produce an interference pattern. When the distance between the slits is 0.05 mm , the angular width (in degree) of the fringes formed on the distance screen is close to :

A. 0.17°

B. 0.07°

C. 0.57°

D. 1.7°

Correct answer: C

Source solution

Sol. $B = \frac{\lambda D}{d}$

$$\theta = \frac{\beta}{D} = \left(\frac{\lambda}{d}\right)$$

$$\theta = \frac{500 \times 10^{-9}}{0.05 \times 10^{-3}}$$

$$\theta = \frac{5 \times 10^{-2}}{5} = \frac{5}{100 \times 5}$$

$$\theta^{\circ} = \frac{5}{100} \cdot \frac{180}{5 \cdot \pi}$$

$$\theta^{\circ} = 0.57^{\circ}$$

Question 262

In a Young's double slit experiment with slit separation 0.1 mm , one observes a bright fringe at angle $\frac{1}{40}$ rad by using light of wavelength λ_1. When the light of wavelength λ_2 is used a bright fringe is seen at the same angle in the same set up. Given that λ_1 and λ_2 are in visible range (380 nm to 740 nm), their values are :

A. $380\ \text{nm}, 500\ \text{nm}$

B. $625\ \text{nm}, 500\ \text{nm}$

C. $380\ \text{nm}, 525\ \text{nm}$

D. $400\ \text{nm}, 500\ \text{nm}$

Correct answer: B

Source solution

$$\text{Path difference}$$

$$d \sin\theta \approx d\theta = 0.1 \times \frac{1}{40}\ \text{mm} = 0.0025\ \text{mm} = 2500\ \text{nm}$$

For a bright fringe, the path difference must be an integral multiple of the wavelength. Therefore,

$$2500 = n\lambda_1 = m\lambda_2$$

Thus,

$$\lambda_1 = \frac{2500}{n} = \frac{2500}{4} = 625\ \text{nm}$$

and

$$\lambda_2 = \frac{2500}{m} = \frac{2500}{5} = 500\ \text{nm}$$

$$\boxed{\lambda_1 = 625\,\text{nm}, \qquad \lambda_2 = 500\,\text{nm}}$$

(for $n = 4$ and $m = 5$).

Question 263

In a Young's double slit experiment, the ratio of the slit's width is $4:1$. The ratio of the intensity of maxima to minima, close to the central fringe on the screen, will be :

A. $(\sqrt{3}+1)^4 : 16$

B. $4:1$

C. $25:9$

D. $9:1$

Correct answer: D

Source solution

Sol.

$$I_1 = 4I_0, \quad I_2 = I_0$$

$$\frac{I_{\max}}{I_{\min}} = \frac{\left(\sqrt{I_1}+\sqrt{I_2}\right)^2}{\left(\sqrt{I_1}-\sqrt{I_2}\right)^2} = \left(\frac{9}{1}\right)$$

Question 264

In Young's double slit arrangement, slits are separated by a gap of 0.5 mm , and the screen is placed at a distance of 0.5 m from them. The distance between the first and the third bright fringe formed when the slits are illuminated by a monochromatic light of $5890\AA$ is :-

A. $1178 \times 10^{-9}\ \mathrm{m}$

B. $1178 \times 10^{-6}\ \mathrm{m}$

C. $1178 \times 10^{-12}\ \mathrm{m}$

D. $5890 \times 10^{-7}\ \mathrm{m}$

Correct answer: B

Source solution

$$\beta = \frac{\lambda D}{d} = \frac{5890 \times 10^{-10} \times 0.5}{0.5 \times 10^{-3}}$$

$$= 5890 \times 10^{-7}\,\mathrm{m} = 589 \times 10^{-6}\,\mathrm{m}$$

The distance between the first and third bright fringes is

$$2\beta = 2 \times 589 \times 10^{-6}\,\mathrm{m}$$

$$= 1178 \times 10^{-6}\,\mathrm{m} = 1.178 \times 10^{-3}\,\mathrm{m} \qquad (2)$$

Question 265

The width of one of the two slits in a Young's double slit experiment is 4 times that of the other slit. The ratio of the maximum of the minimum intensity in the interference pattern is :

A. $9:1$

B. $16:1$

C. $1:1$

D. $4:1$

Correct answer: A

Source solution

Sol. Since intensity $\propto$ width of slit (ω), we have

$$I_1 = I, \quad I_2 = 4I$$

The minimum intensity is given by

$$I_{min} = \left(\sqrt{I_1} - \sqrt{I_2}\right)^2 = I$$

The maximum intensity is given by

$$I_{max} = \left(\sqrt{I_1} + \sqrt{I_2}\right)^2 = 9I$$

Thus, the ratio of maximum to minimum intensity is

$$\frac{I_{max}}{I_{min}} = \frac{9I}{I} = \frac{9}{1}$$

Question 266

In a Young's double slit experiment, the slits are placed 0.320 mm apart. Light of wavelength $\lambda = 500\ \text{nm}$ is incident on the slits. The total number of bright fringes that are observed in the angular range $-30^\circ \leq \theta \leq 30^\circ$ is:

A. 320

B. 641

C. 321

D. 640

Correct answer: B

Source solution

$$d \sin\theta = n\lambda$$

where d is the slit separation, λ is the wavelength, and n is the order of the maxima.

$$0.32 \times 10^{-3} \sin 30^\circ = n\,(500 \times 10^{-9})$$

$$0.32 \times 10^{-3} \times \frac{1}{2} = n\,(500 \times 10^{-9})$$

$$n = \frac{0.16 \times 10^{-3}}{500 \times 10^{-9}} = 320$$

Hence, the total number of maxima observed in the angular range

$$-30^\circ \leq \theta \leq 30^\circ$$

is

$$N = 320 + 1 + 320 = 641.$$

Question 267

The width of one of the two slits in a Young's double slit experiment is three times the other slit. If the amplitude of the light coming from a slit is proportional to the slit-width, the ratio of minimum to maximum intensity in the interference pattern is x : 4 where x is ___.

Numerical answer: _____

Enter the requested integer (0 decimal places).

Correct answer: 1

Source solution

Given amplitude $\propto$ slit width Also intensity $\propto$ (Amplitude) ^{2} $\propto$ (Slit width) ^{2}

$$\frac{I_1}{I_2} = \left(\frac{3}{1}\right)^2 = 9 \Rightarrow I_1 = 9I_2$$

$$\frac{I_{\min}}{I_{\max}} = \left(\frac{\sqrt{I_1} - \sqrt{I_2}}{\sqrt{I_1} + \sqrt{I_2}}\right)^2 = \left(\frac{3-1}{3+1}\right)^2 = \frac{1}{4} = \frac{x}{4}$$

$$\Rightarrow x = 1.00$$

Question 268

In a Young's double slit experiment, the path different, at a certain point on the screen, between two interfering waves is $\frac{1}{8}$ th of wavelength. The ratio of the intensity at this point to that at the centre of a brigth fringe is close to :

A. 0.94

B. 0.74

C. 0.85

D. 0.80

Correct answer: C

Source solution

$$\Delta x = \frac{\lambda}{8}$$

$$\Delta\phi = \frac{2\pi}{\lambda}\Delta x = \frac{2\pi}{\lambda}\cdot\frac{\lambda}{8} = \frac{\pi}{4}$$

$$I = I_0\cos^2\left(\frac{\Delta\phi}{2}\right) = I_0\cos^2\left(\frac{\pi}{8}\right)$$

$$\frac{I}{I_0} = \cos^2\left(\frac{\pi}{8}\right)$$

Question 269

The width of one of the two slits in Young's double slit experiment is d while that of the other slit is xd . If the ratio of the maximum to the minimum intensity in the interference pattern on the screen is $\mathbf{9:4}$ then what is the value of $\boldsymbol{x}$?(Assume that the field strength varies according to the slit width.)

A. 2

B. 3

C. 5

D. 4

Correct answer: C

Source solution

$I \propto (\text{width})^2$

$$\left(\frac{\sqrt{I_1}+\sqrt{I_2}}{\sqrt{I_1}-\sqrt{I_2}}\right)^2=\frac{9}{4}$$

$$\frac{\sqrt{I_1}+\sqrt{I_2}}{\sqrt{I_1}-\sqrt{I_2}}=\frac{3}{2}$$

$$\frac{(x+1)d}{(x-1)d}=\frac{3}{2}$$

$\Rightarrow 3x-3=2x+2$

$$x=5$$

Question 270

In YDSE, separation between slits is 0.15 mm , distance between slits and screen is 1.5 m and wavelength of light is 589 nm . Then, fringe width is

A. 5.9 mm

B. 3.9 mm

C. $\mathbf{1.9\ mm}$

D. 2.3 mm

Correct answer: A

Source solution

Sol. Given, Maximum diameter of pipe $= \mathbf{6.4\,cm}$ Minimum diameter of pipe $= \mathbf{4.8\,cm}$

$$\begin{aligned}\beta = \lambda\frac{D}{d} &= \frac{589 \times 10^{-9}\,\mathrm{m} \cdot 1.5}{0.5 \times 10^{-3}\,\mathrm{m}} \\ &= 5.9\,\mathrm{mm}\end{aligned}$$

Question 271

In a Young's double slit experiment two slits are separated by 2 mm and the screen is placed one meter away. When a light of wavelength 500 nm is used, the fringe separation will be :

A. 0.75 mm

B. 0.50 mm

C. 1 mm

D. 0.25 mm

Correct answer: D

Source solution

Sol. Fringe width $(\beta) = \frac{\lambda D}{d}$

$$d = 2 \times 10^{-3}\,\mathrm{m}$$
$$\lambda = 500 \times 10^{-9}\,\mathrm{m}$$
$$D = 1\,\mathrm{m}$$

Now

$$\beta = \frac{500 \times 10^{-9} \cdot 1}{2 \times 10^{-3}}$$
$$\beta = \frac{5}{2} \times 10^{-4}$$
$$\beta = 2.5 \times 10^{-4}$$
$$\beta = 0.25\,\mathrm{mm}$$

Question 272

In the Young's double slit experiment, the distance between the slits varies in time as $\mathrm{d(t) = d_0 + a_0 \sin \omega t}$; where $\mathrm{d_0}, \omega$ and $\mathrm{a_0}$ are constants. The difference between the largest fringe width and the smallest fringe width obtained over time is given as :

A. $\frac{2\lambda \mathrm{D(d_0)}}{(\mathrm{d_0^2 - a_0^2})}$

B. $\frac{2\lambda \mathrm{Da_0}}{(\mathrm{d_0^2 - a_0^2})}$

C. $\frac{\lambda \mathrm{D}}{\mathrm{d_0^2}} \mathrm{a_0}$

D. $\frac{\lambda \mathrm{D}}{\mathrm{d_0 + a_0}}$

Correct answer: B

Source solution

Fringe Width, $\beta = \frac{\lambda \mathrm{D}}{\mathrm{d}}$

$$\beta_{\max} \Rightarrow d_{\min} \text{ and } \beta_{\min} \Rightarrow d_{\max}$$
$$d = d_0 + a_0 \sin \omega t$$
$$d_{\max} = d_0 + a_0 \text{ and } d_{\min} = d_0 - a_0$$
$$\therefore \beta_{\min} = \frac{\lambda D}{d_0 + a_0} \text{ and } \beta_{\max} = \frac{\lambda D}{d_0 - a_0}$$
$$\therefore \beta_{\max} - \beta_{\min} = \frac{\lambda D}{d_0 - a_0} - \frac{\lambda D}{d_0 + a_0} = \frac{2\lambda D a_0}{d_0^2 - a_0^2}$$

Question 273

In a Young's double slit experiment, the width ofthe one of the slit is three times the other slit. The amplitude of the light coming from a slit is proportional to the slit-width. Find the ratio of the maximum to the minimum intensity in the interference pattern.

A. 4:1

B. 2:1

C. 3:1

D. $1:4$

Correct answer: A

Source solution

$$\text{Given:} \qquad \omega_2 = 3\omega_1$$

Also,

$$A \propto \omega$$

$$\frac{\omega_1}{\omega_2} = \frac{1}{3} \tag{1}$$

Assume

$$\omega_1 = x, \qquad \omega_2 = 3x.$$

Since $A \propto \omega$,

$$\frac{A_1}{A_2} = \frac{\omega_1}{\omega_2} = \frac{1}{3} \tag{2}$$

From Eq.~(2),

$$A_1 = A, \qquad A_2 = 3A.$$

For interference,

$$I_{\max} = (A_1 + A_2)^2, \qquad I_{\min} = (A_1 - A_2)^2.$$

Therefore,

$$\frac{I_{\max}}{I_{\min}} = \frac{(A + 3A)^2}{(A - 3A)^2} = \frac{(4A)^2}{(-2A)^2} = \frac{16A^2}{4A^2} = \frac{4}{1}.$$

$$\boxed{\frac{I_{\max}}{I_{\min}} = 4}$$

Question 274

In Young's double slits experiment, the position of 5th bright fringe from the central maximum is 5 cm . The distance between slits and screen is 1 m and wavelength of used monochromatic light is 600 nm . The separation between the slits is:

A. $48\mu\ \text{m}$

B. $36\mu\ \text{m}$

C. $12\mu\ \text{m}$

D. $60\mu\ \text{m}$

Correct answer: D

Source solution

$$4 \times 5\beta = 5\,\text{cm}$$

$$20\beta = 5\,\text{cm}$$

$$\beta = \frac{5}{20}\,\text{cm} = 0.25\,\text{cm} = 2.5 \times 10^{-3}\,\text{m}$$

Using the fringe-width relation,

$$\beta = \frac{\lambda D}{d}$$

$$d = \frac{\lambda D}{\beta}$$

Substituting

$$\lambda = 600 \times 10^{-9}\,\text{m}, \qquad D = 1\,\text{m}, \qquad \beta = 2.5 \times 10^{-3}\,\text{m},$$

$$d = \frac{600 \times 10^{-9} \times 1}{2.5 \times 10^{-3}}$$

$$= 2.4 \times 10^{-4}\,\mathrm{m} = 240\,\mu\mathrm{m}.$$

$$\boxed{d = 240\,\mu\mathrm{m}}$$

Question 275

Given below are two statements : one is labelled as Assertion (A) and the other is labelled as Reason (R).Assertion (A) : If Young's double slit experiment is performed in an optically denser medium than air, then the consecutive fringes come closer.Reason (R) : The speed of light reduces in an optically denser medium than air while its frequency does not change.In the light of the above statements, choose the most appropriate answer from the options given below:

A. Both (A) and (R) are true and (R) is the correct explanation of (A)

B. (A) is false but (R) is true.

C. Both (A) and (R) are true but (R) is not the correct explanation of (A)

D. (A) is true but (R) is false.

Correct answer: A

Source solution

Assertion (A):

If Young's double-slit experiment is performed in an optically denser medium than air, the consecutive fringes come closer.

In YDSE,

$$\beta = \frac{\lambda D}{d}.$$

In a medium of refractive index μ,

$$\lambda_m = \frac{\lambda}{\mu}.$$

Therefore,

$$\beta_m = \frac{\lambda_m D}{d} = \frac{\lambda D}{\mu d} = \frac{\beta}{\mu}.$$

Since $\mu > 1$,

$$\beta_m < \beta.$$

Hence, the fringe width decreases and the consecutive fringes come closer.

Assertion (A) is true.

Reason (R):

In an optically denser medium,

$$v = \frac{c}{\mu},$$

so the speed of light decreases, while the frequency remains unchanged.

Since

$$\lambda = \frac{v}{f},$$

a decrease in v with constant f causes the wavelength to decrease.

As fringe width is proportional to wavelength,

$$\beta \propto \lambda,$$

the fringes come closer together.

Reason (R) is true and correctly explains Assertion (A).

Question 276

Given below are two statements. On is labelled as Assertion (A) and the other is labelled as Reason (R). Assertion (A) : In Young's double slit experiment, the fringes produced by red light are closer as compared to those produced by blue light.Reason (R) : The fringe width is directly proportional to the wavelength of light.In the light of above statements, choose the correct answer from the options given below :

A. Both (A) and (R) are true and (R) is the correct explanation of (A)

B. (A) is false but (R) is true.

C. Both (A) and (R) are true but (R) is NOT the correct explanation of (A).

D. (A) is true but (R) is false.

Correct answer: B

Source solution

Assertion (A):

In Young's double-slit experiment, the fringes produced by red light are closer as compared to those produced by blue light.

The fringe width is given by

$$\beta = \frac{\lambda D}{d}.$$

Since

$$\lambda_{\text{red}} > \lambda_{\text{blue}},$$

we have

$$\beta_{\text{red}} > \beta_{\text{blue}}.$$

Therefore, the fringes produced by red light are farther apart, not closer.

Assertion (A) is false.

Reason (R):

The fringe width is

$$\beta = \frac{\lambda D}{d}.$$

Hence,

$$\beta \propto \lambda.$$

Therefore, the fringe width is directly proportional to the wavelength of light.

Reason (R) is true.

Assertion (A) is false, but Reason (R) is true.

Dual Nature of Radiation and Matter

Questions 277-290 / 14 selected / 4.7% practice weight / Focus first

Question 277

A light beam of wavelength 500 nm is incident on a metal having work function of 1.25 eV, placed in a magnetic field of intensity B. The electrons emitted perpendicular to the magnetic field B, with maximum kinetic energy are bent into circular arc of radius 30 cm. The value of B is ___ $\times 10^{-7}\ \mathrm{T}$

Numerical answer: _____

Enter the requested integer (0 decimal places).

Correct answer: 125

Source solution

By photoelectric equation

$$\frac{hc}{\lambda} - \phi = k_{max}$$

$$k_{max} = \frac{1240}{500} - 1.25 \approx 1.25$$

$$r = \frac{\sqrt{2mk}}{eB}$$

$$B = \frac{\sqrt{2mk}}{er}$$

$$= 125 \times 10^{-7}\ \mathrm{T}$$

Question 278

A metal plate of area $1 \times 10^{-4}\ \mathrm{m}^2$ is illuminated by a radiation of intensity $16\ \mathrm{mW/m}^2$. The work function of the metal is 5 eV . The energy of the incident photons is 10 eV and only 10% of it produces photo electrons. The number of emitted photo electrons per second and their maximum energy, respectively, will be : $\left[1\mathrm{eV} = 1.6 \times 10^{-19}\ \mathrm{J}\right]$

A. 10^{10} and 5 eV

B. 10^{14} and 10 eV

C. 10^{12} and 5 eV

D. 10^{11} and 5 eV

Correct answer: D

Source solution

$$I = \frac{nE}{At}$$

$$16 \times 10^{-3} = \left(\frac{n}{t}\right)\frac{10 \times 1.6 \times 10^{-19}}{10^{-4}}$$

$$\left(\frac{n}{t}\right) = \frac{16 \times 10^{-3} \times 10^{-4}}{10 \times 1.6 \times 10^{-19}}$$

$$= \frac{16 \times 10^{-7}}{16 \times 10^{-18}}$$

$$= 10^{11}\ \mathrm{s}^{-1}$$

$$\boxed{\left(\frac{n}{t}\right) = 10^{11}\ \text{photons}\ \mathrm{s}^{-1}}$$

Question 279

If λ and K are de Broglie Wavelength and kinetic energy, respectively, of a particle with constant mass. The correct graphical representation for the particle will be :-

A.

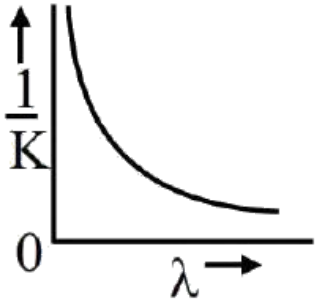

B.

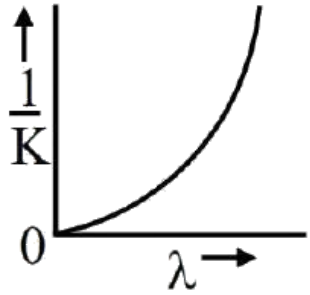

C.

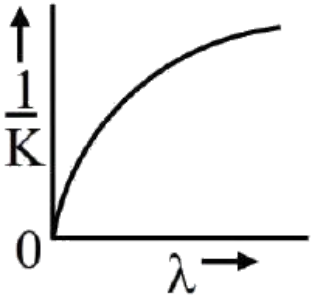

D.

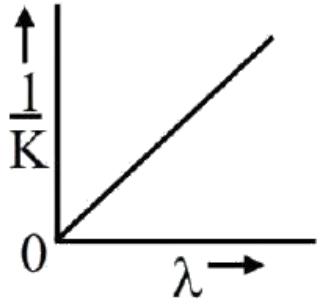

Correct answer: B

Source solution

$$\lambda = \frac{h}{mv} = \frac{h}{\sqrt{2mK}}$$

$$\lambda^2 = \frac{h^2}{2m} \cdot \frac{1}{K}$$

$$\text{Let } y = \lambda^2, \quad x = \frac{1}{K}$$

$$y = \frac{h^2}{2m} x$$

This is of the form $y = cx$

Hence, a straight line passing through the origin.

Question 280

Two photons of energy 4 eV and 4.5 eV are incident on two metals A and B respectively. The maximum kinetic energy for an ejected electron is T_A for A, and $T_B = T_A - 1.5\text{eV}$ for the metal B. The relation between the de-Broglie wavelengths of the ejected electron of A and B are $\lambda_B = 2\lambda_B$. The work function of the metal B is

A. 3 eV

B. 1.5 eV

C. 4.5 eV

D. 4 eV

Correct answer: D

Source solution

$$\lambda = \frac{h}{\sqrt{2m\,\mathrm{KE}}}$$

$$\therefore \quad \lambda \propto \frac{1}{\sqrt{\mathrm{KE}}}$$

$$\frac{\lambda_A}{\lambda_B} = \frac{\sqrt{\mathrm{KE}_B}}{\sqrt{\mathrm{KE}_A}}$$

Given,

$$\frac{\lambda_A}{\lambda_B} = \frac{1}{2}$$

and

$$\mathrm{KE}_B = \mathrm{KE}_A - 1.5$$

Therefore,

$$\frac{1}{2} = \sqrt{\frac{\mathrm{KE}_A - 1.5}{\mathrm{KE}_A}}$$

Squaring both sides,

$$\frac{1}{4} = \frac{\mathrm{KE}_A - 1.5}{\mathrm{KE}_A}$$

$$\mathrm{KE}_A - 1.5 = \frac{\mathrm{KE}_A}{4}$$

$$\frac{3}{4}\,\mathrm{KE}_A = 1.5$$

$$\mathrm{KE}_A = 2\,\mathrm{eV}$$

Hence,

$$\mathrm{KE}_B = 2 - 1.5 = 0.5\,\mathrm{eV}$$

Using Einstein's photoelectric equation,

$$h\nu = \phi_B + \mathrm{KE}_B$$

$$4.5 = \phi_B + 0.5$$

$$\phi_B = 4\,\mathrm{eV}$$

Question 281

Two stream of photons, possessing energies equal to twice and ten times the work function of metal are incident on the metal surface successively. The value of ratio of maximum velocities of the photoelectrons emitted in the two respective cases is $x : y$. The value of x is .

Numerical answer: _____

Enter the requested value (an integer; 0 decimal places). Use the units and scaling stated in the question.

Correct answer: 1

Source solution

Forphotoelectric effectk. $E_{max} = E - \phi$

$\mathbf{E_1 = 2\phi, \quad k_1 = \phi}$

$\mathbf{E_2 = 10\phi, \quad k_2 = 9\phi}$

$\therefore V \propto \sqrt{k} \quad \left(k = \frac{1}{2}mv^2\right)$

$\frac{v_1}{v_2} = \sqrt{\frac{1}{9}} \Rightarrow \frac{1}{3} = \frac{x}{y}$

$\mathbf{x = 1}$

Question 282

When light of frequency twice the threshold frequency is incident on the metal plate, the maximum velocity of emitted election is $\mathbf{v_1}$. When the frequency of incident radiation is increased to five times the threshold value, the maximum velocity of emitted electron becomes $\mathbf{v_2}$. If $\mathbf{v_2 = x\, v_1}$, the value of x will be .

Numerical answer: _____

Enter the requested value (an integer; 0 decimal places). Use the units and scaling stated in the question.

Correct answer: 2

Source solution

$hv = hv_{th} + \frac{1}{2}mv^2$

$$\mathrm{v = 2v_{th}} \tag{1}$$

$2hv_{th} = hv_{th} + \frac{1}{2}mv_1^2 \ldots..$
$\mathrm{v = 5v_{th}}$

$$\mathrm{5hv_{th} = hv_{th} + \frac{1}{2}mv_2^2} \tag{2}$$

$\frac{\frac{1}{2}\mathrm{mv_1^2}}{\frac{1}{2}\mathrm{mv_2^2}} = \frac{\mathrm{hv_{th}}}{\mathrm{4hv_{th}}}$
$\left(\frac{\mathrm{v_1}}{\mathrm{v_2}}\right)^2 = \frac{1}{4} \Rightarrow \mathrm{v_2 = 2v_1}$

Question 283

A parallel beam of light of wavelength 900 nm and intensity $100\mathrm{Wm}^{-2}$ is incident on a surface perpendicular to the beam. Tire number of photons crossing $1\ \mathrm{cm}^2$ area perpendicular to the beam in one second is :

A. 3×10^{16}

B. 4.5×10^{16}

C. 4.5×10^{17}

D. 4.5×10^{20}

Correct answer: B

Source solution

$$\lambda = 900 \times 10^{-9}\,\mathrm{m}, \quad I = 100\,\mathrm{W\,m^{-2}}$$

$$\text{Energy incident per second on area } A: \quad E = IA$$

$$\text{Energy of one photon: } E_p = \frac{hc}{\lambda}$$

$$\text{Number of photons per second: } \quad n = \frac{IA}{E_p} = \frac{IA\lambda}{hc}$$

$$n = \frac{(100)\,(1 \times 10^{-4})\,(900 \times 10^{-9})}{(6.62 \times 10^{-34})(3 \times 10^{8})}$$

$$n = 4.5 \times 10^{16}$$

$$\boxed{n = 4.5 \times 10^{16} \text{ photons s}^{-1}}$$

Question 284

An atom absorbs a photon of wavelength 500 nm and emits another photon of wavelength 600 nm . The net energy absorbed by the atom in this process is $\mathbf{n \times 10^{-4} eV}$. The value of n is .
[Assume the atom to be stationary during the absorption and emission process]
(Take $\mathbf{h = 6.6 \times 10^{-34} Js}$ and $\mathbf{c = 3 \times 10^{8}\ m/s}$).

Numerical answer: _____

Enter the requested value or coefficient rounded to the nearest integer (0 decimal places).

Correct answer: 4125

Source solution

$$\mathbf{E = E_1 - E_2 = \frac{hc}{\lambda_1} - \frac{hc}{\lambda_2} = hc\left(\frac{1}{\lambda_1} - \frac{1}{\lambda_2}\right)}$$
$$= 6.6 \times 10^{-34} \times 3 \times 10^{8}\left(\frac{1}{500 \times 10^{-9}} - \frac{1}{600 \times 10^{-9}}\right)$$
$$= 6.6 \times 10^{-20}\ \text{J}$$
$$= \frac{6.6 \times 10^{-20}}{1.6 \times 10^{-19}} \text{eV} = 4.125 \times 10^{-1} \text{eV}$$
$$= 4125 \times 10^{-4} \text{eV}$$

Question 285

The de Broglie wavelength of an electron having kinetic energy E is λ. If the kinetic energy of electron becomes $\frac{E}{4}$, then its de-Broglie wavelength will be :

A. $\frac{\lambda}{\sqrt{2}}$

B. $\frac{\lambda}{2}$

C. 2λ

D. $\sqrt{2}\lambda$

Correct answer: C

Source solution

$$\lambda = \frac{h}{\sqrt{2mE}}$$

If the kinetic energy becomes

$$E' = \frac{E}{4},$$

then

$$\lambda' = \frac{h}{\sqrt{2m\left(\frac{E}{4}\right)}}$$

$$= \frac{2h}{\sqrt{2mE}}$$

$$\boxed{\lambda' = 2\lambda}$$

Question 286

The kinetic energy of an electron, α-particle and a proton are given as $\mathbf{4\ K, 2\ K}$ and K respectively. The de-Broglie wavelength associated with electron (λ e) α-particle ($\lambda\alpha$) and the proton (λ p) are as follows :

A. $\lambda\alpha = \lambda\mathrm{p} < \lambda\mathrm{e}$

B. $\lambda\alpha > \lambda p > \lambda e$

C. $\lambda\alpha < \lambda\mathrm{p} < \lambda\mathrm{e}$

D. $\lambda\alpha = \lambda p > \lambda e$

Correct answer: C

Source solution

Sol.

Masses:

$$\textbf{Electron: } m_e, \qquad \textbf{Proton: } m_p, \qquad \textbf{Alpha particle: } m_\alpha = 4m_p$$

Charges:

$$\textbf{Electron: } e, \qquad \textbf{Proton: } e, \qquad \textbf{Alpha particle: } 2e$$

Kinetic energies:

$$\textbf{Electron: } 4K, \qquad \textbf{Proton: } K, \qquad \textbf{Alpha particle: } 2K$$

Using de Broglie relation,

$$\lambda = \frac{h}{\sqrt{2mK}}$$

Thus,

$$\lambda_e = \frac{h}{\sqrt{2m_e(4K)}}, \quad \lambda_p = \frac{h}{\sqrt{2m_p(K)}}, \quad \lambda_\alpha = \frac{h}{\sqrt{2m_\alpha(2K)}}$$

Hence,

$$\lambda_\alpha < \lambda_p < \lambda_e$$

Question 287

When UV light of wavelength 300 nm is incident on the metal surface having work function 2.13 eV , electron emission takes place. The stopping potential is : (Given hc $= 1240\text{eVnm}$)

A. 4 V

B. 4.1 V

C. 2 V

D. 1.5 V

Correct answer: C

Source solution

$$\frac{hc}{\lambda} - \phi = e \cdot V_s$$

$$\Rightarrow \frac{1240\,\text{eV}}{300} - 2.13\,\text{eV} = e \cdot V_s$$

$$\Rightarrow 4.13\,\text{eV} - 2.13\,\text{eV} = e \cdot V_s$$

$$\Rightarrow \quad V_s = 2\,\text{V}$$

Question 288

In photoelectric effect an em-wave is incident on a metal surface and electrons are ejected from the surface. If the work function of the metal is 2.14 eV and stopping potential is 2 V , what is the wavelength of the em-wave?(Given hc $= 1242 \mathrm{eVnm}$ where h is the Planck's constant and c is the speed of light in vaccum.)

A. 400 nm

B. 600 nm

C. 200 nm

D. 300 nm

Correct answer: D

Source solution

$$\mathrm{eV_s = E - \phi}$$

$$\mathrm{2\,eV = E - 2.14\,eV}$$

$$\mathrm{E = 4.14\,eV}$$

$$\mathrm{E = \frac{hc}{\lambda}}$$

$$\mathrm{\lambda = \frac{1242}{4.14} = 300\,nm}$$

Question 289

UV light of 4.13 eV is incident on a photosensitive metal surface having work function 3.13 eV . The maximum kinetic energy of ejected photoelectrons will be :

A. 4.13 eV

B. 1 eV

C. 3.13 eV

D. 7.26 eV

Correct answer: B

Source solution

$$\mathrm{E_{photon}} = \text{work function} + \mathrm{K \cdot E_{max}}$$

$$\therefore 4.13 = 3.13 + \mathrm{K \cdot E_{max}}$$

$$\therefore \mathrm{K \cdot E_{max}} = 1\,\mathrm{eV}$$

Question 290

The stopping potential for electrons emitted from a photosensitive surface illuminated by light of wavelength 491 nm is 0.710 V . When the incident wavelength is changed to a new value, the stopping potential is 1.43 V . The new wavelength is:

A. 400 NM

B. 382 nm

C. 309 nm

D. 329 nm

Correct answer: B

Source solution

Sol. From the photoelectric effect equation

$$\frac{\mathrm{hc}}{\lambda}=\phi+\mathrm{ev_s} \tag{i}$$

so

$$\mathrm{ev_{s_1}}=\frac{\mathrm{hc}}{\lambda_1}-\phi$$

$$\mathrm{ev_{s_2}}=\frac{\mathrm{hc}}{\lambda_2}-\phi \tag{ii}$$

Subtract equation (i) from equation (ii)

$$\mathrm{ev_{s_1}}-\mathrm{ev_{s_2}}=\frac{\mathrm{hc}}{\lambda_1}-\frac{\mathrm{hc}}{\lambda_2}$$

$$v_{s_1}-v_{s_2}=\frac{\mathrm{hc}}{\mathrm{e}}\left(\frac{1}{\lambda_1}-\frac{1}{\lambda_2}\right)$$

$$(0.710-1.43)=1240\left(\frac{1}{491}-\frac{1}{\lambda_2}\right)$$

$$\frac{-0.72}{1240}=\frac{1}{491}-\frac{1}{\lambda_2}$$

$$\frac{1}{\lambda_2} = \frac{1}{491} + \frac{0.72}{1240}$$

$$\frac{1}{\lambda_2} = 0.00203 + 0.00058$$

$$\frac{1}{\lambda_2} = 0.00261$$

$$\lambda_2 = 383.14$$

$$\lambda_2 \simeq 382\,\mathrm{nm}$$

Atoms

Questions 291-291 / 1 selected / 0.3% practice weight / Consolidate

Question 291

Find the ratio of energies of photons produced due to transition of an election of hydrogen atom from its(i) second permitted energy level to the first level, and (ii) the highest permitted energy level to the first permitted level.

A. $3:4$

B. $4:3$

C. $1:4$

D. $4:1$

Correct answer: A

Source solution

$$E_n = -\frac{13.6}{n^2}\,\text{eV}$$

For the ground state,

$$E_1 = -13.6\,\text{eV}$$

For the first excited state,

$$E_2 = -\frac{13.6}{4} = -3.4\,\text{eV}$$

For ionization,

$$E_\infty = 0$$

Therefore,

$$\frac{E_2 - E_1}{E_\infty - E_1} = \frac{-3.4 - (-13.6)}{0 - (-13.6)}$$

$$= \frac{10.2}{13.6}$$

$$= \frac{13.6\left(1 - \frac{1}{4}\right)}{13.6}$$

$$= \frac{3}{4}$$

$$\boxed{\frac{E_2 - E_1}{E_\infty - E_1} = \frac{3}{4}}$$

Nuclei

Questions 292-293 / 2 selected / 0.7% practice weight / Consolidate

Question 292

Consider the following radioactive decay processThe mass number and the atomic number of $\mathbf{A_6}$ are given by:

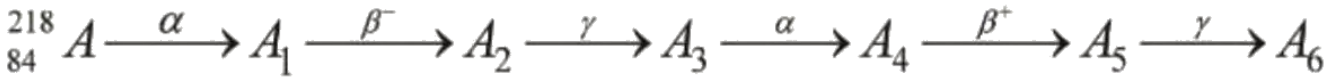

A. 210 and 84

B. 210 and 82

C. 211 and 80

D. 210 and 80

Correct answer: D

Source solution

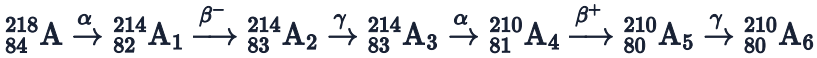

Question 293

The energy released in the fusion of 2 kg of hydrogen deep in the sun is $\mathbf{E_H}$ and the energy released in the fission of 2 kg of $^{235}\mathbf{U}$ is $\mathbf{E_U}$. The ratio $\frac{\mathbf{E_H}}{\mathbf{E_U}}$ is approximately :(Consider the fusion reaction as $4_1^1\mathbf{H} + 2\mathbf{e}^- \rightarrow {}_2^4\mathbf{He} + 2\mathbf{v} + 6\gamma + \mathbf{26.7MeV}$, energy released in the fission reaction of $^{235}\mathbf{U}$ is 200 MeV per fission nucleus and $\mathbf{N_A} = \mathbf{6.023} \times \mathbf{10^{23}}$)

A. 9.13

B. 15.04

C. 7.62

D. 25.6

Correct answer: C

Source solution

$$4\,{}_1^1\mathrm{H} \rightarrow {}_2^4\mathrm{He} + 26.7\,\mathrm{MeV}$$

$$\text{Energy released per hydrogen nucleus} = \frac{26.7}{4}\,\mathrm{MeV}$$

$$E_H = \frac{2000}{1} N_A \left(\frac{26.7}{4}\right)\mathrm{MeV}$$

$$E_U = \frac{2000}{235} N_A(200)\mathrm{MeV}$$

$$\frac{E_H}{E_U} = \frac{\frac{2000}{1} N_A \left(\frac{26.7}{4}\right)}{\frac{2000}{235} N_A(200)}$$

$$= 235 \times \frac{26.7}{4 \times 200}$$

$$= 7.84$$

$$\boxed{\frac{E_H}{E_U} \approx 7.84}$$

(approximately 7.6 to 7.8)

Semiconductor Electronics: Materials, Devices and Simple Circuits

Questions 294-297 / 4 selected / 1.3% practice weight / Consolidate

Question 294

Which of the following circuits has the same output as that of the given circuit?

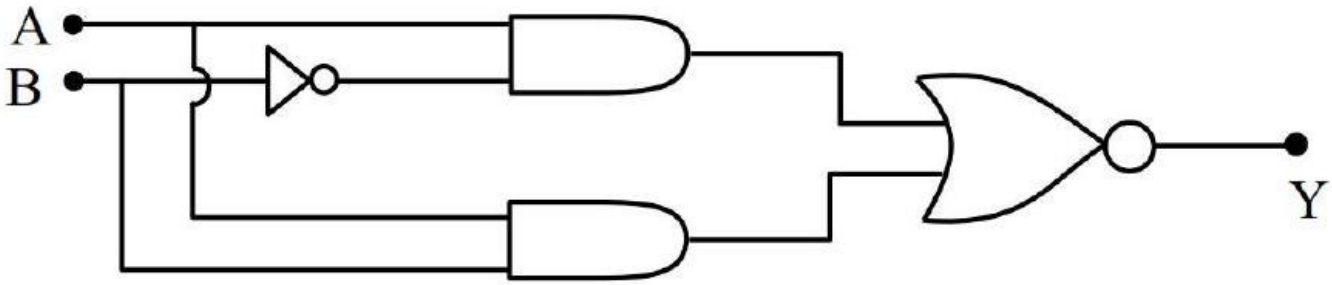

A.

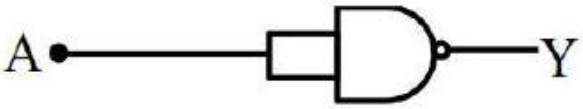

B.

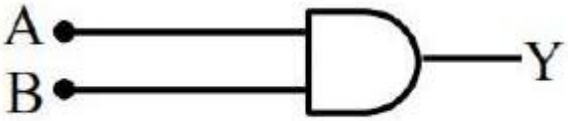

C.

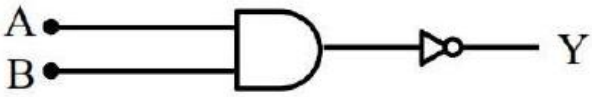

D.

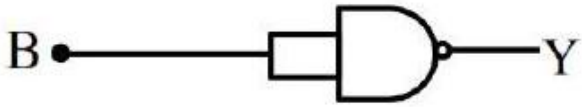

(3)

Correct answer: A

Source solution

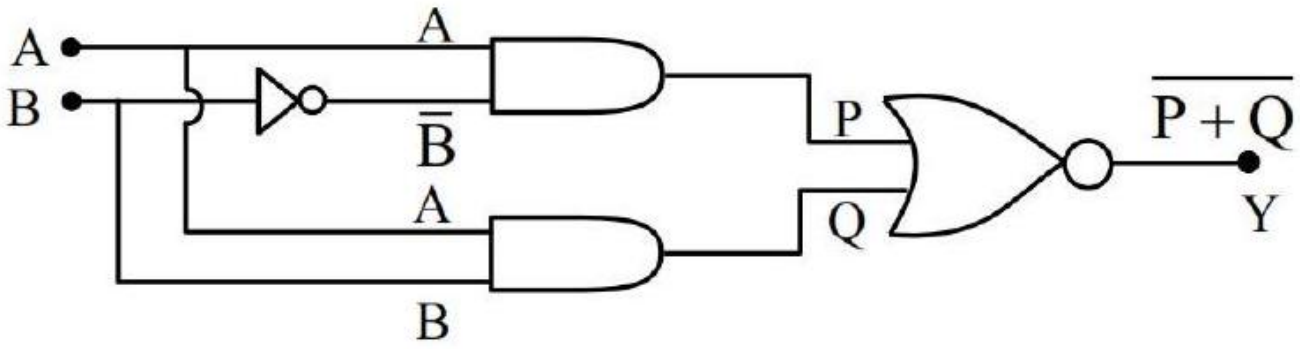

$P = A \cdot \overline{B}$

$Q = A \cdot B$

$Y = \overline{P+Q} = \overline{A \cdot \overline{B} + A \cdot B}$

$= \overline{A \cdot (B + \overline{B})} = \overline{A \cdot 1}$

$Y = \overline{A}$

Question 295

The radii of two planets ' A ' and ' B ' are ' R ' and ' 4 R ' and their densities are ρ and $\rho/3$ respectively. The ratio of acceleration due to gravity at their surfaces $(g_A : g_B)$ will be :

A. $1 : 16$

B. $3 : 16$

C. $3 : 4$

D. $4 : 3$

Correct answer: C

Source solution

$$g = \frac{GM}{R^2}$$

Since

$$M = \rho\left(\frac{4}{3}\pi R^3\right),$$

we get

$$g = \frac{G}{R^2}\left(\rho\frac{4}{3}\pi R^3\right)$$

$$= \left(\frac{4\pi G}{3}\right)\rho R$$

Thus,

$$g \propto \rho R$$

Therefore,

$$\frac{g_A}{g_B} = \frac{\rho_A R_A}{\rho_B R_B}$$

Given

$$R_A = R, \qquad \rho_A = \rho,$$

and

$$R_B = 4R, \qquad \rho_B = \frac{\rho}{3},$$

$$\frac{g_A}{g_B} = \frac{R \cdot \rho}{4R \cdot \left(\frac{\rho}{3}\right)}$$

$$= \frac{3}{4}$$

$$\boxed{\frac{g_A}{g_B} = \frac{3}{4}}$$

Question 296

A	B	Y
0	0	1
0	1	0
1	0	0
1	1	1

To obtain the given truth table, the following logic gate should be placed at G:

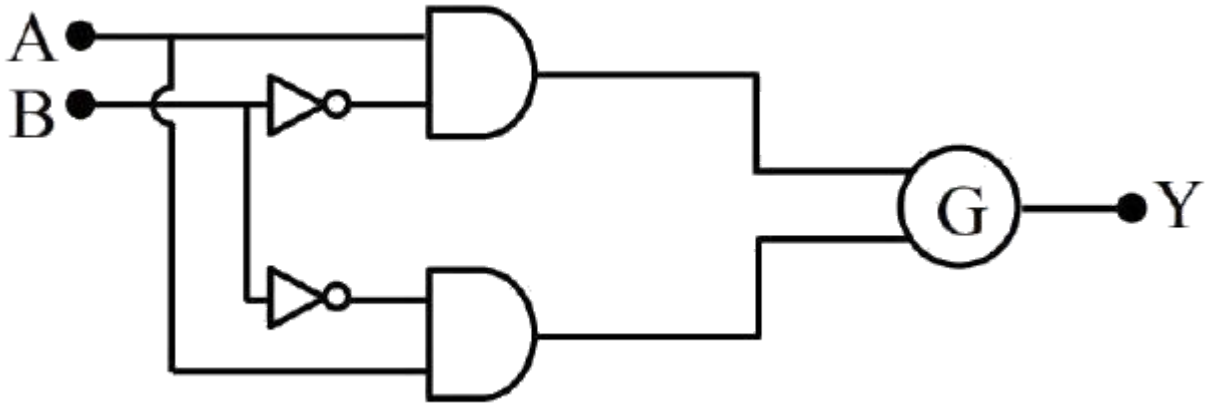

A. NOR Gate

B. AND Gate

C. NAND Gate

D. OR Gate

Correct answer: A

Source solution

For NOR gate

$$Y = \overline{A + B}$$

$$= \overline{A} \cdot \overline{B}$$

Truth table

A	B	Y
0	0	1
0	1	0
1	0	0
1	1	0

$\therefore$ **NOR Gate**

Question 297

In the following logic circuit the sequence of the inputs A, B are $(0,0),(0,1),(1,0)$ and $(1,1)$. The output Y for this sequence will be :

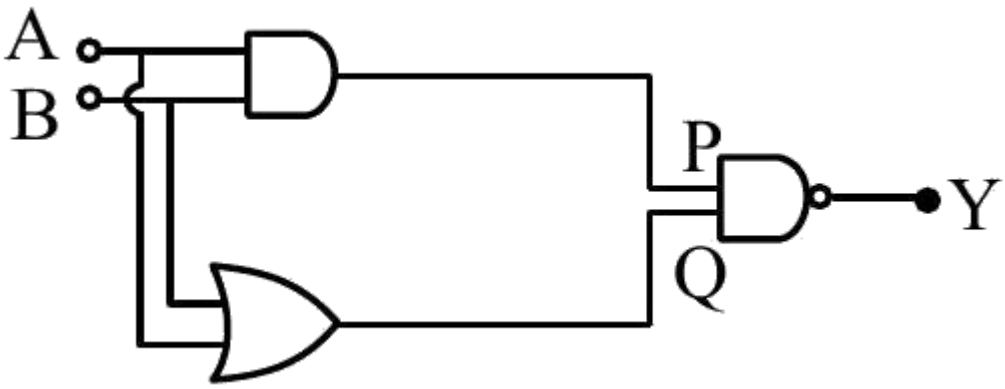

A. $1,0,1,0$

B. $0,1,0,1$

C. $1,1,1,0$

D. $0,0,1,1$

Correct answer: C

Source solution

$$\mathrm{Y}=\overline{(\mathrm{A}\cdot\mathrm{B})\cdot(\mathrm{A}+\mathrm{B})}$$

$\mathrm{Y}_{(0,0)}=1, \mathrm{Y}_{(0,1)}=1, \mathrm{Y}_{(1,0)}=1, \mathrm{Y}_{(1,1)}=0$

Communication Systems

Questions 298-300 / 3 selected / 1.0% practice weight / Historical appendix

Question 298

A carrier wave with amplitude of 250 V is amplitude modulated by a sinusoidal base band signal of amplitude 150 V. The ratio of minimum amplitude to maximum amplitude for the amplitude modulated wave is 50 : x, then value of x is ___

Numerical answer: _____

Enter the requested integer (0 decimal places).

Correct answer: 200

Source solution

$$A_{\max} = A_C + A_m = 250 + 150 = 400$$
$$A_{\min} = A_C - A_m = 250 - 150 = 100$$
$$\frac{A_{\min}}{A_{\max}} = \frac{100}{400} = \frac{1}{4} = \frac{5}{200}$$
$$x = 200$$

Question 299

The maximum and minimum amplitude of an amplitude modulated wave is 16 V and 8 V respectively. The modulation index for this amplitude modulated wave is $x \times 10^{-2}$. The value of x is .

Numerical answer: _____

Enter the requested value (an integer; 0 decimal places). Use the units and scaling stated in the question.

Correct answer: 33

Source solution

33

$A_m = \frac{A_{\max} - A_{\min}}{2}$

$A_C = \frac{A_{\max} + A_{\min}}{2}$ $\begin{bmatrix} A_{\max} = 16\ \text{V} \\ A_{\min} = 8\ \text{V} \end{bmatrix}$

Modulation index (mi) $= \frac{A_m}{A_c} = \frac{\frac{A_{\max} - A_{\min}}{2}}{\frac{A_{\max} + A_{\min}}{2}} = \frac{A_{\max} - A_{\min}}{A_{\max} + A_{\min}}$

$\text{mi} = \frac{16-8}{16+8} = \frac{8}{24} = \frac{1}{3} = 0.33$

$\text{mi} = 33 \times 10^{-2}$

$\text{x} = 33$

Question 300

The maximum and minimum voltage of an amplitude modulated signal are 60 V and 20 V respectively. The percentage modulation index will be :

A. 0.5%

B. 50%

C. 2%

D. 30%

Correct answer: B

Source solution

$$V_{\max} = 60$$

$$V_{\min} = 20$$

Percentage modulation is given by

$$m(\%) = \left(\frac{V_{\max} - V_{\min}}{V_{\max} + V_{\min}}\right) \times 100$$

$$= \left(\frac{60 - 20}{60 + 20}\right) \times 100$$

$$= \left(\frac{40}{80}\right) \times 100$$

$$= \frac{1}{2} \times 100$$

$$= 50\%$$

$$\boxed{\text{Percentage modulation} = 50\%}$$