LEARNE2I / PRIORITY PRACTICE

JEE Main 2026 Session 1

Physics
Solutions companion

300 questions / NCERT chapter navigation
Answers and available source solutions, in paper order.

Use the question numbers from the companion question paper. Brief source answers are identified wherever a detailed solution is unavailable.

Solutions on your phone

Scan to choose a chapter or question. You can also download all three solutions PDFs together.

learne2i.com/jee-main/revision-archive/2026-session-1/

Open the PDF bookmarks panel on the left to jump between chapters. The chapter links in the guide are clickable too.

YOUR PRACTICE ROADMAP

Chapter & topic priorities

For this Session 2 collection, begin with **Current Electricity; Ray Optics and Optical Instruments; Electromagnetic Induction**. These chapters have the largest share of the selected questions.

Practice weight = questions selected from a chapter / 300. Topic percentages use that chapter's question count. These are practice priorities from the prediction output, not guaranteed exam marks or probabilities.

NCERT chapter / leading topics	Priority	Questions	Weight
Units and Measurements Screw gauge: 5 (41.7%) / Dimensional analysis: 2 (16.7%) / Units and Measurements: 2 (16.7%) / More topics in chapter guide	Focus first	1-12 (12)	4.0%
Motion in a Straight Line Kinematics: 8 (61.5%) / Equations of motion: 4 (30.8%) / Uniformly accelerated motion: 1 (7.7%)	Focus first	13-25 (13)	4.3%
Motion in a Plane Equations of motion: 2 (40.0%) / Projectile motion: 2 (40.0%) / Kinematics: 1 (20.0%)	Consolidate	26-30 (5)	1.7%
Laws of Motion Newtonian mechanics: 8 (53.3%) / Newton's second law: 4 (26.7%) / Friction: 3 (20.0%)	Focus first	31-45 (15)	5.0%
Work, Energy and Power Work and energy: 8 (53.3%) / Work-energy theorem: 4 (26.7%) / Power: 1 (6.7%) / More topics in chapter guide	Focus first	46-60 (15)	5.0%
System of Particles and Rotational Motion Rotational dynamics: 8 (50.0%) / Momentum and rotation: 6 (37.5%) / Moment of inertia: 2 (12.5%)	Focus first	61-76 (16)	5.3%
Gravitation Satellite motion: 3 (75.0%) / Escape velocity: 1 (25.0%)	Consolidate	77-80 (4)	1.3%
Mechanical Properties of Solids Elasticity: 4 (66.7%) / Young's modulus: 2 (33.3%)	Next	81-86 (6)	2.0%
Mechanical Properties of Fluids Surface tension: 3 (50.0%) / Viscosity: 3 (50.0%)	Consolidate	87-92 (6)	2.0%
Thermal Properties of Matter Heat transfer: 3 (60.0%) / Calorimetry: 2 (40.0%)	Consolidate	93-97 (5)	1.7%
Thermodynamics First law of thermodynamics: 5 (62.5%) / Thermodynamic processes: 2 (25.0%) / Thermodynamics: 1 (12.5%)	Next	98-105 (8)	2.7%

NCERT chapter / leading topics	Priority	Questions	Weight
Kinetic Theory Kinetic molecular theory: 8 (66.7%) / Root-mean-square speed: 2 (16.7%) / Kinetic interpretation of pressure: 1 (8.3%) / More topics in chapter guide	Focus first	106-117 (12)	4.0%
Oscillations Simple harmonic motion: 3 (33.3%) / Spring-mass oscillation: 3 (33.3%) / Oscillatory motion: 2 (22.2%) / More topics in chapter guide	Next	118-126 (9)	3.0%
Waves Wave motion: 10 (100.0%)	Next	127-136 (10)	3.3%
Electric Charges and Fields Electric fields and forces: 6 (54.5%) / Electric field: 2 (18.2%) / Electric Charges and Fields: 1 (9.1%) / More topics in chapter guide	Focus first	137-147 (11)	3.7%
Electrostatic Potential and Capacitance Electric potential and capacitors: 8 (57.1%) / Capacitors with dielectrics: 2 (14.3%) / Parallel-plate capacitance: 2 (14.3%) / More topics in chapter guide	Focus first	148-161 (14)	4.7%
Current Electricity Electric circuits: 16 (51.6%) / Ohm's law: 8 (25.8%) / Circuit analysis: 2 (6.5%) / More topics in chapter guide	Focus first	162-192 (31)	10.3%
Moving Charges and Magnetism Magnetic force and field: 8 (53.3%) / Magnetic field due to currents: 3 (20.0%) / Biot-Savart law: 2 (13.3%) / More topics in chapter guide	Focus first	193-207 (15)	5.0%
Electromagnetic Induction Inductance and induced emf: 9 (52.9%) / Faraday's law: 5 (29.4%) / Electromagnetic Induction: 1 (5.9%) / More topics in chapter guide	Focus first	208-224 (17)	5.7%
Alternating Current Series LCR resonance: 5 (55.6%) / AC circuits: 3 (33.3%) / Transformer: 1 (11.1%)	Next	225-233 (9)	3.0%
Electromagnetic Waves Electromagnetic spectrum: 4 (50.0%) / Electromagnetic waves: 2 (25.0%) / Properties of electromagnetic waves: 2 (25.0%)	Next	234-241 (8)	2.7%
Ray Optics and Optical Instruments Lens formula: 20 (66.7%) / Geometrical optics: 3 (10.0%) / Mirror formula: 3 (10.0%) / More topics in chapter guide	Focus first	242-271 (30)	10.0%
Wave Optics Young's double-slit interference: 7 (77.8%) / Wave Optics: 1 (11.1%) / Young double-slit interference: 1 (11.1%)	Next	272-280 (9)	3.0%
Dual Nature of Radiation and Matter de Broglie wavelength: 7 (58.3%) / Photoelectric equation: 2 (16.7%) / Dual Nature of Radiation and Matter: 1 (8.3%) / More topics in chapter guide	Focus first	281-292 (12)	4.0%
Atoms Hydrogen spectrum: 1 (100.0%)	Consolidate	293-293 (1)	0.3%

NCERT chapter / leading topics	Priority	Questions	Weight
Semiconductor Electronics: Materials, Devices and Simple Circuits Energy bands in solids: 1 (33.3%) / Logic gates: 1 (33.3%) / Zener regulation: 1 (33.3%)	Consolidate	294-296 (3)	1.0%
Communication Systems Historical appendix / omitted source chapter Communication systems: 2 (50.0%) / Amplitude modulation: 1 (25.0%) / Omitted Chapter Communication System: 1 (25.0%)	Historical appendix	297-300 (4)	1.3%

How to use the priorities

1. Rank chapters by their selected question counts. Ties follow NCERT book order.
2. Focus first: chapters starting within the first 70% of selected, non-historical questions. Next: the following 20%. Consolidate: the remainder. A chapter crossing a threshold stays together.
3. Topic counts use the question's existing core concept, falling back to topic and then chapter. Each question is counted once. Full topic lists begin each chapter.
4. Historical/omitted chapters stay in a separate appendix. Their presence is not a recommendation that they are in the target examination syllabus.

Names follow NCERT Classes XI and XII. Practical chemistry is identified as a laboratory-manual section. Percentages are rounded and may not add to exactly 100.0%. Chapters with no selected questions are not listed; this does not mean they have no exam importance.

Chapter naming references: NCERT textbooks.

Units and Measurements

Questions 1-12 / 12 selected / 4.0% practice weight / Focus first

Question 1

$\left(\mathrm{P}+\frac{\mathrm{a}}{\mathrm{V}^2}\right)(\mathrm{V}-\mathrm{b})=\mathrm{RT}$ represents the equation of state of some gases. Where P is the pressure, V is the volume, T is the temperature and a, b, R are the constants. The physical quantity, which has dimensional formula as that of $\frac{b^2}{a}$, will be:

A. Compressibility

B. Energy density

C. Modulus of rigidity

D. Bulk modulus

Correct answer: A

Source solution

For the van der Waals equation,

$$\left(P+\frac{a}{V^2}\right)(V-b)=RT,$$

the quantities added or subtracted must have the same dimensions.

Hence,

$$[b]=[V]=L^3.$$

Also,

$$\left[\frac{a}{V^2}\right]=[P].$$

Therefore,

$$[a] = [P][V]^2.$$

Substituting

$$[P] = ML^{-1}T^{-2}, \qquad [V] = L^3,$$

$$[a] = \left(ML^{-1}T^{-2}\right)\left(L^3\right)^2.$$

$$= ML^5T^{-2}.$$

Now,

$$\frac{[b]^2}{[a]} = \frac{(L^3)^2}{ML^5T^{-2}}.$$

$$= \frac{L^6}{ML^5T^{-2}} = M^{-1}LT^2.$$

$$\boxed{\frac{[b]^2}{[a]} = M^{-1}LT^2}$$

Question 2

Student A and Student B used two screw gauges of equal pitch and 100 equal circular divisions to measure the radius of a given wire. The actual value of the radius of the wire is 0.322 cm. The absolute value of the difference between the final circular scale readings observed by the students A and B is ___. [Figure shows position of reference 'O' when jaws of screw gauge are closed] Given pitch $= 0.1\ \text{cm}$.

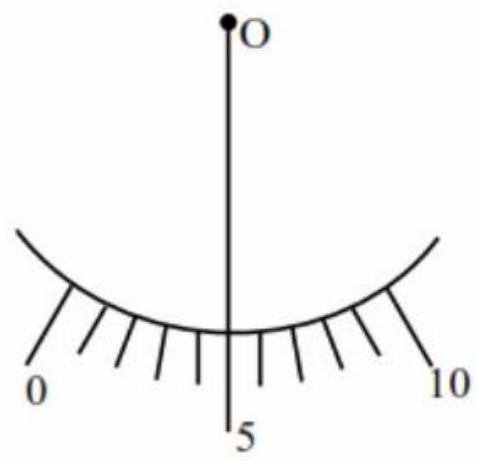

Screw gauge (A)

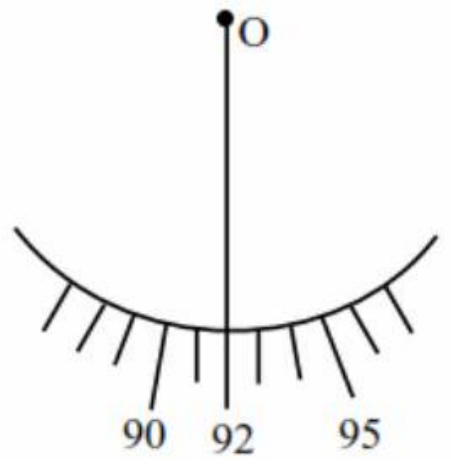

Screw gauge (B)

Numerical answer: _____

Enter the requested integer (0 decimal places).

Correct answer: 13

Source solution

For (A) Reading = MSR + CSR + Error

$$0.322 = 0.300 + \text{CSR} + 5 \times \text{LC}$$
$$0.322 = 0.300 + \text{CSR} + 0.005$$

$$\text{CSR} = 0.017$$

For B Reading = MSR + CSR + Error

$$0.322 = 0.200 + \text{CSR} + 0.092$$
$$\text{CSR} = 0.030$$

Difference $= 0.030 - 0.017 = 0.013$ cm Division on circular scale $= \frac{0.013}{0.001} = 13$

Question 3

There are 100 divisions on the circular scale of a screw gauge of pitch 1 mm . With no measuring quantity in between the jaws, the zero of the circular scale lies 5 divisions below the reference line. The diameter of a wire is then measured using this screw gauge. It is found the 4 linear scale divisions are clearly visible while 60 divisions on circular scale coincide with the reference line. The diameter of the wire is :

A. 4.65 mm

B. 4.55 mm

C. 4.60 mm

D. 3.35 mm

Correct answer: B

Source solution

$$\text{Least count} = \frac{1}{100}\ \text{mm} = 0.01\ \text{mm}.$$

Given,

$$\text{Zero error} = +0.05\ \text{mm}.$$

The corrected reading is

$$\text{Reading} = \text{MSR} + \text{CSR} - \text{Zero error}.$$

$$= 4.00 + (60 \times 0.01) - 0.05.$$

$$= 4.00 + 0.60 - 0.05.$$

$$= 4.55\ \text{mm}.$$

$\boxed{4.55\ \text{mm}}$

Question 4

Assertion A : If in five complete rotations of the circular scale, the distance travelled on main scale of the screw gauge is 5 mm and there are 50 total divisions on circular scale, then least count is 0.001 cm. Reason R : Least Count $= \frac{\text{Pitch}}{\text{Total divisions on circular scale}}$ In the light of the above statements, choose the most appropriate answer from the options given below :

A. $\mathbf{A}$ is not correct but $\mathbf{R}$ is correct.

B. Both A and R are correct and R is the correct explanation of A.

C. A is correct but R is not correct.

D. Both A and R are correct and R is NOT the correct explanation of A.

Correct answer: A

Source solution

Least count $= \frac{\text{Pitch}}{\text{Total divisions on circular scale}}$ In 5 revolution, distance travel, 5 mm In 1 revolution, it will travel 1 mm . So least count $= \frac{1}{50} = 0.02$

Question 5

Match List-I with List-II.

List-I (Number)	List-II (Significant figures)
(a) 1001	(i) 4
(b) 010.1	(ii) 3
(c) 100.100	(iii) 6
(d) 0.0010010	(iv) 5

Choose the correct answer from the options given below:

A. (A)-(III), (B)-(IV), (C)-(II), (D)-(I)

B. (A)-(IV), (B)-(III), (C)-(I), (D)-(II)

C. (A)-(II), (B)-(I), (C)-(IV), (D)-(III)

D. (A)-(I), (B)-(II), (C)-(III), (D)-(IV)

Correct answer: C

Source solution

(a) 1001

All non-zero digits are significant and zeros between non-zero digits are also significant.

1001 has 4 significant figures

$(a) \rightarrow (i)$

\vspace{0.2cm}

(b) 010.1

The leading zero is not significant.

$$\mathbf{10.1}$$

contains $\mathbf{3}$ significant figures.

$$(b) \rightarrow (ii)$$

\vspace{0.2cm}

(c) 100.100

Zeros between non-zero digits and trailing zeros to the right of the decimal point are significant.

100.100 has 6 significant figures

$$(c) \rightarrow (iii)$$

\vspace{0.2cm}

(d) 0.0010010

Leading zeros are not significant, while zeros between non-zero digits and the trailing zero after the decimal point are significant.

0.0010010 has 5 significant figures

$$(d) \rightarrow (iv)$$

Therefore,

$$\boxed{(a) \rightarrow (i), \quad (b) \rightarrow (ii), \quad (c) \rightarrow (iii), \quad (d) \rightarrow (iv)}$$

Question 6

The pitch of the screw guage is 1 mm and there are 100 divisions on the circular scale. When nothing is put in between the jaws, the zero of the circular scale lines 8 divisions below the reference line. When a wire is placed between the jaws, the first linear scale division is clearly visible while 72nd division on circular scale coincides with the reference line. The radius of the wire is :

A. 1.64 mm

B. 1.80 mm

C. 0.82 mm

D. 0.90 mm

Correct answer: C

Source solution

The least count of the screw gauge is

$$\text{L.C.} = \frac{\text{Pitch}}{\text{Number of divisions on the circular scale}} = \frac{1\,\text{mm}}{100} = 0.01\,\text{mm}.$$

The positive zero error is

$$\text{Zero Error} = 8 \times \text{L.C.} = 8 \times 0.01 = 0.08\,\text{mm}.$$

The observed reading is

$$\text{Measured Reading} = 1\,\text{mm} + 72 \times \text{L.C.} = 1 + 0.72 = 1.72\,\text{mm}.$$

Therefore, the corrected reading is

$$\text{True Reading} = 1.72 - 0.08 = 1.64\,\text{mm}.$$

Hence, the radius of the wire is

$$r = \frac{1.64}{2} = 0.82\,\text{mm}.$$

$$\boxed{r = 0.82\,\text{mm}}$$

Question 7

The least count of a screw guage is 0.01 mm . If the pitch is increased by 75% and number of divisions on the circular scale is reduced by 50%, the new least count will be $\times 10^{-3}$ mm.

Numerical answer: _____

Enter an integer (0 digits after the decimal point). Round to the nearest integer where requested; enter the coefficient of any power of ten shown in the question.

Correct answer: 35

Source solution

Given least count of Screw Gauge $= 0.01$ mm

$\text{L.C} = \frac{(\text{pitch})}{\text{No. of circular turn}} = \frac{\text{P}}{\text{N}} = 0.01$ mm

New pitch $= \frac{\text{P}(1+0.75)}{\text{N}(1-0.5)} = \frac{\text{P}}{\text{N}}\left[\frac{1.75}{0.5}\right]$

$= (0.01)3.5$

$= 0.035$ mm

$= 35 \times 10^{-3}$ mm

$\therefore$ Ans. is 35

Question 8

A screw gauge has 50 divisions on its circular scale. The circular scale is 4 units ahead of the pitch scale marking, prior to use. Upon one complete rotation of the circular scale, a displacement of 0.5 mm is noticed on the pitch scale. The nature of zero error involved and the least count of the screw gauge, are respectively :

A. Positive, 0.1 mm

B. Positive, 0.1μ m

C. Positive, 10μ m

D. Negative, 2μ m

Correct answer: C

Source solution

The least count of the instrument is given by

$$\text{L.C.} = \frac{\text{Pitch}}{\text{Number of divisions on the circular scale}}.$$

Substituting the given values,

$$\text{L.C.} = \frac{0.5}{50}\,\text{mm} = 0.01\,\text{mm}.$$

Converting into metres,

$$0.01\,\text{mm} = 0.01 \times 10^{-3}\,\text{m} = 1 \times 10^{-5}\,\text{m}.$$

Since

$$1\,\mu\text{m} = 10^{-6}\,\text{m},$$

$$1 \times 10^{-5}\,\text{m} = 10\,\mu\text{m}.$$

$$\boxed{\text{L.C.} = 10\,\mu\text{m}}$$

Question 9

Match List-I with List-II.

List-I	List-II
(a) h (Planck's constant)	(i) $\left[\mathrm{ML^2I^{-1}T^{-3}}\right]$
(b) E (kinetic energy)	(ii) $\left[\mathrm{ML^2T^{-2}}\right]$
(c) V (electric potential)	(iii) $\left[\mathrm{ML^2T^{-1}}\right]$
(d) P (linear momentum)	(iv) $\left[\mathrm{MLT^{-1}}\right]$

Choose the correct answer from the options given below:

A. (a) $\rightarrow$ (ii), (b) $\rightarrow$ (iii), (c) $\rightarrow$ (iv), (d) $\rightarrow$ (i)

B. (a) $\rightarrow$ (i), (b) $\rightarrow$ (ii), (c) $\rightarrow$ (iv), (d) $\rightarrow$ (iii)

C. (a) $\rightarrow$ (iii), (b) $\rightarrow$ (ii), (c) $\rightarrow$ (iv), (d) $\rightarrow$ (i)

D. (a) $\rightarrow$ (iii), (b) $\rightarrow$ (iv), (c) $\rightarrow$ (ii), (d) $\rightarrow$ (i)

Correct answer: A

Source solution

(a) h (Planck's constant)

Using

$$E = h\nu,$$

$$[h] = \frac{[E]}{[\nu]} = \frac{ML^2T^{-2}}{T^{-1}} = ML^2T^{-1}.$$

$$\boxed{(a) \rightarrow (iii)}$$

\vspace{0.2cm}

(b) E (Kinetic Energy)

$$[E] = ML^2T^{-2}.$$

$$\boxed{(b) \to (ii)}$$

\vspace{0.2cm}

(c) V (Electric Potential)

$$V = \frac{\text{Work}}{\text{Charge}}$$

$$[V] = \frac{ML^2T^{-2}}{IT} = ML^2I^{-1}T^{-3}.$$

$$\boxed{(c) \to (i)}$$

\vspace{0.2cm}

(d) P (Linear Momentum)

$$[P] = MLT^{-1}.$$

$$\boxed{(d) \rightarrow (iv)}$$

Therefore,

$$\boxed{(a) \rightarrow (iii), \quad (b) \rightarrow (ii), \quad (c) \rightarrow (i), \quad (d) \rightarrow (iv)}$$

Question 10

The pitch and the number of divisions, on the circular scale, for a given screw gauge are 0.5 mm and 100 respectively. When the screw gauge is fully tightened without any object, the zero of its circular scale lies 3 divisions below the mean line.The readings of the main scale and the circular scale, for a thin sheet, are 5.5 mm and 48 respectively, the thickness of this sheet is :

A. 5.755 m

B. 5.725 mm

C. 5.740 m

D. 5.950 mm

Correct answer: B

Source solution

$$\text{L.C.} = \frac{\text{Pitch}}{\text{No. of divisions}} = 0.5 \times 10^{-2}\ \text{mm}.$$

Positive zero error:

$$+\text{error} = 3 \times 0.5 \times 10^{-2} = 1.5 \times 10^{-2}\ \text{mm} = 0.015\ \text{mm}.$$

Correct reading:

$$\text{Reading} = \text{MSR} + \text{CSR} - (+\text{error}).$$

$$= 5.5 + \left(48 \times 0.5 \times 10^{-2}\right) - 0.015.$$

$$= 5.5 + 0.24 - 0.015.$$

$$= 5.725\ \text{mm}.$$

$\boxed{5.725\ \text{mm}}$

Question 11

Given below are two statements : one is labelled as Assertion(A) and the other is labelled as Reason (R).Assertion (A) : In Vernier calliper if positive zero error exists, then while taking measurements, the reading taken will be more than the actual reading.Reason (R) : The zero error in Vernier Calliper might have happened due to manufacturing defect or due to rough handling.In the light of the above statements, choose the correct answer from the options given below :

A. Both (A) and (R) are correct and (R) is the correct explanation of (A)

B. Both (A) and (R) are correct but (R) is not the correct explanation of (A)

C. (A) is true but (R) is false

D. (A) is false but (R) is true

Correct answer: B

Source solution

\textbf{Assertion (A):}

If a Vernier caliper has a positive zero error, the observed reading is greater than the actual reading.

$$\boxed{\text{Assertion (A) is True}}$$

Reason:

For a positive zero error,

$$\text{Correct Reading} = \text{Observed Reading} - \text{Zero Error.}$$

Hence,

$$\text{Observed Reading} > \text{Actual Reading.}$$

\vspace{0.3cm}

\textbf{Reason (R):}

Zero error in a Vernier caliper may arise due to manufacturing defects, wear and tear, or rough handling of the instrument.

Reason (R) is True

\vspace{0.3cm}

However, the reason only states a possible cause of zero error. It does not explain why a positive zero error makes the observed reading greater than the actual reading.

Therefore,

Both A and R are true, but R is not the correct explanation of A.

Question 12

A screw gauge advances by 3 mm in 6 rotations. There are 50 divisions on circular scale. Find least count of screw gauge?

A. 0.002 cm

B. 0.001 cm

C. 0.01 cm

D. 0.02 cm

Correct answer: B

Source solution

The pitch of the screw gauge is

$$\text{Pitch} = \frac{\text{Distance moved in one complete rotation}}{\text{Number of rotations}} = \frac{3}{6}\,\text{mm} = 0.5\,\text{mm}.$$

The least count is given by

$$\text{Least Count} = \frac{\text{Pitch}}{\text{Number of divisions on the circular scale}}.$$

$$= \frac{0.5\,\text{mm}}{50} = 0.01\,\text{mm}.$$

Converting into centimetres,

$$0.01\,\text{mm} = 0.001\,\text{cm}.$$

Hence,

$$\boxed{\text{Pitch} = 0.5\,\text{mm}}$$

and

$$\boxed{\text{Least Count} = 0.01\,\text{mm} = 0.001\,\text{cm}}.$$

Motion in a Straight Line

Questions 13-25 / 13 selected / 4.3% practice weight / Focus first

Question 13

A particle excutes S.H.M with amplitude 'a' and time period T. The displacement of the particle when its speed is half of maximum speed is $\frac{\sqrt{x}a}{2}$. The value of x is

Numerical answer: _____

Enter the requested value (an integer; 0 decimal places). Use the units and scaling stated in the question.

Correct answer: 3

Source solution

Fora particle excutes S.H.M

$V = \omega\sqrt{a^2 - x^2}$

Given $V = \frac{V_{max}}{2} \Rightarrow \frac{A\omega}{2}$

$\frac{A^2\omega^2}{4} = \omega^2 a^2 - \omega^2 x^2$

$x = \frac{\sqrt{3}}{2}a$

Question 14

A balloon was moving upwards with a uniform velocity of 10 m/s. An object of finite mass is dropped from the balloon when it was at a height of 75 m from the ground level. The height of the balloon from the ground when object strikes the ground was around : (takes the value of g as $10\ \mathrm{m/s^2}$)

A. 300 m

B. 200 m

C. 125 m

D. 250 m

Correct answer: C

Source solution

$$\mathrm{u} = 10\ \mathrm{m/s/}$$

Object is projected as shown so as per motionunder gravity

$$\mathrm{S} = \mathrm{ut} + \frac{1}{2}\mathrm{at}^2$$

$$-75 = +10\mathrm{t} + \frac{1}{2}(-10)\mathrm{t}^2 \Rightarrow \mathrm{t} = 5\mathrm{sec}$$

Object takes $\mathrm{t} = 5\ \mathrm{s}$ to fall on ground Height of balloon from ground

$$\mathrm{H} = 75 + \mathrm{ut}$$

$$= 75 + 10 \times 5 = 125\ \mathrm{m}$$

Question 15

A body is moving with constant speed, in a circle of radius 10 m . The body completes one revolution in 4 s . At the end of 3rd second, the displacement of body (in m) from its starting point is:

A. 15π

B. $10\sqrt{2}$

C. 30

D. 5π

Correct answer: B

Source solution

Angular speed is

$$\omega = \frac{2\pi}{T}$$

Given,

$$T = 4\,\mathrm{s}$$

$$\omega = \frac{2\pi}{4} = \frac{\pi}{2}\,\mathrm{rad\,s^{-1}}$$

Angular displacement after $t = 3\,\mathrm{s}$:

$$\theta = \omega t$$

$$= \frac{\pi}{2} \times 3$$

$$= \frac{3\pi}{2}\,\text{rad}$$

$$\boxed{\theta = \frac{3\pi}{2}\,\text{rad}}$$

Question 16

A body of mass 2 kg is initially at rest. It starts moving unidirectionally under the influence of a source of constant power P. Its displacement in 4 s is $\frac{1}{3}\alpha^2\sqrt{Pm}$. The value of α will be .

Numerical answer: _____

Enter the requested value (an integer; 0 decimal places). Use the units and scaling stated in the question.

Correct answer: 4

Source solution

$\frac{1}{2}mv^2 = pt$

$\mathrm{V} = \sqrt{\frac{2\mathrm{pt}}{\mathrm{m}}}$

$\frac{\mathrm{dx}}{\mathrm{dt}} = \sqrt{\frac{2\mathrm{pt}}{\mathrm{m}}}$

$\int \mathrm{dx} = \sqrt{\frac{2\mathrm{p}}{\mathrm{m}}} \int \sqrt{\mathrm{t}}\mathrm{dt}$

$\mathrm{x} = \sqrt{\frac{2\mathrm{p}}{\mathrm{m}}} \left[\mathrm{t}^{3/2}\right]_0^4$

$\mathrm{x} = \frac{1}{3} \times 16\sqrt{\mathrm{p}}$

$\propto = 4$

Ans: (4)

Question 17

A bullet of 10 g , moving with velocity v, collides head-on with the stationary bob of a pendulum and recoils with velocity $100\ \mathrm{m/s}$. The length of the pendulum is 0.5 m and mass of the bob is 1 kg . The minimum value of $v =$ $\mathrm{m/s}$ so that the pendulum describes a circle. (Assume the string to be inextensible and $g = 10\ \mathrm{m/s^2}$)

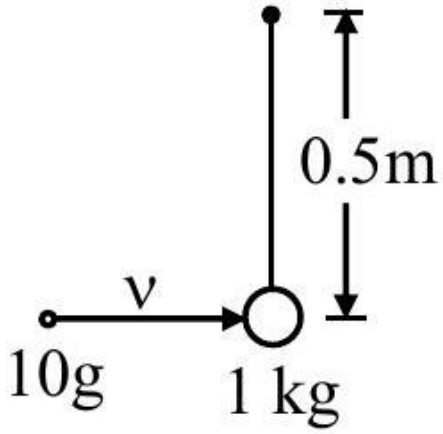

Numerical answer: _____

Enter the requested value (an integer; 0 decimal places). Use the units and scaling stated in the question.

Correct answer: 400

Source solution

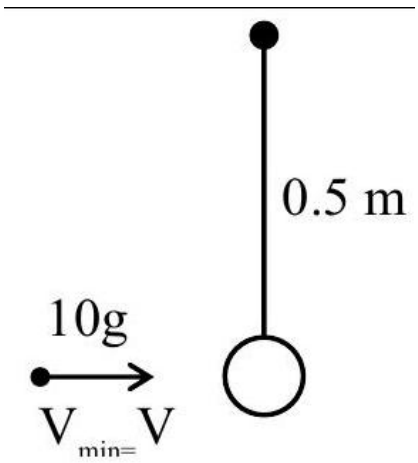

$V' = \sqrt{5gR} = \sqrt{5 \times 10 \times 0.5}$

$V' = 5\ \mathrm{m/s}$

$m_1\ V = m_2 \times 5 - m_1 \times 100$

$\frac{10}{1000} \times V = 5 - \frac{10}{1000} \times 100$
$V = 400\ m/s$

Question 18

A ball is thrown vertically upwards with a velocity of $19.6\ ms^{-1}$ from the top of a tower. The ball strikes the ground after 6 s . The height from the ground up to which the ball can rise will be $\left(\frac{k}{5}\right)m$. The value of k is ..... (use $g = 9.8\ m/s^2$)

Numerical answer: _____

Enter the requested value (an integer; 0 decimal places). Use the units and scaling stated in the question.

Correct answer: 392

Source solution

$t_a = \frac{u}{g} = \frac{19.6}{9.8} = 2\ s$
$t_d = 6 - 2\ s = \sqrt{\frac{2h_{max}}{g}}$
$\Rightarrow h_{max} = \frac{16 \times 9.8}{2} = \frac{392}{5}$

Question 19

A ball of mass 0.5 kg is dropped from the height of 10 m . The height, at which the magnitude of velocity becomes equal to the magnitude of acceleration due to gravity, is m. (Use $g = 10\ m/s^2$).

Numerical answer: _____

Enter the requested value (an integer; 0 decimal places). Use the units and scaling stated in the question.

Correct answer: 5

Source solution

$v^2 = u^2 + 2as$
$100 = 0 + 2(10)s$
$S = 5\ m$
Height from ground $= 10 - 5 = 5\ m$

Question 20

A ball is thrown vertically upward with an initial velocity of $150\ \mathrm{m/s}$. The ratio of velocity after 3 s and 5 s is $\frac{x+1}{x}$. The value of x is ..... .Take ($\mathrm{g = 10\ m/s^2}$).

A. 6

B. 5

C. -5

D. 10

Correct answer: B

Source solution

Sol.

$$\vec{v} = \vec{u} + \vec{a}t$$

$$\mathrm{V} = 150 - 10t$$

$$\mathrm{V}(3) = 150 - 30 = 120$$

$$\mathrm{V}(5) = 150 - 50 = 100$$

$$\frac{120}{100} = \frac{x+1}{x} = \frac{6}{5} \Rightarrow x = 5$$

Question 21

A body is projected from the ground at an angle of 45° with the horizontal. Its velocity after 2 s is $20\ \mathrm{ms}^{-1}$. The maximum height reached by the body during its motion is m . (use $g = 10\ \mathrm{ms}^{-2}$)

Numerical answer: _____

Enter the requested value (an integer; 0 decimal places). Use the units and scaling stated in the question.

Correct answer: 20

Source solution

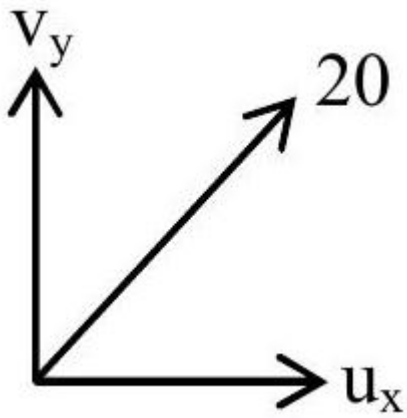

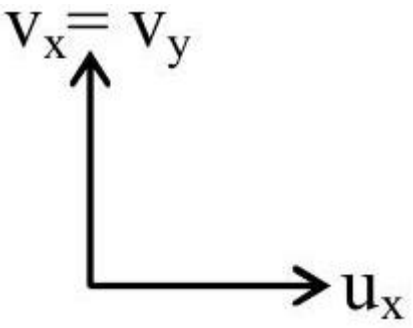

$$v_y = v_x - 20$$
$$\sqrt{(u_x - 20)^2 + u_x^2} = 20$$
$$\Rightarrow 2u_x^2 - 40u_x = 0$$
$$\therefore u_x = 20$$

Question 22

Two balls A and B are placed at the top of 180 m tall tower. Ball A is released from the top at $\mathbf{t = 0}$ s. Ball B is thrown vertically down with an initial velocity ' u ' at $t = 2$ s. After a certain time, both balls meet 100 m above the ground. Find the value of ' u ' in $\mathbf{ms^{-1}}$. [use $\mathbf{g = 10\ ms^{-2}}$] :

A. 10

B. 15

C. 20

D. 30

Correct answer: D

Source solution

Sol. Let them meet at time t.

$$t = \sqrt{\frac{2h}{g}} = \sqrt{\frac{2 \times 80}{10}} = 4\,\text{sec}$$

Time taken by ball B to meet A is $2\,\text{sec}$ using

$$S = ut + \frac{1}{2}at^2$$

$$-80 = -u \cdot 2 + \frac{1}{2}(-10)(2)^2$$

$$u = 30$$

Question 23

A small toy starts moving from the position of rest under a constant acceleration. If it travels a distance of 10 m in t s ,. the distance travelled by the toy in the next t s will be :

A. 10 m

B. 20 m

C. 30 m

D. 40 m

Correct answer: C

Source solution

Sol. $\mathbf{u = 0}$, Say acceleration is $\boldsymbol{a}$. For $\boldsymbol{t}$ s,

$$10 = \frac{1}{2}at^2$$

For $\boldsymbol{2t}$ s,

$$10 + x = \frac{1}{2}a(2t)^2$$

$$\frac{10 + x}{10} = \frac{4}{1}$$
$$x = 30\,\mathrm{m}$$

Question 24

A pendulum is suspended by a string of length 250 cm . The mass of the bob of the pendulum is 200 g . The bob is pulled aside until the string is at 60° with vertical as shown in the figure. After releasing the bob. the maximum velocity attained by the bob will be ms^{-1}.
(if $\mathrm{g} = 10\ \mathrm{m/s^2}$)

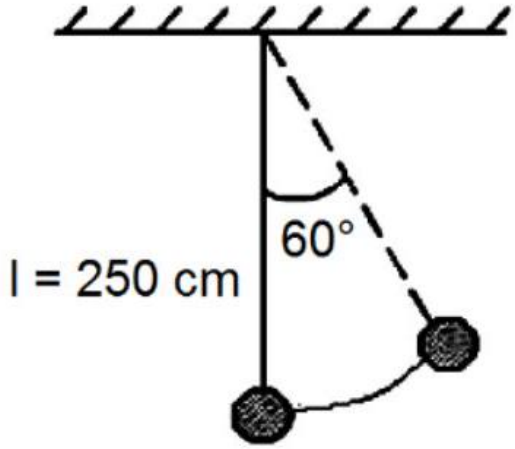

Numerical answer: _____

Enter the requested value (an integer; 0 decimal places). Use the units and scaling stated in the question.

Correct answer: 5

Source solution

$\mathrm{V_{max}} = \sqrt{2gh}$

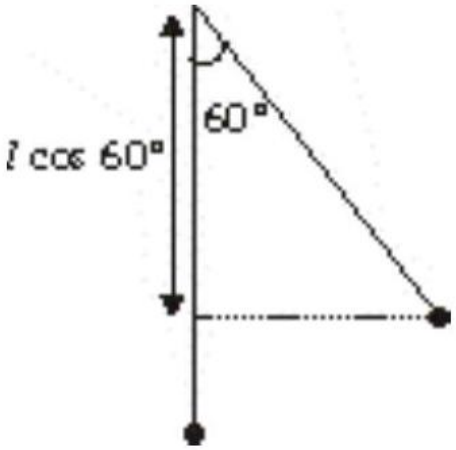

The speed will be highest at the lowest position.

$$h = (\ell - \ell\cos 60^\circ) = \frac{\ell}{2}$$
$$V_{max} = \sqrt{2 \times g \times \frac{\ell}{2}} = \sqrt{10 \times 2.5} = 5\ m/s$$

Question 25

An object is thrown vertically upwards. At its maximum height, which of the following quantity becomes zero ?

A. Momentum

B. Potential energy

C. Acceleration

D. Force

Correct answer: A

Source solution

Sol. At maximum height, $V = 0 \therefore$ the momentum of the object is zero.

Motion in a Plane

Questions 26-30 / 5 selected / 1.7% practice weight / Consolidate

Question 26

A body is projected at $t = 0$ with a velocity $10\ ms^{-1}$ at an angle of $60°$ with the horizontal. The radius of curvature of its trajectory at $t = 1\ s$ is R . Neglecting air resistance and taking acceleration due to gravity $g = 10\ ms^{-2}$, the value of R is :

A. 2.5 m

B. 10.3 m

C. 2.8 m

D. 5.1 m

Correct answer: C

Source solution

Sol.

Initial velocity components:

$$v_x = 10\cos 60° = 5\ \mathrm{m\ s^{-1}}$$

$$v_y = 10\sin 60° = 5\sqrt{3}\ \mathrm{m\ s^{-1}}$$

After $t = 1\ \mathrm{s}$,

$$v_x = 5\ \mathrm{m\ s^{-1}}$$

$$v_y = 5\sqrt{3} - 10$$

$$|v_y| = 10 - 5\sqrt{3}$$

Hence,

$$v^2 = v_x^2 + v_y^2$$

$$= 25 + (10 - 5\sqrt{3})^2$$

$$= 25 + 100 + 75 - 100\sqrt{3}$$

$$= 200 - 100\sqrt{3}$$

Let θ be the angle made by the velocity with the horizontal.

$$\tan\theta = \frac{10 - 5\sqrt{3}}{5} = 2 - \sqrt{3}$$

$$\theta = 15^\circ$$

Normal acceleration:

$$a_n = g\cos\theta$$

$$= 10\cos 15^\circ$$

Using

$$a_n = \frac{v^2}{R}$$

$$R = \frac{v^2}{a_n} = \frac{200 - 100\sqrt{3}}{10\cos 15^\circ}$$

$$= \frac{100(2 - \sqrt{3})}{10\cos 15^\circ}$$

$$\boxed{R \approx 2.8\,\text{m}}$$

Question 27

A body of mass 100 g is moving in circular path of radius 2 m on vertical plane as shown in figure. The velocity of the body at point A is $10\ \mathrm{m/s}$. The ratio of its kinetic energies at point B and C is :(Take acceleration due to gravity as $10\ \mathrm{m/s^2}$)

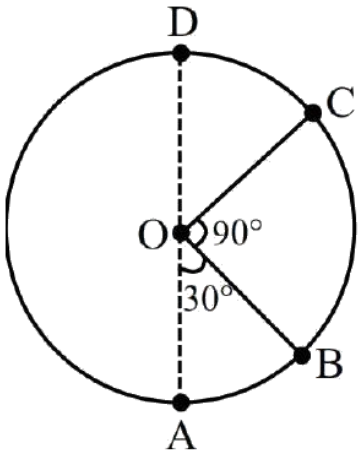

A. $\frac{2+\sqrt{3}}{3}$

B. $\frac{2+\sqrt{2}}{3}$

C. $\frac{3+\sqrt{3}}{2}$

D. $\frac{3-\sqrt{2}}{2}$

Correct answer: C

Source solution

$$\frac{1}{2}\mathrm{m} \times 100 + 0 = \frac{1}{2}\mathrm{m}V_{\mathrm{B}}^2 + \mathrm{mg}\left(R - \frac{R\sqrt{3}}{2}\right)$$

$$100 = V_{\mathrm{B}}^2 + 2gR\left(1 - \frac{\sqrt{3}}{2}\right)$$

$$V_{\mathrm{B}}^2 = 100 - 20\left(2 - \sqrt{3}\right)$$

$$V_{\mathrm{B}}^2 = 60 + 20\sqrt{3}$$

$$\mathrm{K \cdot E_B} = \frac{1}{2}\mathrm{m}V_\mathrm{B}^2 = \frac{\mathrm{m}}{2}\left(60 + 20\sqrt{3}\right)$$

$$\frac{1}{2}\mathrm{m}(100) = \frac{1}{2}\mathrm{m}V_\mathrm{C}^2 + \mathrm{mg}\left(\frac{3R}{2}\right)$$

$$100 = V_\mathrm{C}^2 + 60$$

$$V_\mathrm{C}^2 = 40$$

$$\mathrm{K \cdot E_C} = \frac{1}{2}\mathrm{m}V_\mathrm{C}^2 = \frac{1}{2}\mathrm{m}(40)$$

$$\mathrm{K \cdot E_B} = \frac{60 + 20\sqrt{3}}{40} = \frac{3}{2} + \frac{\sqrt{3}}{2} = \frac{3 + \sqrt{3}}{2}$$

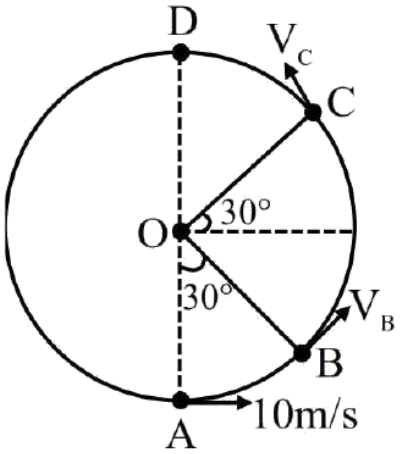

Question 28

A block of mass M slides down on a rough inclined plane with constant velocity. The angle made by the incline plane with horizontal is θ. The magnitude of the contact force will be :

A. Mg

B. $\mathrm{Mg}\cos\theta$

C. $\sqrt{\mathrm{Mg}\sin\theta + \mathrm{Mg}\cos\theta}$

D. $\mathrm{Mg}\sin\theta\sqrt{1+\mu}$

Correct answer: A

Source solution

Sol.

Since the block slides with constant velocity,

$$a = 0$$

Hence, the net force along the incline is zero.

$$mg\sin\theta = f$$

where f is the frictional force.

The normal reaction is

$$N = mg\cos\theta$$

The contact force is the resultant of the normal reaction and friction:

$$F_c = \sqrt{N^2 + f^2}$$

$$= \sqrt{(mg\cos\theta)^2 + (mg\sin\theta)^2}$$

$$= mg\sqrt{\cos^2\theta + \sin^2\theta}$$

$$= mg$$

$$\boxed{F_c = mg}$$

Question 29

A projectile is projected at 30° from horizontal with initial velocity $40\ \mathrm{ms}^{-1}$. The velocity of the projectile at $\mathrm{t} = 2\ \mathrm{s}$ from the start will be:(Given $\mathrm{g} = 10\ \mathrm{m/s}^2$)

A. $20\sqrt{3}\ \mathrm{ms}^{-1}$

B. $40\sqrt{3}\ \mathrm{ms}^{-1}$

C. $20\ \mathrm{ms}^{-1}$

D. Zero

Correct answer: A

Source solution

Sol.

Time to reach maximum height:

$$t_{\max} = \frac{u \sin\theta}{g}$$

$$= \frac{40 \sin 30^\circ}{10} = 2\,\mathrm{s}$$

Hence, at

$$t = 2\,\mathrm{s},$$

the particle is at the highest point of its trajectory.

At maximum height,

$$v_y = 0$$

and only the horizontal component remains:

$$v = v_x = u\cos\theta$$

$$= 40\cos 30^\circ$$

$$= 40 \cdot \frac{\sqrt{3}}{2}$$

$$= 20\sqrt{3}\,\mathrm{m\,s^{-1}}$$

Question 30

A projectile fired at 30° to the ground is observed to be at same height at time 3 s and 5 s after projection, during its flight. The speed of projection of the projectile is ms^{-1}
(Given $g = 10\ \mathrm{m\ s}^{-2}$)

Numerical answer: _____

Enter the requested value (an integer; 0 decimal places). Use the units and scaling stated in the question.

Correct answer: 80

Source solution

Time of flight $t_1 + t_2 = 3 + 5 = 8\mathrm{sec}$

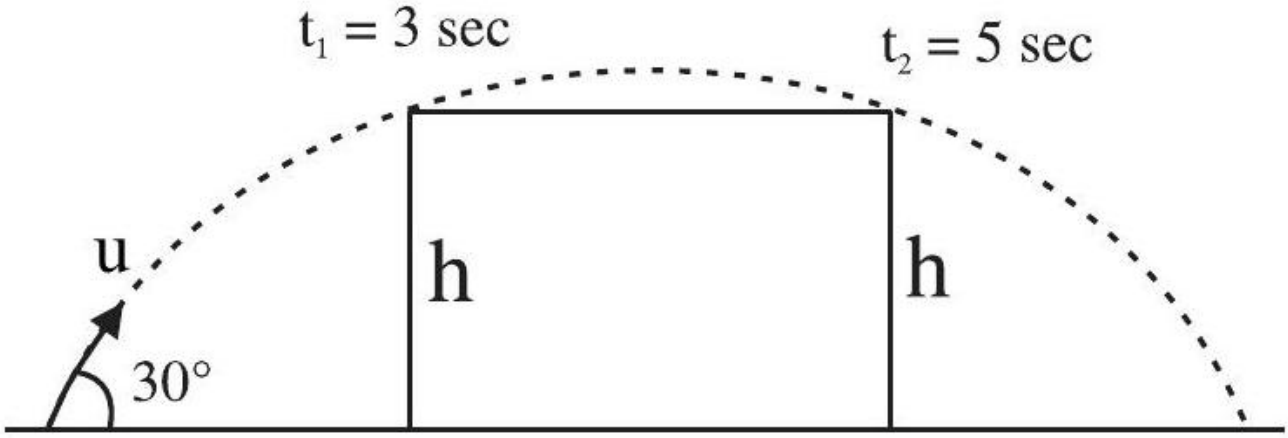

$$T = \frac{2u \sin 30^\circ}{g}$$
$$8 = \frac{2u \sin (30^\circ)}{10}$$
$$u = 80\ \mathrm{m/s}$$

Laws of Motion

Questions 31-45 / 15 selected / 5.0% practice weight / Focus first

Question 31

A body of mass ' m ' is launched up on a rough inclined plane making an angle of 30° with the horizontal. The coefficient of friction between the body and plane is $\frac{\sqrt{x}}{5}$ if the time of ascent is half of the time of descent. The value of x is ___.

Numerical answer: _____

Enter the requested integer (0 decimal places).

Correct answer: 3

Source solution

$t_a = \frac{1}{2} t_d$

$$\sqrt{\frac{2s}{a_a}} = \frac{1}{2}\sqrt{\frac{2s}{a_d}}$$

$$a_a = g\sin\theta + \mu g\cos\theta$$

$$= \frac{g}{2} + \frac{\sqrt{3}}{2}\mu g$$

$$a_d = g\sin\theta - \mu g\cos\theta$$

$$= \frac{g}{2} - \frac{\sqrt{3}}{2}\mu g$$

using the above values of a_a and a_d and putting in equation (i) we will gate $\mu = \frac{\sqrt{3}}{5}$

Question 32

A block is fastened to a horizontal spring. The block is pulled to a distance $x = 10\ \text{cm}$ from its equilibrium position (at $x = 0$) on a frictionless surface from rest. The energy of the block at $x = 5\ \text{cm}$ is 0.25 J. The spring constant of the spring is Nm^{-1}

Numerical answer: _____

Enter the requested value (an integer; 0 decimal places). Use the units and scaling stated in the question.

Correct answer: 50

Source solution

(50)
Given

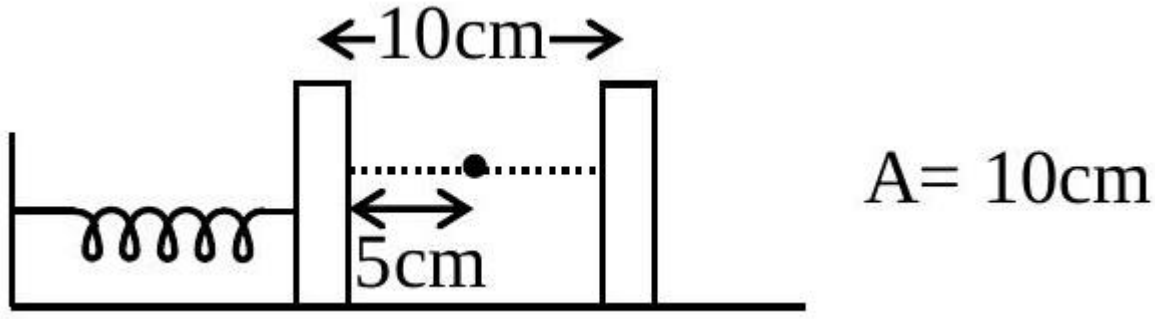

At any instant total energy for free oscillation remains constant $= \frac{1}{2}kA^2$

$\Rightarrow \frac{1}{2}kA^2 = 0.25\ \text{J}$

$\Rightarrow \frac{1}{2}kA^2 = 0.25\ \text{J} \Rightarrow K = \frac{0.25\times 2}{A^2}$

$\Rightarrow k = \frac{0.50}{(10\ \text{cm})^2} = \frac{0.50}{(10\times 10^{-2})} = \frac{0.50\times 10^4}{100}$

$k = 0.50 \times 100 = 50\ \text{N/m}$

Question 33

Figures (a), (b), (c) and (d) show variation of force with time.The impulse is highest in figure.

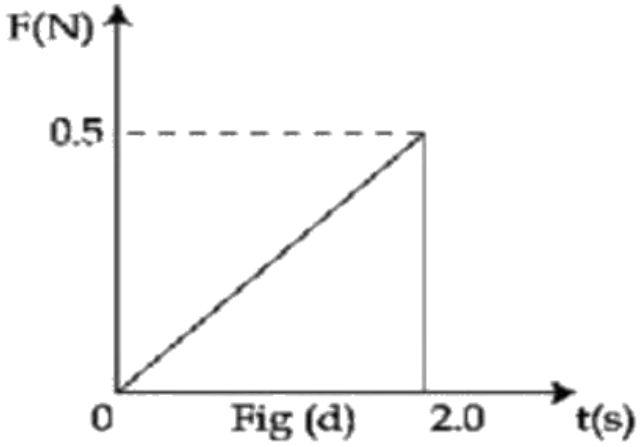

A. Fig (c)

B. Fig (b)

C. Fig (d)

D. Fig (a)

Correct answer: B

Source solution

Sol. (2) As we know that impulse is given by

$$I = \Delta \mathrm{P} = \mathrm{F} \cdot \Delta t$$

or

$$I = \text{Area of f-t graph}$$

For fig (a):

$$I = \frac{1}{2} \cdot \text{base} \cdot \text{height} = \frac{1}{2} \cdot 0.5 \cdot 1 = 0.25\,\mathrm{N} \cdot \mathrm{s}$$

For fig (b):

$$I = \text{length} \cdot \text{width} = 2 \cdot 0.5 = 1\,\text{N} \cdot \text{s}$$

For fig (c):

$$I = \frac{1}{2} \cdot \text{base} \cdot \text{height} = \frac{1}{2} \cdot 1 \cdot 0.75 = 0.375\,\text{N} \cdot \text{s}$$

For fig (d):

$$I = \frac{1}{2} \cdot \text{base} \cdot \text{height} = \frac{1}{2} \cdot 2 \cdot 0.5 = 0.5\,\text{N} \cdot \text{s}$$

Impulse is highest for that figure whose area under F-t is maximum, i.e., figure (b). Option (2) is correct.

Question 34

A force acts for 20 s on a body of mass 20 kg , starting from rest, after which the force ceases and then body describes 50 m in the next 10 s . The value of force will be:

A. 40 N

B. 5 N

C. 20 N

D. 10 N

Correct answer: B

Source solution

Sol. (2)

$$50 = V \times 10$$
$$V = 5\,m/s$$
$$V = 0 + a \times 20$$
$$5 = a \times 20$$
$$a = \frac{1}{4}\,m/s^2$$
$$F = ma = 20 \times \frac{1}{4} = 5\,N$$

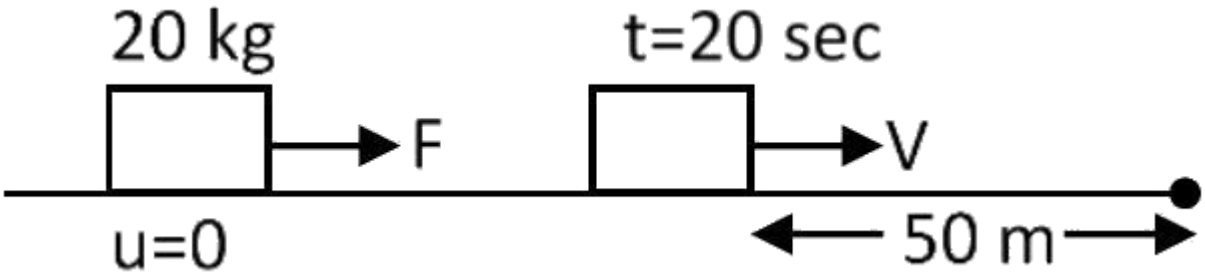

Question 35

In the given arrangement of a doubly inclined plane two blocks of masses M and m are placed. The blocks are connected by a light string passing over an ideal pulley as shown. The coefficient of friction between the surface of the plane and the blocks is 0.25 . The value of m , for which $\mathbf{M = 10}$ kg will move down with an acceleration of $\mathbf{2\ m/s^2}$, is : (take $\mathbf{g = 10\ m/s^2}$ and $\mathbf{\tan 37^\circ = 3/4}$)

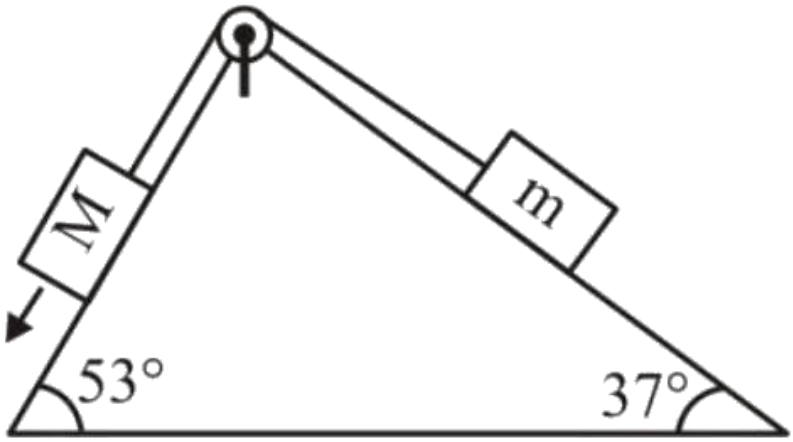

A. 9 kg

B. 4.5 kg

C. 6.5 kg

D. 2.25 kg

Correct answer: B

Source solution

$$\text{For } M \text{ block: } 10\,\text{g} \cdot \sin 53^\circ - \mu(10\,\text{g}) \cdot \cos 53^\circ - T = 10 \cdot 2$$

$$T = 80 - 15 - 20$$

$$T = 45\,\text{N}$$

$$\text{For } m \text{ block: } T - mg \cdot \sin 37^\circ - \mu mg \cdot \cos 37^\circ = m \cdot 2$$

$$45 = 10\,m$$

$m = 4.5\,\text{kg}$

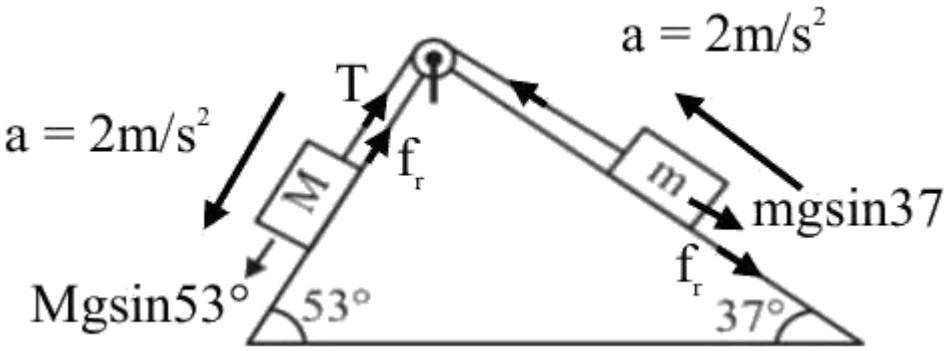

Question 36

A uniform rod AB of mass 2 kg and Length 30 cm at rest on a smooth horizontal surface. An impulse of force 0.2 Ns is applied to end B . The time taken by the rod to turn through at right angles will be $\frac{\pi}{x}$s, where $x =$.

Numerical answer: _____

Enter the requested value (an integer; 0 decimal places). Use the units and scaling stated in the question.

Correct answer: 4

Source solution

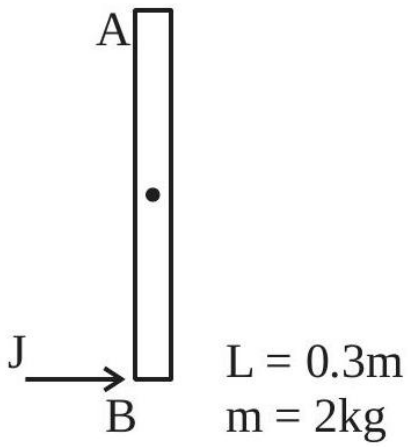

Impulse $\mathbf{J = 0.2\ N - S}$

$\mathbf{J = \int F dt = 0.2\ N - s}$

Angular impuls ($\overrightarrow{\mathbf{M}}$)

$\overrightarrow{\mathbf{M}}_{\mathbf{c}} = \int \tau \mathbf{dt}$

$= \int F \frac{L}{2} dt$

$= \frac{\mathrm{L}}{2} \int \mathbf{F dt} = \frac{\mathrm{L}}{2} \times \mathbf{J}$

$= \frac{0.3}{2} \times 0.2$

$= 0.03$

$\mathbf{I_{cm}} = \frac{\mathbf{ML^2}}{12} = \frac{2 \times (0.3)^2}{12} = \frac{0.09}{6}$

$M = I_{cm}(\omega_f - \omega_i)$

$0.03 = \frac{0.09}{6}(\omega_f)$

$\omega_{\mathrm{f}} = 2\mathrm{rad/s}$

$\theta = \omega t$

$\mathrm{t}=\frac{\theta}{\omega}=\frac{\pi}{2\times 2}=\frac{\pi}{4}\mathrm{sec.}$
$\mathrm{X}=4$

Question 37

A steel rod has a radius of 20 mm and a length of 2.0 m . A force of 62.8 kN stretches it along its length. Young's modulus of steel is $2.0\times 10^{11}\ \mathrm{N/m^2}$. The longitudinal strain produced in the wire is $\times 10^{-5}$

Numerical answer: _____

Enter the requested value (an integer; 0 decimal places). Use the units and scaling stated in the question.

Correct answer: 25

Source solution

$$\text{Strain}=\frac{\text{stress}}{Y}=\frac{\frac{62.8\times 10^3}{\pi\times(0.02)^2}}{2\times 10^{11}}$$
$$=\frac{62.8\times 10^3}{3.14\times 4\times 10^{-4}\times 2\times 10^{11}}$$
$$=2.5\times 10^{-4}$$
$$=25\times 10^{-5}$$

Question 38

A bullet of mass 0.1 kg moving horizontally with speed $400\ \mathrm{ms}^{-1}$ hits a wooden block of mass 3.9 kg kept on a horizontal rough surface. The bullet gets embedded into the block and moves 20 m before coming to rest. The coefficient of friction between the block and the surface is ..... .(Given $\mathrm{g} = 10\ \mathrm{ms}^{2}$)

A. 0.50

B. 0.90

C. 0.65

D. 0.25

Correct answer: D

Source solution

Using conservation of momentum during collision:

$$P_i = P_f$$

$$(0.1)(400) = (0.1 + 3.9)v$$

$$40 = 4v$$

$$v = 10\,\mathrm{m/s}$$

After collision, the system moves with retardation due to friction:

$$a = \frac{\mu mg}{m} = \mu g$$

Using equation of motion:

$$v^2 = u^2 + 2as$$

Final velocity becomes zero after distance $s = 20\,\mathrm{m}$:

$$0 = (10)^2 - 2\mu g \cdot 20$$

$$100 = 40\mu g$$

Taking $g = 10\,\mathrm{m/s^2}$:

$$100 = 40\mu \cdot 10$$

$$100 = 400\mu$$

$$\boxed{\mu = \frac{1}{4}}$$

Question 39

A mass of 10 kg is suspended vertically by a rope of length 5 m from the roof. A force of 30 N is applied at the middle point of rope in horizontal direction. The angle made by upper half of the rope with vertical is $\theta = \tan^{-1}\left(x \times 10^{-1}\right)$. The value of x is .
(Given $g = 10\ m/s^2$)

Numerical answer: _____

Enter the requested value (an integer; 0 decimal places). Use the units and scaling stated in the question.

Correct answer: 3

Source solution

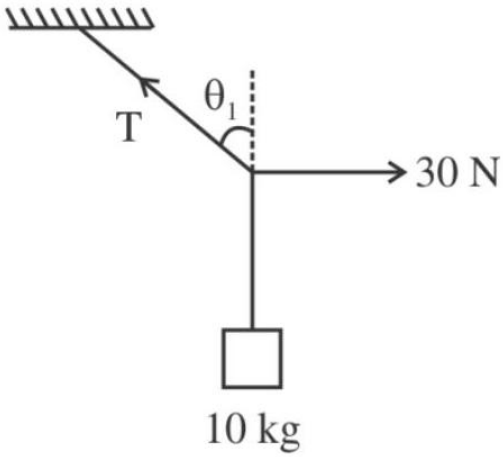

$T\sin\theta = 30$
$T\cos\theta = 100$
$\Rightarrow \quad \tan\theta = 0.3$

Question 40

A body of mass 500 g moves along x -axis such that it's velocity varies with displacement x according to the relation $\mathbf{v = 10\sqrt{x}m/s}$ the force acting on the body is:-

A. 166 N

B. 25 N

C. 125 N

D. 5 N

Correct answer: B

Source solution

Sol. $v = 10\sqrt{x} \Rightarrow v^2 = 100x$

$$2v\frac{dv}{dx} = 100 \Rightarrow a = 50\,\mathrm{m/s^2}$$

$\mathbf{F = 25\,N}$

Question 41

An object of mass 5 kg is thrown vertically upwards from the ground. The air resistance produces a constant retarding force of 10 N throughout the motion. The ratio of time of ascent to the time of descent will be equal to : [Use $\mathbf{g = 10\ ms^{-2}}$]

A. $\mathbf{1 : 1}$

B. $\mathbf{\sqrt{2} : \sqrt{3}}$

C. $\mathbf{\sqrt{3} : \sqrt{2}}$

D. $\mathbf{2 : 3}$

Correct answer: B

Source solution

Let the mass of the object be $m = 5\ \text{kg}$, the acceleration due to gravity be $g = 10\ \text{m/s}^2$, and the constant air resistance force be $F = 10\ \text{N}$.

The retardation caused by air resistance is:

$$a_r = \frac{F}{m} = \frac{10}{5} = 2\ \text{m/s}^2$$

During the ascent (moving upwards):
Both gravity (g) and air resistance (a_r) act in the downward direction, opposing the motion. The total downward acceleration is:

$$a_1 = g + a_r = 10 + 2 = 12\ \text{m/s}^2$$

Let h be the maximum height reached. Using the equations of motion for the upward journey:

$$h = \frac{1}{2} a_1 t_1^2 \implies t_1 = \sqrt{\frac{2h}{a_1}}$$

where t_1 is the time of ascent.

During the descent (moving downwards):
Gravity (g) acts downwards, while air resistance (a_r) acts upwards to oppose the falling motion. The net downward acceleration is:

$$a_2 = g - a_r = 10 - 2 = 8\ \text{m/s}^2$$

Using the equations of motion for the downward journey from the maximum height h:

$$h = \frac{1}{2} a_2 t_2^2 \implies t_2 = \sqrt{\frac{2h}{a_2}}$$

where t_2 is the time of descent.

Taking the ratio of the time of ascent to the time of descent:

$$\frac{t_1}{t_2} = \frac{\sqrt{\frac{2h}{a_1}}}{\sqrt{\frac{2h}{a_2}}} = \sqrt{\frac{a_2}{a_1}}$$

Substituting the values of a_1 and a_2:

$$\frac{t_1}{t_2} = \sqrt{\frac{8}{12}} = \sqrt{\frac{2}{3}}$$

$$\boxed{\frac{t_1}{t_2} = \sqrt{\frac{2}{3}}}$$

Question 42

A rectangular block of mass 5 kg attached to a horizontal spiral spring executes simple harmonic motion of amplitude 1 m and time period 3.14 s . The maximum force exerted by spring on block is N.

Numerical answer: _____

Enter the requested value (an integer; 0 decimal places). Use the units and scaling stated in the question.

Correct answer: 20

Source solution

$$\therefore \mathrm{T}=3.14=\pi$$

$$\begin{aligned}
\mathrm{T}=\pi=\frac{2\pi}{\omega} &\Rightarrow \omega=2 \\
\mathrm{F_{max}} &= \mathrm{ma_{max}} \\
&= \mathrm{m}\left(\mathrm{A}\omega^2\right) \\
&= \mathrm{mA}(2)^2 \\
&= 5\times 1\times 4 \\
&= 20\ \mathrm{N}
\end{aligned}$$

Question 43

A force on an object of mass 100 g is $(10\hat{i} + 5\hat{j})\mathrm{N}$. The position of that object at $t = 2$ s is $(a\hat{i} + b\hat{j})\mathrm{m}$ after starting from rest. The value of $\frac{a}{b}$ will be

Numerical answer: _____

Enter the requested value (an integer; 0 decimal places). Use the units and scaling stated in the question.

Correct answer: 2

Source solution

$\overrightarrow{F} = 10\hat{i} + 5\hat{j}$

$m = 100\ g = 0.1\ kg$

$\vec{a} = \frac{\vec{F}}{m} = 100\hat{i} + 50\hat{j}$

$\vec{S} = \vec{u}t + \frac{1}{2}\vec{a}t^2 = \frac{1}{2}\vec{a}t^2 (\text{ as } \vec{u} = 0)$

$= \frac{1}{2}(100\hat{i} + 50\hat{j})2^2$

$= 200\hat{i} + 100\hat{j}$

$= a\hat{i} + b\hat{j}$

$a = 200,\ b = 100$

$\therefore \frac{a}{b} = 2$

Question 44

A block of mass 10 kg starts sliding on a surface with an initial velocity of $9.8\ \mathrm{ms}^{-1}$. The coefficient of friction between the surface and bock is 0.5 . The distance covered by the block before coming to rest is : [use $\mathrm{g} = 9.8\ \mathrm{ms}^{-2}$]

A. 4.9 m

B. 9.8 m

C. 12.5 m

D. 19.6 m

Correct answer: B

Source solution

The acceleration due to friction is

$$a = -\mu g = -0.5 \times 9.8 = -4.9\,\mathrm{m\,s}^{-2}$$

Using the equation of motion,

$$v^2 = u^2 + 2as$$

At the stopping point, final velocity $v = 0$. Hence,

$$0 = (9.8)^2 + 2(-4.9)d$$

$$(9.8)^2 = 9.8d$$

$$\boxed{d = 9.8\,\mathrm{m}}$$

Question 45

Mercury is filled in a tube of radius 2 cm up to a height of 30 cm . The force exerted by mercury on the bottom of the tube is N.
(Given, atmospheric pressure $= 10^5 \mathrm{Nm}^{-2}$, density of mercury $= 1.36 \times 10^4 \mathrm{~kg~m}^{-3}, \mathrm{~g} = 10 \mathrm{~ms}^{-2}$, $\pi = \frac{22}{7}$)

Numerical answer: _____

Enter the requested value (an integer; 0 decimal places). Use the units and scaling stated in the question.

Correct answer: 177

Source solution

$$
\begin{aligned}
& F = P_0 A + \rho_m g h A \\
& = 10^5 \times \frac{22}{7} \times \left(2 \times 10^{-2}\right)^2 \\
& + 1.36 \times 10^4 \times 10 \times \left(30 \times 10^{-2}\right)\left(\frac{22}{7} \times \left(2 \times 10^{-2}\right)^2\right) \\
& \mathrm{F} = 51.29 + 125.71 = 177 \mathrm{~N}
\end{aligned}
$$

Work, Energy and Power

Questions 46-60 / 15 selected / 5.0% practice weight / Focus first

Question 46

A body at rest is moved along a horizontal straight line by a machine delivering a constant power. The distance moved by the body in time 't' is proportional to :

A. $t^{\frac{3}{2}}$

B. $t^{\frac{1}{2}}$

C. $t^{\frac{1}{4}}$

D. $t^{\frac{3}{4}}$

Correct answer: A

Source solution

$P = \text{constant}$

$$\frac{1}{2}mv^2 = Pt$$
$$\Rightarrow v \propto \sqrt{t}$$
$$\frac{dx}{dt} = C\sqrt{t} \quad C = \text{ constant by integration}$$
$$x = C\frac{t^{\frac{1}{2}+1}}{\frac{1}{2}+1}$$

$x \propto t^{3/2}$

Question 47

A body of mass 2 kg moving with a speed of 4 m/s. makes an elastic collision with another body at rest and continues to move in the original direction but with one fourth of its initial speed. The speed of the two body centre of mass is $\frac{x}{10}\ \mathbf{m/s}$. Then the value of x is ___.

Numerical answer: _____

Enter the requested integer (0 decimal places).

Correct answer: 25

Source solution

$\mathbf{p_i = p_f}$

$$2 \times 4 = 2 \times 1 + m_2 \times v_2$$
$$m_2 v_2 = 6 \ldots\ldots (\mathrm{i})$$

by coefficient of restitution

$$1 = \frac{v_2 - 1}{4} \Rightarrow v_2 = 5\ \mathrm{m/s}$$

by (i)

$$\mathbf{m_2 \times 5 = 6}$$
$$\mathbf{m_2 = 1.2\ kg}$$
$$\mathbf{v_{cm} = \frac{m_1 v_1 + m_2 v_2}{m_1 + m_2}}$$
$$\mathbf{v_{cm} = \frac{2 \times 1 + 1.2 \times 5}{2 + 1.2} = \frac{8}{3.2} = \frac{25}{10}}$$
$$\mathbf{x = 25}$$

Question 48

A body of mass 4 kg is placed on a plane at a point P having coordinate $(3, 4)\mathrm{m}$. Under the action of force $\vec{\mathrm{F}} = (2\hat{\mathrm{i}} + 3\hat{\mathrm{j}})\mathrm{N}$, it moves to a new point Q having coordinates $(6, 10)\mathrm{m}$ in 4 sec . The average power and instantaneous power at the end of 4 sec are in the ratio of :

A. $13 : 6$

B. $6 : 13$

C. $1 : 2$

D. $4 : 3$

Correct answer: B

Source solution

Sol.

Given,

$$\vec{F} = 2\hat{i} + 3\hat{j}\ \mathrm{N}$$

and

$$m = 4\,\mathrm{kg}$$

Hence, the acceleration is

$$\vec{a} = \frac{\vec{F}}{m}$$

$$\vec{a} = \frac{1}{2}\hat{i} + \frac{3}{4}\hat{j}$$

Assuming the particle starts from rest,

$$\vec{v} = \vec{a}t$$

At $t = 4\,\text{s}$,

$$\vec{v} = \left(\frac{1}{2}\hat{i} + \frac{3}{4}\hat{j}\right)4$$

$$\vec{v} = 2\hat{i} + 3\hat{j}$$

Instantaneous power at $t = 4\,\text{s}$:

$$P_{\text{ins}} = \vec{F} \cdot \vec{v}$$

$$= (2\hat{i} + 3\hat{j}) \cdot (2\hat{i} + 3\hat{j})$$

$$= 4 + 9$$

$$= 13\,\text{W}$$

Displacement in $4\,\text{s}$:

$$\vec{s} = \frac{1}{2}\vec{a}t^2$$

$$= \frac{1}{2}\left(\frac{1}{2}\hat{i} + \frac{3}{4}\hat{j}\right)(4)^2$$

$$= 4\hat{i} + 6\hat{j}$$

Average power:

$$\langle P \rangle = \frac{\vec{F} \cdot \vec{s}}{t}$$

$$= \frac{(2\hat{i} + 3\hat{j}) \cdot (4\hat{i} + 6\hat{j})}{4}$$

$$= \frac{8 + 18}{4}$$

$$= \frac{26}{4}$$

$$= \frac{13}{2}\ \mathrm{W}$$

Therefore,

$$\frac{\langle P \rangle}{P_{\text{ins}}} = \frac{\frac{13}{2}}{13} = \boxed{\frac{1}{2}}$$

Note: If the question states the final position as

$$(6, 10),$$

then the given data are inconsistent with

$$\vec{F} = 2\hat{i} + 3\hat{j}, \quad m = 4\,\text{kg}, \quad u = 0.$$

Using the force data, the correct displacement after $4\,\text{s}$ is

$$\boxed{\vec{s} = 4\hat{i} + 6\hat{j}}.$$

Question 49

A spherical body of mass 2 kg starting from rest acquires a kinetic energy of 10000 J at the end of 5th second. The force acted on the body is N.

Numerical answer: _____

Enter the requested value (an integer; 0 decimal places). Use the units and scaling stated in the question.

Correct answer: 40

Source solution

40
Impulse $= \Delta \mathrm{P}$
$\mathrm{F}\Delta\mathrm{T} = \mathrm{P} - \mathrm{O} \Rightarrow \mathrm{F}\Delta\mathrm{T} = \sqrt{2\mathrm{mk}}$
$\mathrm{F}(5) = \sqrt{2 \times 2 \times 10000}$
$\mathrm{F} = 40\ \mathrm{N}$

Question 50

A block of mass 5 kg is placed at rest on a table of rough surface. Now, if a force of 30 N is applied in the direction parallel to surface of the table, the block slides through a distance of 50 m in an interval of time 10 s . Coefficient of kinetic friction is (given, $\mathbf{g = 10\ ms^{-2}}$):

A. 0.60

B. 0.25

C. 0.75

D. 0.50

Correct answer: D

Source solution

Sol. (D)

$$\mathbf{S = ut + \frac{1}{2}at^2}$$

$$50 = 0 \cdot t + \frac{1}{2} \cdot a \cdot (10)^2$$

$$50 = \frac{1}{2} \cdot a \cdot 100$$

$$a = \frac{100}{100} \Rightarrow a = 1\,\mathrm{m/s^2}$$

$$\mathbf{\sum F_x = ma_x}$$

$$\mathbf{30 - \mu mg = ma}$$

$$30 - \mu \cdot 50 = 5$$

$$50\mu = 25$$

$$\mu = \frac{25}{50} = \frac{1}{2} \Rightarrow \mu = 0.5$$

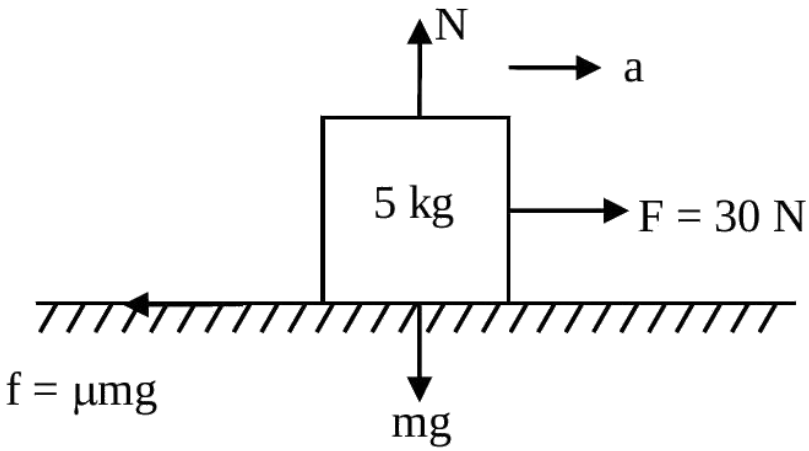

Question 51

An object of mass ' m ' initially at rest on a smooth horizontal plane starts moving under the action of force $F = 2$ N . In the process of its linear motion, the angle θ (as shown in figure) between the direction of force and horizontal varies as $\theta = kx$, where k is constant and x is the distance covered by the object from the initial positon. The expression of kinetic energy of the object will be $E = \frac{n}{k}\sin\theta$, The value of n is .

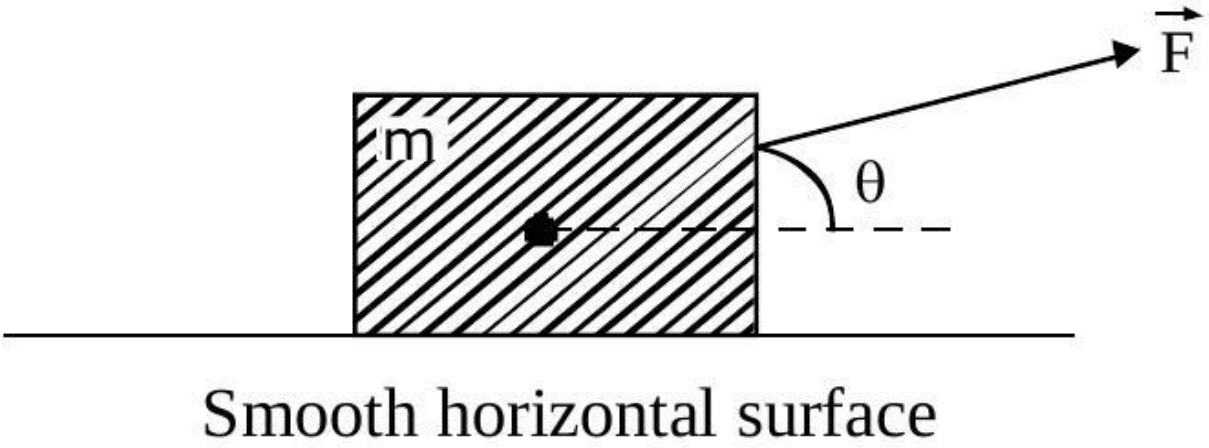

Numerical answer: _____

Enter the requested value (an integer; 0 decimal places). Use the units and scaling stated in the question.

Correct answer: 2

Source solution

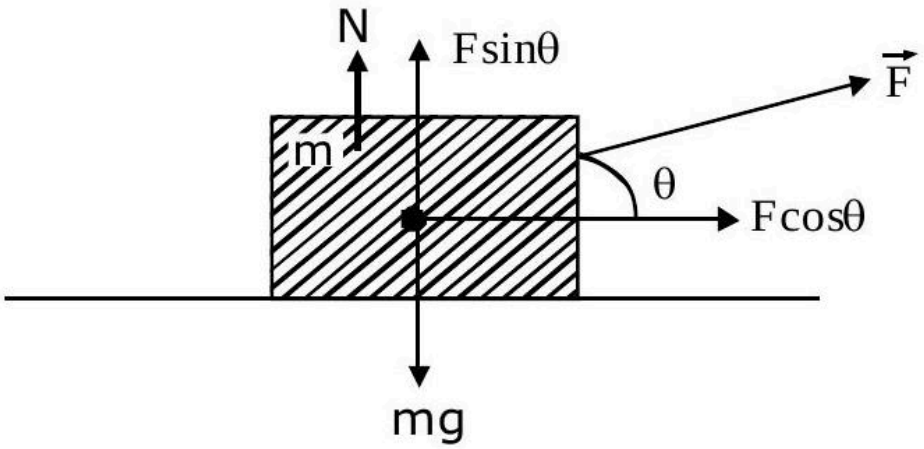

$F_x = 2\cos kx$

$F_y = 2\sin kx - mg$

According to Work Energy Theorem, $\Delta K = \Delta W$

Taking motion only along horizontal direction(X) i.e., linear motion as mentioned in question,

$\Delta K = \int_0^x F_x dx$

$K_f - K_i = \int_0^x 2\cos kx dx = \frac{2\sin kx}{k}$

Hence $K_i = 0, \therefore K_f = \frac{2\sin kx}{k}$

$\therefore n = 2$

Question 52

The bob of a pendulum was released from a horizontal position. The length of the pendulum is 10 m . If it dissipates 10% of its initial energy against air resistance, the speed with which the bob arrives at the lowest point is : [Use, $\mathbf{g : 10\ ms^{-2}}$]

A. $6\sqrt{5}\ \mathrm{ms}^{-1}$

B. $5\sqrt{6}\ \mathrm{ms}^{-1}$

C. $5\sqrt{5}\ \mathrm{ms}^{-1}$

D. $2\sqrt{5}\ \mathrm{ms}^{-1}$

Correct answer: A

Source solution

Sol.

Length of the pendulum,

$$\ell = 10\,\mathrm{m}$$

Initial potential energy (taking the lowest point as reference) is

$$E_i = mg\ell$$

Given that 10% of the energy is lost, the remaining energy is

$$E_f = \frac{9}{10}mg\ell$$

At the lowest point, this energy becomes kinetic energy:

$$\frac{9}{10}mg\ell = \frac{1}{2}mv^2$$

Substituting

$$\ell = 10\,\mathrm{m}, \qquad g = 10\,\mathrm{m/s^2},$$

$$\frac{9}{10} \times m \times 10 \times 10 = \frac{1}{2}mv^2$$

$$90m = \frac{1}{2}mv^2$$

$$v^2 = 180$$

$$v = \sqrt{180}$$

$$\boxed{v = 6\sqrt{5}\,\mathrm{m/s}}$$

Question 53

A particle is placed at the point A of a frictionless track ABC as shown in figure. It is gently pushed toward right. The speed of the particle when it reaches the point B is : (Take $\mathbf{g = 10\ m/s^2}$).

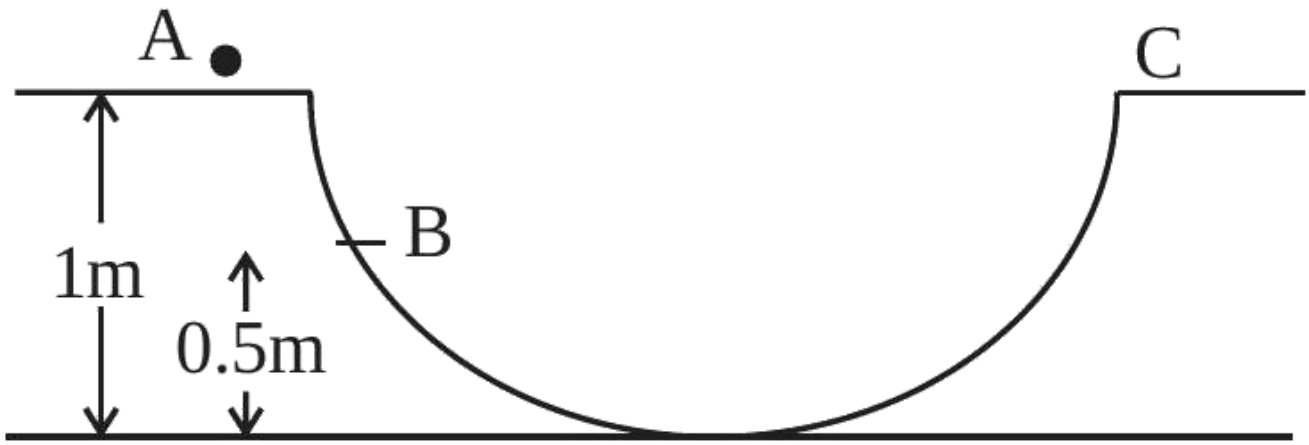

A. $20\ \mathrm{m/s}$

B. $\sqrt{10}\ \mathrm{m/s}$

C. $2\sqrt{10}\ \mathrm{m/s}$

D. $10\ \mathrm{m/s}$

Correct answer: B

Source solution

Sol. By conservation of energy,

$$\mathbf{KE_A + U_A = KE_B + U_B}$$

$$0 + mg(1) = \frac{1}{2}mv^2 + mg \cdot 0.5$$

$$v = \sqrt{g} = \sqrt{10\ \mathrm{m/s^2}}$$

Question 54

A block of mass ' m ' (as shown in figure) moving with kinetic energy E compresses a spring through a distance 25 cm when, its speed is halved. The value of spring constant of used spring will be $\mathbf{nENm^{-1}}$ for $\mathbf{n} =$.

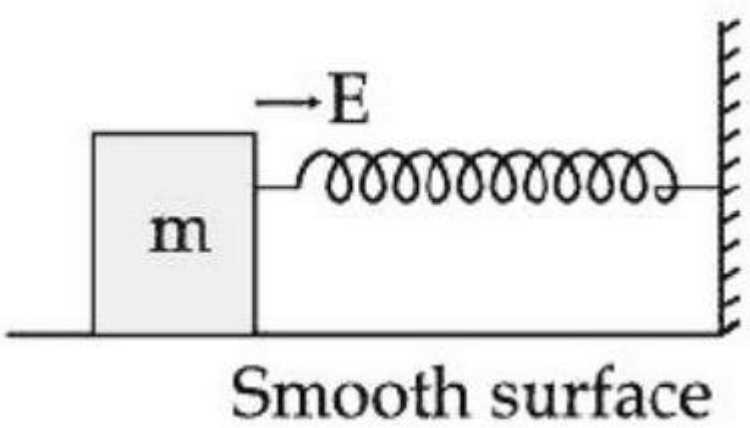

Numerical answer: _____

Enter the requested value (an integer; 0 decimal places). Use the units and scaling stated in the question.

Correct answer: 24

Source solution

Using work - energy theorem

$\mathbf{W_{net}} = (\mathbf{K_f} - \mathbf{K_i})$

$\Rightarrow -\frac{1}{2}Kx^2 = \frac{1}{2}m\left(\frac{v}{2}\right)^2 - \frac{1}{2}mv^2 = \frac{E}{4} - E$

$\Rightarrow \frac{1}{2}\mathbf{Kx^2} = \frac{\mathbf{3E}}{4} \Rightarrow \mathbf{K} = \frac{\mathbf{3E}}{\mathbf{2x^2}}$

$\Rightarrow \mathbf{K} = \frac{\mathbf{3E}}{\mathbf{2\times\left(\frac{1}{4}\right)^2}} = \mathbf{24E}$

$\mathbf{n = 24}$

Question 55

A uniform chain of length 3 meter and mass 3 kg overhangs a smooth table with 2 meter laying on the table. If k is the kinetic energy of the chain in joule as it completely slips off the table, then the value of k is (Take $g = 10\ m/s^2$)

Numerical answer: _____

Enter the requested value (an integer; 0 decimal places). Use the units and scaling stated in the question.

Correct answer: 40

Source solution

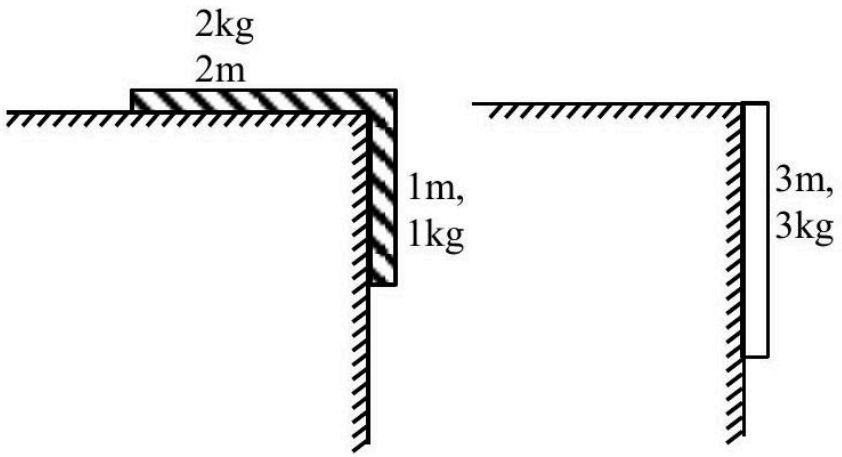

From energy conservation

$K_i + U_i = k_f + U_f$

$0 + \left(-1 \times 10 \times \frac{1}{2}\right) = k_f + \left(-3 \times 10 \times \frac{3}{2}\right)$

$-5 = k_f - 45$

$k_f = 40\ J$

Ans. 40.00

Question 56

A body of mass 2 kg is driven by an engine delivering a constant power of $1\ \mathrm{J/s}$. The body starts from rest and moves in a straight line. After 9 seconds, the body has moved a distance (in m)

.

Numerical answer: _____

Enter the requested value (an integer; 0 decimal places). Use the units and scaling stated in the question.

Correct answer: 18

Source solution

18

P = Fv = mav

$\mathrm{a}=\frac{\mathrm{p}}{\mathrm{mv}}$

$\frac{dv}{dt}=\frac{p}{mv}$

$\int_0^u vdv=\frac{p}{m}\int_0^t dt$

$\frac{\mathrm{u}^2}{2}=\frac{\mathrm{p}}{\mathrm{m}}\mathrm{t}$

$u=\sqrt{\frac{2p}{m}}\sqrt{t}$

$\frac{\mathrm{dx}}{\mathrm{dt}}=\sqrt{\frac{\varphi}{\mathrm{m}}}\sqrt{\mathrm{t}}$

$\int_0^{\mathrm{x}}\mathrm{dx}=\sqrt{\frac{2\mathrm{p}}{\mathrm{m}}}\int_0^9\sqrt{\mathrm{t}}\mathrm{dt}$

$x=\frac{2}{3}\left[(9)^{1/2}\right]^3$

$=\frac{2}{3}\times 27$

$\mathrm{x}=18$

II-method

$\mathrm{Pt}=\mathrm{w}=\frac{1}{2}\mathrm{mv}^2-0$

$1\times t=\frac{1}{2}\times 2\times u^2$

$\mathrm{u}=\sqrt{\mathrm{t}}$

$\frac{\mathrm{dx}}{\mathrm{dt}}=\sqrt{\mathrm{t}}=\int_0^1\mathrm{dx}=\int_0^9\sqrt{\mathrm{t}}\mathrm{dt}$

$x=\frac{\left[t^{3/2}\right]_0^9}{\frac{3}{2}}=18\ \mathrm{m}$

Question 57

A block of mass 40 kg slides over a surface, when a mass of 4 kg is suspended through an inextensible massless string passing over frictionless pulley as shown below. The coefficient of kinetic friction between the surface and block is 0.02 . The acceleration of block is. (Given $\mathbf{g = 10\ ms^{-2}}$.)

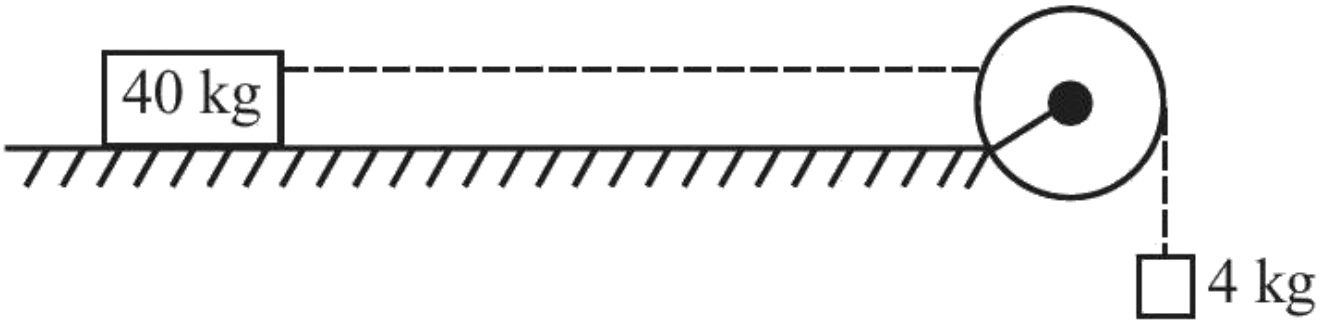

A. $1\ \mathrm{ms}^{-2}$

B. $1/5\ \mathrm{ms}^{-2}$

C. $4/5\ \mathrm{ms}^{-2}$

D. $8/11\ \mathrm{ms}^{-2}$

Correct answer: D

Source solution

$$\text{For } 4\,\text{kg block: } 4\,\text{g} - T = 4a$$

$$\text{For } 40\,\text{kg block: } T - 40\,\text{g} \cdot 0.02 = 40a$$

$$\text{Adding both equations: } 40 - 8 = 44a$$

$$a = \frac{32}{44} = \frac{8}{11}\ \text{m/s}^2$$

Question 58

A block of mass 5 kg starting from rest pulled up on a smooth incline plane making an angle of 30° with horizontal with an affective acceleration of 1 ms^{-2}. The power delivered by the pulling force at $t = 10\ s$ from the start is W.

[Use $g = 10\ \mathrm{ms}^{-2}$]

(calculate the nearest integer value)

Numerical answer: _____

Enter the requested value or coefficient rounded to the nearest integer (0 decimal places).

Correct answer: 300

Source solution

$F - 5\,g\sin 30^\circ = 5a \Rightarrow F = 5 + 25 = 30\ N$

$V_{10} = u + at \Rightarrow v_{10} = 0 + 1(10) = 10\ m/s$

$P_{10} = Fv = 300\ W$

Question 59

The pressure and volume of an ideal gas are related as $\mathbf{PV^{3/2} = K}$ (Constant). The work done when the gas is taken from state $\mathbf{A\,(P_1,\ V_1,\ T_1)}$ to state $\mathbf{B\,(P_2,\ V_2,\ T_2)}$ is :

A. $\mathbf{2\,(P_1\,V_1 - P_2\,V_2)}$

B. $\mathbf{2\,(P_2\,V_2 - P_1\,V_1)}$

C. $\mathbf{2\left(\sqrt{P_1}\,V_1 - \sqrt{P_2}\,V_2\right)}$

D. $2\left(P_2\sqrt{V_2} - P_1\sqrt{V_1}\right)$

Correct answer: A

Source solution

For $\mathbf{PV^x}$ = constant
If work done by gas is asked then

$$\mathbf{W = \frac{nR\Delta\,T}{1 - x}}$$

Here $\mathbf{x = \frac{3}{2}}$
$\therefore \mathbf{W = \frac{P_2\,V_2 - P_1\,V_1}{-\frac{1}{2}}}$
$= \mathbf{2\,(P_1\,V_1 - P_2\,V_2)}$ .... Option (1) is correct
If work done by external is asked then
$\mathbf{W = -2\,(P_1\,V_1 - P_2\,V_2)}$ .... Option (2) is correct

Question 60

A bi convex lens of focal length 10 cm is cut in two identical parts along a plane perpendicular to the principal axis. The power of each lens after cut is D.

Numerical answer: _____

Enter the requested value (an integer; 0 decimal places). Use the units and scaling stated in the question.

Correct answer: 5

Source solution



Let power of each part is $\mathbf{P_1}$, then

$\mathbf{P_1 + P_1 = P = \frac{1}{f}}$

$\mathbf{2P_1 = \frac{1}{0.1} = 10}$

$\mathbf{P_1 = 5D}$

System of Particles and Rotational Motion

Questions 61-76 / 16 selected / 5.3% practice weight / Focus first

Question 61

A bob of mass ' m ' is suspended by a light string of length ' L '. It is imparted a minimum horizontal velocity at the lowest point A such that it just completes half circle reaching the top most position B. The ratio of kinetic energies $\frac{(\text{K.E.})_A}{(\text{K.E.})_B}$ is :

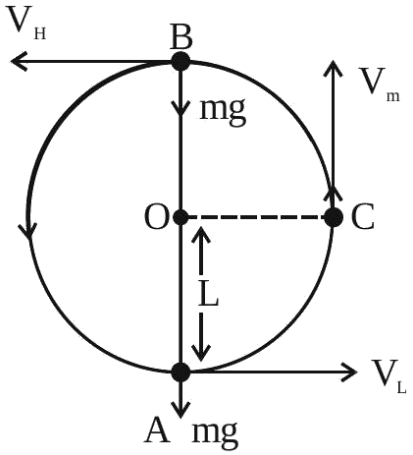

A. $3:2$

B. $5:1$

C. $2:5$

D. $1:5$

Correct answer: B

Source solution

Sol. Apply energy conservation between A & B

$$\frac{1}{2}mV_{\mathrm{L}}^2=\frac{1}{2}mV_{\mathrm{H}}^2+mg(2L)$$

$\because V_{\mathrm{L}}=\sqrt{5gL}$

So,

$$V_{\mathrm{H}}=\sqrt{gL}$$

$$\frac{(K.E)_{\mathrm{A}}}{(K.E)_{\mathrm{B}}}=\frac{\frac{1}{2}m(\sqrt{5gL})^2}{\frac{1}{2}m(\sqrt{gL})^2}=\frac{5}{1}$$

Question 62

A block of mass 10 kg is suspended from a string of length 4 m . When pulled by a force F along horizontal from the midpoint. The upper half of the string makes 45° with the vertical, value of F is

A. $100\ \mathrm{N}$

B. 90 N

C. $75\ \mathrm{N}$

D. 70 N

Correct answer: A

Source solution

Sol.

At the point of equilibrium, resolve the tension T into horizontal and vertical components.

Since the string makes an angle of 45°,

$$T_x = T\cos 45^\circ = \frac{T}{\sqrt{2}}$$

$$T_y = T\sin 45^\circ = \frac{T}{\sqrt{2}}$$

For horizontal equilibrium,

$$\frac{T}{\sqrt{2}} = F$$

Given,

$$T = 100\sqrt{2}\,\mathrm{N}$$

Therefore,

$$F = \frac{100\sqrt{2}}{\sqrt{2}}$$

$$\boxed{F = 100\,\mathrm{N}}$$

Question 63

Let the moment of inertia of a hollow cylinder of length 30 cm (inner radius 10 cm and outer radius 20 cm), about its axis be I . The radius of a thin cylinder of the same mass such that its moment of inertia about its axis is also I, is:

A. 12 cm

B. 18 cm

C. 16 cm

D. 14 cm

Correct answer: C

Source solution

Sol.

For a hollow cylinder of mass M, inner radius

$$R_1 = 10\,\text{cm}$$

and outer radius

$$R_2 = 20\,\text{cm},$$

the moment of inertia about its axis is

$$I = \frac{1}{2}M\left(R_1^2 + R_2^2\right)$$

$$I = \frac{1}{2}M\left(10^2 + 20^2\right)$$

$$I = \frac{1}{2}M(100 + 400)$$

$$I = 250M$$

Let the radius of the thin cylinder be r.

For a thin cylindrical shell,

$$I = Mr^2$$

Equating the two moments of inertia,

$$Mr^2 = 250M$$

$$r^2 = 250$$

$$r = 5\sqrt{10}\,\text{cm}$$

Hence,

$$\boxed{r = 5\sqrt{10}\,\text{cm}}$$

$$\boxed{r \approx 15.8\,\text{cm}}$$

Question 64

A bob of mass m is suspended at a point O by a light string of length l and left to perform vertical motion (circular) as shown in figure. Initially, by applying horizontal velocity v_0 at the point ' A '. the string becomes slack when, the bob reaches at the point ' D '. The ratio of the kinetic energy of the bob at the points B and C is ..... .

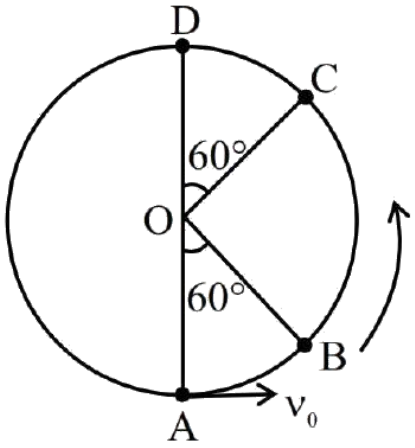

A. 2

B. 1

C. 4

D. 3

Correct answer: A

Source solution

Using conservation of mechanical energy between points A and B,

$$\frac{1}{2}mv_A^2 = \frac{1}{2}mv_B^2 + mgh$$

Substituting $v_A^2 = 5g\ell$ and $h = \frac{\ell}{2}$,

$$\frac{1}{2}m(5g\ell) = \frac{1}{2}mv_B^2 + mg\frac{\ell}{2}$$

$$\frac{5mg\ell}{2} - \frac{mg\ell}{2} = \frac{1}{2}mv_B^2$$

$$\mathrm{KE}_B = \frac{1}{2}mv_B^2 = 2mg\ell$$

Similarly, between points C and D,

$$\frac{1}{2}mv_C^2 = \frac{1}{2}mv_D^2 + mg\frac{\ell}{2}$$

Hence,

$$\mathrm{KE}_C = \frac{1}{2}mg\ell + mg\frac{\ell}{2} = mg\ell$$

Therefore,

$$\frac{\mathrm{KE}_B}{\mathrm{KE}_C} = \frac{2mg\ell}{mg\ell} = 2$$

$$\boxed{\frac{\mathrm{KE}_B}{\mathrm{KE}_C} = 2}$$

Question 65

A body of mass ' m ' connected to a massless and unstretchable string goes in verticle circle of radius ' R ' under gravity g . The other end of the string is fixed at the center of circle. If velocity at top of circular path is $n\sqrt{gR}$, where, $n \geq 1$, then ratio of kinetic energy of the body at bottom to that at top of the circle is

A. $\frac{n}{n+4}$

B. $\frac{n+4}{n}$

C. $\frac{n^2}{n^2+4}$

D. $\frac{n^2+4}{n^2}$

Correct answer: D

Source solution

$$V_{\text{top}} = \sqrt{n^2gR}$$

Using conservation of mechanical energy between the top and bottom of the loop,

$$\frac{1}{2}mV_{\text{bottom}}^2 = \frac{1}{2}mV_{\text{top}}^2 + mg(2R)$$

$$V_{\text{bottom}}^2 = V_{\text{top}}^2 + 4gR = n^2gR + 4gR$$

$$V_{\text{bottom}} = \sqrt{(n^2+4)gR}$$

Therefore,

$$\frac{V_{\text{bottom}}}{V_{\text{top}}} = \frac{\sqrt{(n^2+4)gR}}{\sqrt{n^2gR}} = \sqrt{\frac{n^2+4}{n^2}}$$

$$\boxed{\frac{V_{\text{bottom}}}{V_{\text{top}}}=\sqrt{\frac{n^2+4}{n^2}}}$$

Question 66

A tube of length 1 m is filled completely with an ideal liquid of mass 2 M , and closed at both ends. The tube is rotated uniformly in horizontal plane about one of its ends. If the force exerted by the liquid at the other end is F then angular velocity of the tube is $\sqrt{\frac{F}{\alpha M}}$ in SI unit. The value of α is

.

Numerical answer: _____

Enter the requested value (an integer; 0 decimal places). Use the units and scaling stated in the question.

Correct answer: 1

Source solution



$\mathrm{F}=2\mathrm{M}\omega^2\frac{\ell}{2}=\mathrm{Mw}^2\ell$

$\omega=\sqrt{\frac{\mathrm{F}}{\mathrm{M}\ell}}$

Question 67

A rod of mass M and length L is lying on a horizontal frictionless surface. A particle of mass 'm' travelling along the surface hits at one end of the rod with a velocity 'u' in a direction perpendicular to the rod. The collision is completely elastic. After collision, particle comes to rest. The ratio of masses $\left(\frac{m}{M}\right)$ is $\frac{1}{x}$. The value of 'x' will be ___.

Numerical answer: _____

Enter the requested integer (0 decimal places).

Correct answer: 4

Source solution

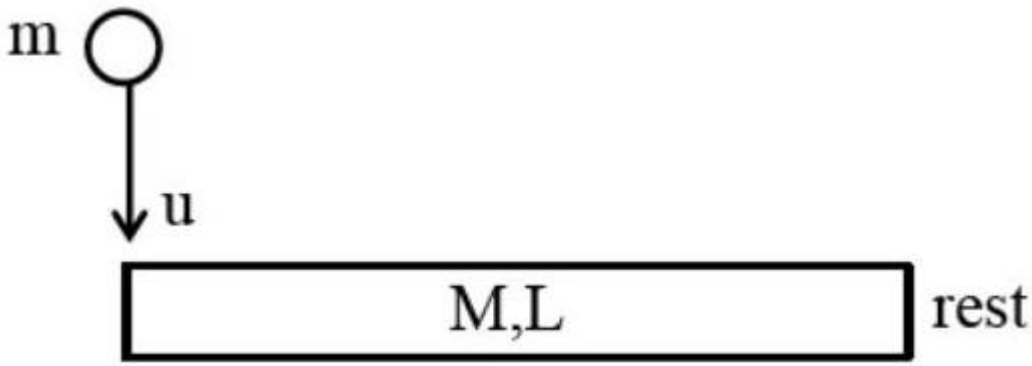

Just before collision

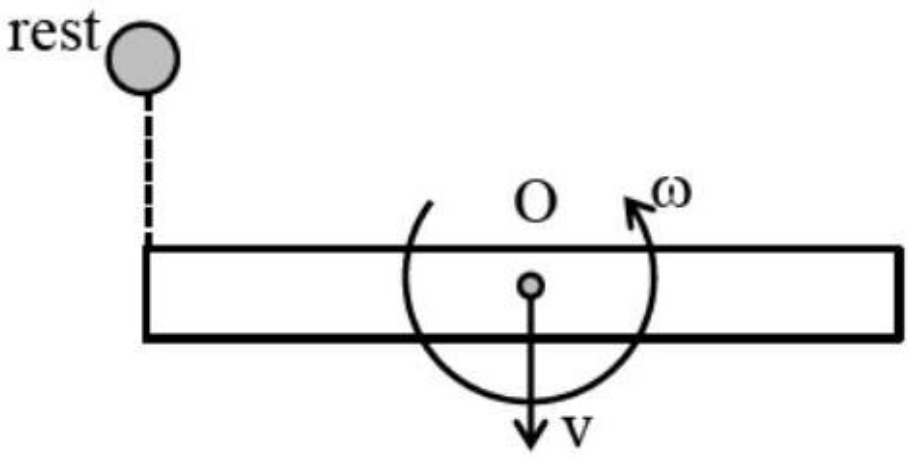

Just after collision From momentum conservation, $\mathbf{P_1^0 = P_f}$

$$\mathbf{mu = Mv}$$

From angular momentum conservation about O,

$$\mathrm{mu} \cdot \frac{\mathrm{L}}{2} = \frac{\mathrm{ML}^2}{12}\omega$$
$$\Rightarrow \omega = \frac{6\mathrm{mu}}{\mathrm{ML}}$$

From $\mathbf{e} = \frac{\text{R.V.S.}}{\text{R.V.A.}}$

$$1 = \frac{\mathrm{v} + \frac{\omega \mathrm{L}}{2}}{\mathrm{u}}$$
$$\mathrm{v} + \frac{\omega \mathrm{L}}{2} = \mathrm{u}$$
$$\mathrm{v} + \frac{3\mathrm{mu}}{\mathrm{M}} = \mathrm{u}$$
$$\frac{\mathrm{mu}}{\mathrm{M}} + \frac{3\mathrm{mu}}{\mathrm{M}} = \mathrm{u}$$
$$\frac{4\mathrm{mu}}{\mathrm{M}} = \mathrm{u}$$
$$\frac{\mathrm{m}}{\mathrm{M}} = \frac{1}{4}$$
$$\mathrm{X} = 4$$

Question 68

An object of mass 8 kg hanging from one end of a uniform rod CD of mass 2 kg and length 1 m pivoted at its end C on a vertical walls as shown in figure. It is supported by a cable AB such that the system is in equilibrium. The tension in the cable is:(Take $\mathbf{g = 10\ m/s^2}$)

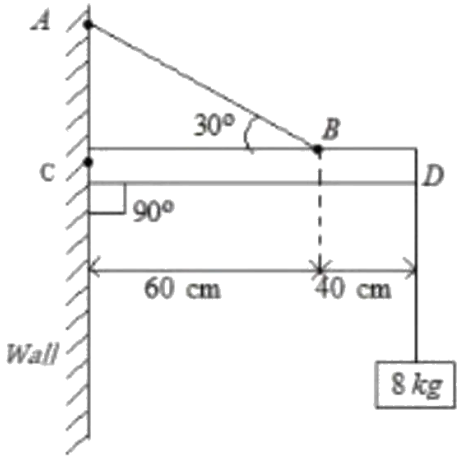

A. 90 N

B. 30 N

C. 300 N

D. 240 N

Correct answer: C

Source solution

Sol. 3 The rod is in equilibrium. So, net torque about any point will be zero.

$$\tau_c = 0$$

$$\mathbf{Mg \cdot 50 + 80 \cdot 100 = T \cdot \sin 30^\circ \cdot 30}$$

$$\mathbf{20 \cdot 50 + 80 \cdot 100 = \frac{T}{2} \cdot 60}$$

$$\mathbf{T = \frac{900}{3} = 300\,N}$$

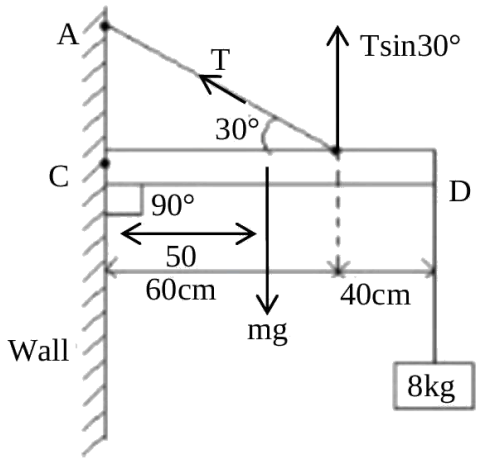

Question 69

A 2 kg steel rod of length 0.6 m is clamped on a table vertically at its lower end and is free to rotate in vertical plane. The upper end is pushed so that the rod falls under gravity, Ignoring the friction due to clamping at its lower end, the speed of the free end of rod when it passes through its lowest position is ___ $\mathbf{ms}^{-1}$. (Take $\mathbf{g = 10\ ms^{-2}}$)

Numerical answer: _____

Enter the requested integer (0 decimal places).

Correct answer: 6

Source solution



ω



by energy conservation $\mathbf{mg\ell} = \frac{1}{2}\mathbf{I}\omega^2 = \frac{1}{2}\frac{\mathbf{m}\ell^2\omega^2}{3}$

$$\Rightarrow \omega = \sqrt{\frac{6g}{\ell}}$$

Speed $\mathbf{v} = \omega \mathbf{r} = \omega \ell = \sqrt{6\ \mathbf{g}\ell}$

$$v = \sqrt{6 \times 10 \times .6} = 6\ \mathbf{m/s}$$

Question 70

A string of area of cross-section $\mathbf{4\ mm^2}$ and length 0.5 is connected with a rigid body of mass 2 kg . The body is rotated in a vertical circular path of radius 0.5 m . The body acquires a speed of $\mathbf{5\ m/s}$ at the bottom of the circular path. Strain produced in the string when the body is at the bottom of the circle is $\times 10^{-5}$. (Use Young's modulus $10^{11}\ \mathbf{N/m^2}$ and $\mathbf{g = 10\ m/s^2}$)

Numerical answer: _____

Enter the requested value (an integer; 0 decimal places). Use the units and scaling stated in the question.

Correct answer: 30

Source solution

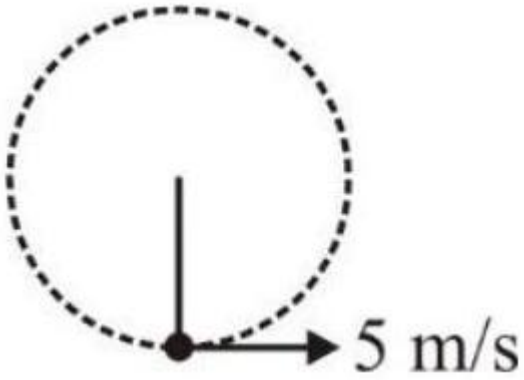

Strain $= \mathbf{F/AY}$

$= \frac{mg + \frac{mv^2}{R}}{AY}$

$= \frac{20 + \frac{2(5)^2}{0.5}}{3 \times 10^{-6} \times 10^{11}} = 30 \times 10^{-5}$

Question 71

A stone of mass 900 g is tied to a string and moved in a vertical circle of radius 1 m making 10 rpm . The tension in the string, when the stone is at the lowest point is (if $\pi^2 = 9.8$ and $\mathbf{g} = 9.8\ \mathbf{m/s^2}$)

A. 97 N

B. 9.8 N

C. 8.82 N

D. 17.8 N

Correct answer: B

Source solution

Sol.

Given,

$$m = 900\,\mathrm{g} = \frac{900}{1000}\,\mathrm{kg} = 0.9\,\mathrm{kg}$$

$$r = 1\,\mathrm{m}$$

$$N = 10\,\mathrm{rpm}$$

Angular speed,

$$\omega = \frac{2\pi N}{60} = \frac{2\pi(10)}{60} = \frac{\pi}{3}\,\mathrm{rad\ s^{-1}}$$

For the mass moving in a vertical circle, at the lowest point,

$$T - mg = mr\omega^2$$

Therefore,

$$T = mg + mr\omega^2$$

Substituting the values,

$$T = 0.9(9.8) + 0.9(1)\left(\frac{\pi}{3}\right)^2$$

$$= 8.82 + 0.9\left(\frac{\pi^2}{9}\right)$$

Using

$$\pi^2 \approx 9.8,$$

$$T = 8.82 + 0.98$$

$$T = 9.80\,\mathrm{N}$$

Hence,

$$\boxed{T = 9.8\,\mathrm{N}}$$

Question 72

Shown in the figure is rigid and uniform one meter long rod AB held in horizontal position by two strings tied to its ends and attached to the ceiling. The rod is of mass ' m ' and has another weight of mass 2 m hung at a distance of 75 cm from A. The tension in the string at A is:

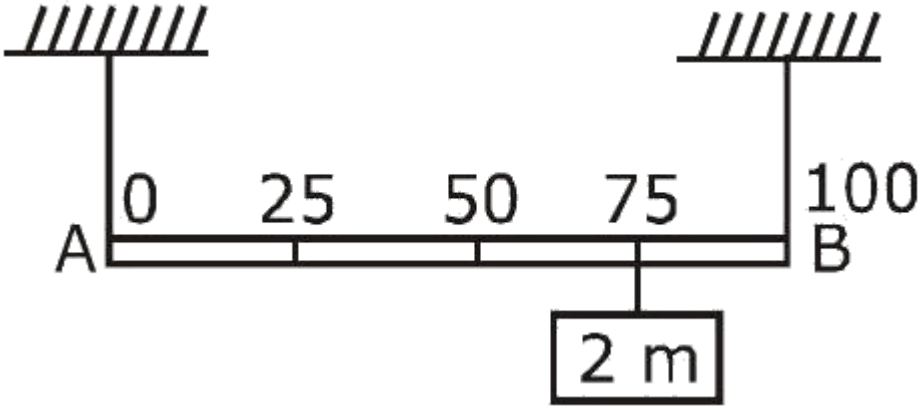

A. 0.75 mg

B. 0.5 mg

C. 1 mg

D. 2 mg

Correct answer: C

Source solution

Sol.

For rotational equilibrium about point B,

$$\tau_{\text{net}} = 0$$

Taking moments about B,

$$T \times 100\,\text{cm} = mg \times 50\,\text{cm} + 2mg \times 25\,\text{cm}$$

$$100T = 50mg + 50mg$$

$$100T = 100mg$$

$$T = 1mg$$

Hence,

$$\boxed{T = 1mg}$$

Question 73

A bead of mass m stays at point $P(a, b)$ on a wire bent in the shape of a parabola $y = 4Cx^2$ and rotating with angular speed ω (see figure). The value of ω is (neglect friction):

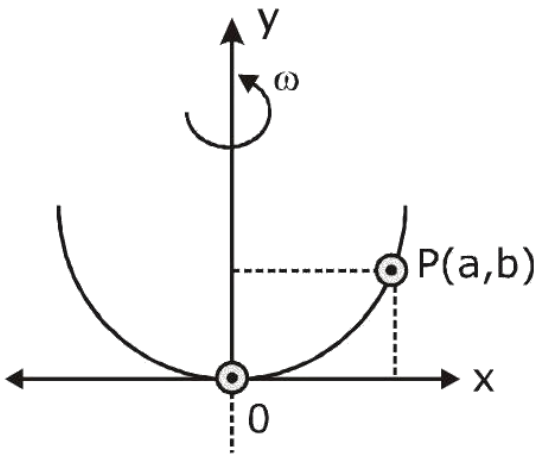

A. $\sqrt{\frac{2g}{C}}$

B. $2\sqrt{gC}$

C. $\sqrt{\frac{2gC}{ab}}$

D. $2\sqrt{2gC}$

Correct answer: D

Source solution

Sol.

$$y = 4cx^2$$
$$\frac{dy}{dx} = 8cx$$

$$\tan\theta = \frac{m\omega^2 a}{mg}$$

$$\tan\theta = \frac{dy}{dx} = 8cx$$

$$8cx = \frac{\omega^2 a}{g}$$

$(x = a), \quad 8ca = \frac{\omega^2 a}{g}$

$$\sqrt{8cg} = \omega$$

$$2\sqrt{2gc} = \omega$$

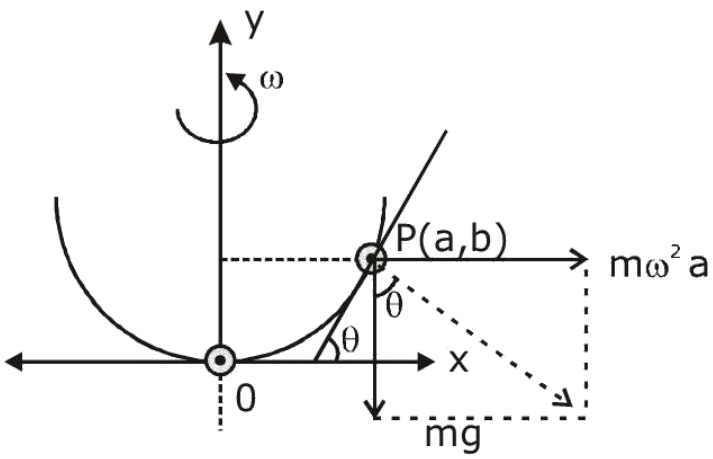

Question 74

A thin rod of mass 0.9 kg and length 1 m is suspended, at rest, from one end so that it can freely oscillate in the vertical plane. A particle of mass 0.1 kg moving in a straight line with velocity $80\ \mathrm{m/s}$ hits the rod at its bottom most point and sticks to it (see figure). The angular speed (in rad/s) of the rod immediately after the collision will be .



Numerical answer: _____

Enter the requested value (an integer; 0 decimal places). Use the units and scaling stated in the question.

Correct answer: 20

Source solution

20

$L_i = L_f$

$0.1 \times 80 \times 1 = \frac{0.9 \times 1^2}{3} \times \omega + (0.1)1^2\omega$

$8 = (0.3 + 0.1)\omega$

$8 = (0.4)\omega$

$\omega = \frac{80}{4} = 20$

Question 75

A hollow sphere is rolling on a plane surface about its axis of symmetry. The ratio of rotational kinetic energy to its total kinetic energy is $\frac{x}{5}$. The value of x is .

Numerical answer: _____

Enter the requested value (an integer; 0 decimal places). Use the units and scaling stated in the question.

Correct answer: 2

Source solution

$$\frac{\frac{1}{2}I\omega^2}{\frac{1}{2}I\omega^2+\frac{1}{2}mv^2} = \frac{\left(\frac{1}{2}\right)\left(\frac{2}{3}mR^2\right)\omega^2}{\left(\frac{1}{2}\right)\left(\frac{2}{3}mR^2\right)\omega^2+\frac{1}{2}m(R\omega)^2}$$

$$= \frac{\frac{2}{3}}{\frac{2}{3}+1} = \frac{2}{5}$$

$$\mathbf{x = 2}$$

Question 76

Match List-I with List-II.

List-I	List-II
(A) Moment of inertia of solid sphere of radius R about any tangent	(I) $\frac{5}{3}MR^2$
(B) Moment of inertia of hollow sphere of radius R about any tangent	(II) $\frac{7}{5}MR^2$
(C) Moment of inertia of circular ring of radius R about its diameter	(III) $\frac{1}{4}MR^2$
(D) Moment of inertia of circular disc of radius R about any diameter	(IV) $\frac{1}{2}MR^2$

Question: Choose the correct answer from the options given below.

A. A-II, B-II, C-IV, D-III

B. A-I, B-II, C-IV, D-III

C. A-II, B-I, C-III, D-IV

D. A-I, B-II, C-III, D-IV

Correct answer: A

Source solution

(A) Solid sphere about a tangent

Using the parallel axis theorem,

$$I_{\text{tangent}} = I_{\text{diameter}} + MR^2$$

$$= \frac{2}{5}MR^2 + MR^2 = \frac{7}{5}MR^2$$

$$\therefore \quad \text{A} \rightarrow (\text{II})$$

(B) Hollow sphere about a tangent

$$I_{\text{tangent}} = I_{\text{diameter}} + MR^2 = \frac{2}{3}MR^2 + MR^2 = \frac{5}{3}MR^2$$

$$\therefore \quad \text{B} \rightarrow (\text{I})$$

(C) Circular ring about its diameter

Using the perpendicular axis theorem,

$$I_z = MR^2 = I_x + I_y$$

$$I_x = I_y = \frac{1}{2}MR^2$$

$$\therefore \quad \text{C} \rightarrow (\text{IV})$$

(D) Circular disc about any diameter

$$I_z = \frac{1}{2}MR^2 = I_x + I_y$$

$$I_x = I_y = \frac{1}{4}MR^2$$

$$\therefore \quad \mathrm{D} \rightarrow (\mathrm{III})$$

$$\boxed{A \rightarrow II, \quad B \rightarrow I, \quad C \rightarrow IV, \quad D \rightarrow III}$$

Gravitation

Questions 77-80 / 4 selected / 1.3% practice weight / Consolidate

Question 77

Given below are two statements :Statement I: For a planet, if the ratio of mass of the planet to its radius increases, the escape velocity from the planet also increases.Statement II: Escape velocity is independent of the radius of the planet.In the light of above statements, choose the most appropriate answer from the options given belowOption :}

A. Both Statement I and Statement II are incorrect

B. Statement I is correct but statement II is incorrect

C. Statement I is incorrect but statement II is correct

D. Both Statement I and Statement II are correct

Correct answer: B

Source solution

The escape velocity from the surface of a planet is

$$V_e = \sqrt{\frac{2GM}{R}}.$$

Hence,

$$V_e \propto \sqrt{\frac{M}{R}}.$$

Therefore, as the ratio

$$\frac{M}{R}$$

increases, the escape velocity increases.

Thus, Statement (1) is correct.

Also,

$$V_e \propto \frac{1}{\sqrt{R}}$$

(for a fixed mass M), showing that escape velocity depends on the radius of the planet.

Hence, Statement (2) is incorrect.

Statement (1) is correct and Statement (2) is incorrect.

Question 78

Match List-I with List-II.

List-I	List-II
(a) AM Broadcast	(i) 540–1600 kHz
(b) FM Broadcast	(ii) 88–108 MHz
(c) Television	(iii) 54–890 MHz
(d) Satellite Communication	(iv) 3.7–4.2 GHz

Choose the correct answer from the options given below:

A. A-II, B-II, C-III, D-IV

B. A-I, B-III, C-II, D-IV

C. A-IV, B-III, C-I, D-II

D. A-II, B-III, C-I, D-IV

Correct answer: A

Source solution

AM Broadcast $\rightarrow$ 540–1600 kHz

FM Broadcast $\rightarrow$ 88–108 MHz

Television $\rightarrow$ 54–890 MHz

Satellite Communication $\rightarrow$ 3.7–4.2 GHz

$$\boxed{(a) \rightarrow (i),\ (b) \rightarrow (ii),\ (c) \rightarrow (iii),\ (d) \rightarrow (iv)}$$

Question 79

Choose the incorrect statement from the following:

A. The speed of satellite in a given circular orbit remains constant.

B. For a planet revolving around the sun in an elliptical orbit, the total energy of the planet remains constant.

C. When a body fall towards earth, the displacement of earth towards the body is negligible.

D. The linear speed of a planet revolving around the sun remains constant.

Correct answer: D

Source solution

Sol. Planets revolve in elliptical paths around the Sun. Thus, their linear speed is not constant.

Question 80

A satellite is moving in a low nearly circular orbit around the earth. Its radius is roughly equal to that of the earth's radius $\mathbf{R_e}$. By firing rockets attached to it, its speed is instantaneously increased in the direction of its motion so that it become $\sqrt{\frac{3}{2}}$ times larger. Due to this the farthest distance from the centre of the earth that the satellite reaches is $\boldsymbol{R}$. Value of $\boldsymbol{R}$ is :

A. $2R_e$

B. $3R_e$

C. $4R_e$

D. $2.5\mathrm{R_e}$

Correct answer: B

Source solution

The particle is projected from the Earth's surface with speed

$$V_0 = \sqrt{\frac{3GM}{2R_e}}.$$

Since the gravitational force is central, angular momentum is conserved:

$$mV_0R_e = mVR,$$

which gives

$$V = V_0\frac{R_e}{R}.$$

Applying conservation of mechanical energy,

$$-\frac{GMm}{R_e} + \frac{1}{2}mV_0^2 = -\frac{GMm}{R} + \frac{1}{2}mV^2.$$

Substituting

$$V_0^2 = \frac{3GM}{2R_e}$$

and

$$V^2 = V_0^2 \frac{R_e^2}{R^2},$$

we get

$$-\frac{GMm}{R_e} + \frac{1}{2}m\left(\frac{3GM}{2R_e}\right) = -\frac{GMm}{R} + \frac{1}{2}m\left(\frac{3GM}{2R_e}\right)\frac{R_e^2}{R^2}.$$

Cancelling GMm,

$$-\frac{1}{R_e} + \frac{3}{4R_e} = -\frac{1}{R} + \frac{3R_e}{4R^2}.$$

Thus,

$$-\frac{1}{4R_e} = -\frac{1}{R} + \frac{3R_e}{4R^2}.$$

Multiplying by $4R_eR^2$,

$$-R^2 = -4R_eR + 3R_e^2.$$

Rearranging,

$$R^2 - 4R_eR + 3R_e^2 = 0.$$

Factoring,

$$(R - R_e)(R - 3R_e) = 0.$$

Since $R = R_e$ corresponds to the point of projection, the other turning point is

$$\boxed{R = 3R_e}.$$

Mechanical Properties of Solids

Question 81

A 3 m long wire of radius 3 mm shows an extension of 0.1 mm when loaded vertically by a mass of 50 kg in an experiment to determine Young's modulus. The value of Young's modulus of the wire as per this experiment is $\mathbf{P} \times \mathbf{10^{11}Nm^{-2}}$, where the value of P is : $\left(\text{Take } \mathbf{g = 3\pi\ m/s^2}\right)$

A. 5

B. 10

C. 25

D. 2.5

Correct answer: A

Source solution

Sol.

$$\frac{50\,g}{\pi r^2} = y \cdot \frac{\Delta \ell}{\ell}$$

$$\frac{50 \cdot 3\pi}{\pi \cdot \left(3 \times 10^{-3}\right)^2} = P \cdot 10^{11} \cdot \frac{0.1 \times 10^{-3}}{3}$$

$$\Rightarrow P = \frac{50 \cdot 3 \cdot 3}{3^2 \cdot 10^{-6} \cdot 10^{11} \cdot 0.1 \times 10^{-3}}$$

$$P = 5$$

Question 82

A uniform heavy rod of mass 20 kg . Cross sectional area $\mathbf{0.4\ m^2}$ and length 20 m is hanging from a fixed support. Neglecting the lateral contraction, the elongation in the rod due to its own weight is $\mathbf{x \times 10^{-9}\ m}$. The value of x is .

:(Given. Young's modulus $\mathbf{Y = 2 \times 10^{11} Nm^{-2}}$ and $\mathbf{g = 10\ ms^{-2}}$)

Numerical answer: _____

Enter the requested value (an integer; 0 decimal places). Use the units and scaling stated in the question.

Correct answer: 25

Source solution

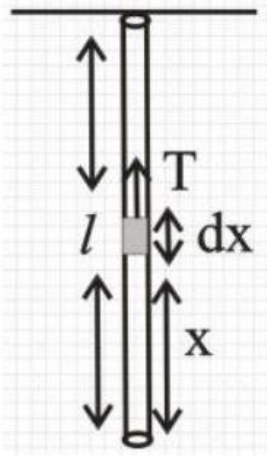

$\mathbf{Y = \frac{T}{A}\frac{dx}{dy}}$

$\mathbf{m = 20\ kg}$

$\mathbf{A = 0.4 m^2}$

$\mathbf{1 = 20\ m}$

let extension is dy in length dx

$\mathbf{Y = \frac{stress}{strain}}$

$\mathbf{Y = \frac{\frac{T}{A}}{\frac{dy}{dx}} = \frac{T}{A} \cdot \frac{dx}{dy}}$

$\mathbf{dy = \frac{Tdx}{AY}}$

Tension at a distance x from lower end $= \mathbf{\frac{mg}{\ell}x}$

So. $\mathbf{\int_0^{\Delta l} dy = \int_0^{\ell} \frac{mg}{\ell} x \frac{dx}{AY}}$

$\mathbf{\Delta \ell = \frac{mg}{\ell AY}\left[\frac{x^2}{2}\right]_0^{\ell}}$

$\mathbf{\Delta \ell = \frac{mg\ell}{2AY}}$

$\mathbf{\Delta \ell = \frac{20 \times 10 \times 20}{2 \times 0.4 \times 2 \times 10^{11}}}$

2500×10^{-11}
$\Delta \ell = 25 \times 10^{-9}$
$= \mathbf{x} \times 10^{-9}$
$\mathbf{x} = 25$

Question 83

An object of mass m is suspended at the end of a massless wire of length L and area of crosssection A. Young modulus of the material of the wire is Y. If the mass is pulled down slightly its frequency of oscillation along the vertical direction is:

A. $f = \frac{1}{2\pi}\sqrt{\frac{YA}{mL}}$

B. $f = \frac{1}{2\pi}\sqrt{\frac{\mathrm{mL}}{\mathrm{YA}}}$

C. $f = \frac{1}{2\pi}\sqrt{\frac{YL}{mA}}$

D. $f = \frac{1}{2\pi}\sqrt{\frac{mA}{YL}}$

Correct answer: A

Source solution

Young's modulus is

$$Y = \frac{F/A}{\Delta L/L}.$$

Therefore,

$$Y = \frac{FL}{A\Delta L},$$

or

$$F = \frac{YA\,\Delta L}{L}.$$

Hence, the effective spring constant of the wire is

$$k = \frac{F}{\Delta L} = \frac{YA}{L}.$$

The frequency of oscillation of a mass m attached to the wire is

$$f = \frac{1}{2\pi}\sqrt{\frac{k}{m}}.$$

Substituting

$$k = \frac{YA}{L},$$

we get

$$\boxed{f = \frac{1}{2\pi}\sqrt{\frac{YA}{Lm}}}.$$

Question 84

In a Young's double slit experiment, the intensity at a point is $\left(\frac{1}{4}\right)^{\text{th}}$ of the maximum intensity, the minimum distance of the point from the central maximum is μm.
(Given : $\lambda = 600\ \text{nm},\ \text{d} = 1.0\ \text{mm}, \text{D} = 1.0\ \text{m}$)

Numerical answer: _____

Enter the requested value (an integer; 0 decimal places). Use the units and scaling stated in the question.

Correct answer: 200

Source solution

$I = I_0 \cos^2\left(\frac{\Delta\phi}{2}\right)$
$\frac{\text{I}_0}{4} = \cos^2\left(\frac{\Delta\phi}{2}\right)$
$\Delta\phi = \frac{2\pi}{3}$
$\frac{2\pi}{\lambda}\left(\frac{\text{yd}}{\text{D}}\right) = \frac{2\pi}{3}$
$\text{y} = \frac{\lambda\text{D}}{3\,\text{d}} = \frac{600\times10^{-9}\times1}{3\times10^{-3}} = 2\times10^{-4}\ \text{m}$

Question 85

In a Young's double slit experiment, the slits are separated by 0.3 mm and the screen is 1.5 m away from the plane of slits. Distance between fourth bright fringes on both sides of central bright is 2.4 cm . The frequency of light used is $\times 10^{14}$ Hz.

Numerical answer: _____

Enter the requested value (an integer; 0 decimal places). Use the units and scaling stated in the question.

Correct answer: 5

Source solution

$$8\beta = 2.4 \text{ cm}$$
$$\frac{8\lambda\Delta}{d} = 2.4 \text{ cm}$$
$$\frac{8\times 1.5\times c}{0.3\times 10^{-3}\times f} = 2.4 \times 10^{-2}$$
$$f = 5 \times 10^{14} \text{ Hz}$$

Question 86

Match List-I with List-II.

List-I	List-II
(a) Young's Modulus (Y)	(i) $\left[\mathrm{M L^{-1} T^{-2}}\right]$
(b) Co-efficient of Viscosity (\eta)	(ii) $\left[\mathrm{M L^{-1} T^{-1}}\right]$
(c) Planck's Constant (h)	(iii) $\left[\mathrm{M L^{2} T^{-1}}\right]$
(d) Work Function (\varphi)	(iv) $\left[\mathrm{M L^{2} T^{-2}}\right]$

Choose the correct answer from the options given below:

A. A-I, B-II, C-III, D-IV

B. A-II, B-III, C-IV, D-I

C. A-I, B-III, C-IV, D-II

D. A-III, B-I, C-II, D-IV

Correct answer: D

Source solution

Young's modulus is

$$Y = \frac{\text{stress}}{\text{strain}}.$$

Since strain is dimensionless,

$$[Y] = [\text{stress}] = \frac{[F]}{[A]} = \frac{MLT^{-2}}{L^2} = ML^{-1}T^{-2}.$$

From Stokes' law,

$$F = 6\pi\eta r v.$$

Therefore,

$$[\eta] = \frac{[F]}{[r][v]} = \frac{MLT^{-2}}{L \cdot LT^{-1}} = ML^{-1}T^{-1}.$$

Planck's constant,

$$h = \frac{E}{f},$$

so

$$[h] = \frac{ML^2T^{-2}}{T^{-1}} = ML^2T^{-1}.$$

Work function ϕ is an energy:

$$[\phi] = ML^2T^{-2}.$$

Hence,

$$[Y] = ML^{-1}T^{-2}, \qquad [\eta] = ML^{-1}T^{-1}, \qquad [h] = ML^2T^{-1}, \qquad [\phi] = ML^2T^{-2}.$$

Mechanical Properties of Fluids

Questions 87-92 / 6 selected / 2.0% practice weight / Consolidate

Question 87

The surface tension of soap solution is $3.5 \times 10^{-2}\ \mathrm{Nm}^{-1}$. The amount of work done required to increase the radius of soap bubble from 10 cm to 20 cm is $\quad\quad \times 10^{-4}\ \mathrm{J}$.

Numerical answer: _____

Enter the requested value (an integer; 0 decimal places). Use the units and scaling stated in the question.

Correct answer: 264

Source solution

$$\mathrm{W} = \mathrm{T}.(\Delta \mathrm{A})$$
$$\mathrm{W} = \mathrm{T}\left(8\pi\left(\mathrm{r}_2^2 - \mathrm{r}_1^2\right)\right)$$
$$\mathrm{W} = 264 \times 10^{-4}\ \mathrm{J}$$

Question 88

Match List-I with List-II.

List-I	List-II
(A) Coefficient of viscosity	(IV) $[\mathrm{M L^{-1} T^{-1}}]$
(B) Intensity of wave	(II) $[\mathrm{M L^{-2} T^{-2}}]$
(C) Pressure gradient	(I) $[\mathrm{M L^{0} T^{-3}}]$
(D) Compressibility	(III) $[\mathrm{M^{-1} L T^{2}}]$

Choose the correct answer from the options given below:

A. (A)-(I), (B)-(IV), (C)-(III), (D)-(II)

B. (A)-(IV), (B)-(I), (C)-(II), (D)-(III)

C. (A)-(IV), (B)-(II), (C)-(I), (D)-(III)

D. (A)-(II), (B)-(III), (C)-(IV), (D)-(I)

Correct answer: B

Source solution

Sol. (A) Coefficient of viscosity

$$[\eta] = [\mathrm{M^1 L^{-1} T^{-1}}]$$

(B) Intensity

$$[I] = [\mathrm{M^1 L^0 T^{-3}}]$$

(C) Pressure gradient

$$[P] = [\mathrm{M L^{-2} T^{-2}}]$$

(D) Compressibility

$$[K] = [\mathrm{M^{-1} L^1 T^2}]$$

Question 89

Match List-I with List-II.

List-I	List-II
(A) Coefficient of viscosity	(III) $[\mathrm{M L^{-1} T^{-1}}]$
(B) Surface tension	(IV) $[\mathrm{M L^{0} T^{-2}}]$
(C) Angular momentum	(II) $[\mathrm{M L^{2} T^{-1}}]$
(D) Rotational kinetic energy	(I) $[\mathrm{M L^{2} T^{-2}}]$

Choose the correct answer from the options given below:

A. A-II, B-I, C-IV, D-III

B. A-I, B-II, C-III, D-IV

C. A-III, B-IV, C-II, D-I

D. A-IV, B-III, C-II, D-I

Correct answer: C

Source solution

(A) Coefficient of viscosity

The dimensional formula of coefficient of viscosity is

$$[\eta] = ML^{-1}T^{-1}.$$

$$\boxed{(A) \to (III)}$$

\vspace{0.2cm}

(B) Surface tension

$$\text{Surface tension} = \frac{\text{Force}}{\text{Length}}$$

$$= \frac{MLT^{-2}}{L} = ML^0T^{-2}.$$

$$\boxed{(B) \to (IV)}$$

\vspace{0.2cm}

(C) Angular momentum

$$L = I\omega$$

$$[L] = (ML^2)(T^{-1}) = ML^2T^{-1}.$$

$$\boxed{(C) \to (II)}$$

\vspace{0.2cm}

(D) Rotational kinetic energy

$$K = \frac{1}{2}I\omega^2.$$

$$[K] = (ML^2)(T^{-2}) = ML^2T^{-2}.$$

$$\boxed{(D) \rightarrow (I)}$$

Therefore,

$$\boxed{(A) \rightarrow (III), \quad (B) \rightarrow (IV), \quad (C) \rightarrow (II), \quad (D) \rightarrow (I)}$$

Question 90

Match List-I with List-II.

List-I	List-II
(a) Surface tension	(i) $\mathrm{kg\,m^{-1}\,s^{-2}}$
(b) Pressure	(ii) $\mathrm{kg\,m^{-1}\,s^{-2}}$
(c) Viscosity	(iii) $\mathrm{kg\,m^{-1}\,s^{-1}}$
(d) Impulse	(iv) $\mathrm{kg\,m\,s^{-1}}$

Choose the correct answer from the options given below:

A. A-II, B-I, C-III, D-IV

B. A-IV, B-III, C-I, D-II

C. A-III, B-IV, C-I, D-II

D. A-IV, B-III, C-II, D-I

Correct answer: B

Source solution

Surface Tension (S)

$$S = \frac{F}{l}$$

$$[S] = \frac{MLT^{-2}}{L} = MT^{-2}$$

$$\boxed{[S] = MT^{-2}}$$

Impulse (J)

$$J = \int F\,dt$$

$$[J] = (MLT^{-2})(T) = MLT^{-1}$$

$$\boxed{[J] = MLT^{-1}}$$

Pressure (P)

$$P = \frac{F}{A}$$

$$[P] = \frac{MLT^{-2}}{L^2} = ML^{-1}T^{-2}$$

$$\boxed{[P] = ML^{-1}T^{-2}}$$

Coefficient of Viscosity,

Using Stokes' law,

$$F = 6\pi\eta r v$$

$$[\eta] = \frac{[F]}{[r][v]} = \frac{MLT^{-2}}{L\,(LT^{-1})} = ML^{-1}T^{-1}$$

$$\boxed{[\eta] = ML^{-1}T^{-1}}$$

Thus,

$$\boxed{[S] = MT^{-2}, \quad [J] = MLT^{-1}, \quad [P] = ML^{-1}T^{-2}, \quad [\eta] = ML^{-1}T^{-1}}$$

Question 91

Match List-I with List-II.

List-I	List-II
(a) Torque	(i) ML^2T^{-2}
(b) Stress	(ii) $ML^{-1}T^{-2}$
(c) Pressure gradient	(iii) $ML^{-2}T^{-2}$
(d) Coefficient of viscosity	(iv) $ML^{-1}T^{-1}$

Choose the correct answer from the options given below:

A. A-III, B-IV, C-I, D-II

B. A-IV, B-II, C-III, D-I

C. A-II, B-IV, C-I, D-III

D. A-II, B-I, C-IV, D-III

Correct answer: C

Source solution

(a) Torque

$$\tau = r \times F$$

$$[\tau] = [L]\,[MLT^{-2}] = ML^2T^{-2}$$

$$\boxed{(a) \rightarrow (i)}$$

(b) Stress

$$\text{Stress} = \frac{\text{Force}}{\text{Area}}$$

$$[\text{Stress}] = \frac{MLT^{-2}}{L^2} = ML^{-1}T^{-2}$$

$$\boxed{(b) \to (ii)}$$

(c) Pressure Gradient

$$\frac{dP}{dx}$$

Since

$$[P] = \frac{MLT^{-2}}{L^2} = ML^{-1}T^{-2},$$

$$\left[\frac{dP}{dx}\right] = \frac{ML^{-1}T^{-2}}{L} = ML^{-2}T^{-2}$$

$$\boxed{(c) \to (iii)}$$

(d) Coefficient of Viscosity

Using

$$F = \eta A \frac{dv}{dx},$$

$$[\eta] = \frac{[F]}{[A]\,[dv/dx]} = \frac{MLT^{-2}}{L^2\,T^{-1}} = ML^{-1}T^{-1}$$

$$\boxed{(d) \rightarrow (iv)}$$

Therefore,

$$\boxed{(a) \rightarrow (i), \quad (b) \rightarrow (ii), \quad (c) \rightarrow (iii), \quad (d) \rightarrow (iv)}$$

Question 92

Match List-I with List-II.

List-I	List-II
(a) R_H (Rydberg constant)	(i) m^{-1}
(b) h (Planck's constant)	(ii) $\mathrm{kg\,m^2\,s^{-1}}$
(c) μ_B (Magnetic field energy density)	(iii) $\mathrm{kg\,m^{-1}\,s^{-2}}$
(d) η (Coefficient of viscosity)	(iv) $\mathrm{kg\,m^{-1}\,s^{-1}}$

Choose the most appropriate answer from the options given below:

A. (a)-(ii), (b)-(iii), (c)-(iv), (d)-(i)

B. (a)-(iii), (b)-(ii), (c)-(iv), (d)-(i)

C. (a)-(iv), (b)-(ii), (c)-(i), (d)-(iii)

D. (a)-(iii), (b)-(ii), (c)-(i), (d)-(iv)

Correct answer: B

Source solution

(a) R_H (Rydberg constant)

From

$$\frac{1}{\lambda} = R_H\left(\frac{1}{n_1^2} - \frac{1}{n_2^2}\right),$$

$$[R_H] = L^{-1} = \mathrm{m}^{-1}.$$

$$\boxed{(a) \to (i)}$$

\vspace{0.2cm}

(b) h (Planck's constant)

Using

$$E = h\nu,$$

$$[h] = \frac{ML^2T^{-2}}{T^{-1}} = ML^2T^{-1}.$$

$$\boxed{(b) \to (ii)}$$

\vspace{0.2cm}

(c) μ_B (Magnetic field energy density)

Energy density has dimensions

$$\frac{\text{Energy}}{\text{Volume}} = \frac{ML^2T^{-2}}{L^3} = ML^{-1}T^{-2}.$$

$$\boxed{(c) \to (iii)}$$

\vspace{0.2cm}

(d) η (Coefficient of viscosity)

Using

$$F = \eta A \frac{dv}{dx},$$

$$[\eta] = ML^{-1}T^{-1}.$$

$$\boxed{(d) \to (iv)}$$

Therefore,

$$\boxed{(a) \to (i), \quad (b) \to (ii), \quad (c) \to (iii), \quad (d) \to (iv)}$$

Thermal Properties of Matter

Questions 93-97 / 5 selected / 1.7% practice weight / Consolidate

Question 93

The pressure (P) and temperature (T) relationship of an ideal gas obeys the equation $\mathbf{PT^2} = \text{constant}$. The volume expansion coefficient of the gas will be :

A. $\frac{3}{\mathbf{T^3}}$

B. $\frac{3}{\mathbf{T^2}}$

C. $\mathbf{3\,T^2}$

D. $\frac{3}{\mathbf{T}}$

Correct answer: D

Source solution

$$PT^2 = \text{constant}$$

$$\gamma = \frac{1}{V}\frac{dV}{dT}$$

$$PV = nRT$$

$$P = \frac{nRT}{V}$$

$$\frac{nRT}{V} \cdot T^2 = \text{constant}$$

$$\frac{nRT^3}{V} = \text{constant}$$

$$V \propto T^3$$

$$V = KT^3$$

$$\frac{dV}{dT} = 3KT^2$$

$$\gamma = \frac{1}{KT^3} \cdot 3KT^2$$

$$\boxed{\gamma = \frac{3}{T}}$$

Question 94

A bicycle tyre is filled with air having pressure of 270 kPa at $27^\circ\mathrm{C}$. The approximate pressure of the air in the tyre when the temperature increases to $36^\circ\mathrm{C}$ is

A. 270 kPa

B. 262 kPa

C. 360 kPa

D. 278 kPa

Correct answer: D

Source solution

$$PV = nRT$$

$$n = \text{constant}, \qquad V = \text{constant}$$

$$P \propto T$$

$$P_1 = 270\,\mathrm{kPa}$$

$$T_1 = 27^\circ\mathrm{C} = 300\,\mathrm{K}$$

$$P_2 = ?$$

$$T_2 = 36^\circ\mathrm{C} = 309\,\mathrm{K}$$

$$\frac{P_2}{P_1} = \frac{T_2}{T_1}$$

$$\frac{P_2}{270} = \frac{309}{300}$$

$$P_2 = \frac{309}{300} \times 270$$

$$P_2 = 278.1\,\text{kPa}$$

$$P_2 \approx 278\,\text{kPa}$$

$$\boxed{278\,\text{kPa}}$$

Question 95

Match List-I with List-II.

List-I	List-II
(a) Troposphere	(i) Approximate 10 km over Earth's surface
(b) E-Part of Stratosphere	(ii) Approximate 65–75 km over Earth's surface
(c) F2-Part of Thermosphere	(iii) Approximate 300 km over Earth's surface
(d) D-Part of Stratosphere	(iv) Approximate 100 km over Earth's surface

Choose the correct answer from the options given below:

A. A-III, B-IV, C-II, D-I

B. A-III, B-II, C-I, D-IV

C. A-I, B-IV, C-III, D-II

D. A-I, B-II, C-IV, D-III

Correct answer: A

Source solution

Known approximate heights of atmospheric and ionospheric layers:

$$\text{Troposphere} \rightarrow 10\,\text{km}$$

$$\text{D-layer} \rightarrow 65\text{--}75\,\text{km}$$

$$\text{E-layer} \rightarrow 100\,\text{km}$$

$$\text{F}_2\text{-layer} \rightarrow 300\,\text{km}$$

$$\boxed{(a) \to (i),\ (b) \to (iv),\ (c) \to (iii),\ (d) \to (ii)}$$

Question 96

When M_1 gram of ice at $-10^\circ\mathrm{C}$ (specific heat $= 0.5\mathrm{cal g^{-1}{}^\circ C^{-1}}$) is added to $\mathrm{M_2}$ gram of water at $50^\circ\mathrm{C}$, finally no ice is left and the water is at $0^\circ\mathrm{C}$. The value of latent heat of ice, in cal $\mathrm{g^{-1}}$ is :

A. $\frac{50M_2}{M_1} - 5$

B. $\frac{5M_1}{M_2} - 50$

C. $\frac{50M_2}{M_1}$

D. $\frac{5M_2}{M_1} - 5$

Correct answer: A

Source solution

$$M_1 \cdot 5 + M_1 L = M_2 \cdot 50$$

$$M_1(5 + L) = 50M_2$$

$$5 + L = \frac{50M_2}{M_1}$$

$$\boxed{L = \frac{50M_2}{M_1} - 5}$$

Question 97

The specific heat of water $= 4200\ \mathrm{J\ kg^{-1}\ K^{-1}}$ and the latent heat of ice $= 3.4 \times 10^5\ \mathrm{J\ kg^{-1}}$.$100$ grams of ice at $0^\circ\mathrm{C}$ is placed in 200 g of water at $25^\circ\mathrm{C}$. The amount of ice that will melt as the temperature of water reaches $0^\circ\mathrm{C}$ is close to (in grams):

A. 63.8

B. 64.6

C. 61.7

D. 69.3

Correct answer: C

Source solution

$$Q = m_w s \Delta\theta$$

$$Q = \left(\frac{200}{1000}\right)(4200)(25)$$

$$Q = 21000\,\mathrm{J}$$

$$\Delta m_i L = 21000$$

$$\Delta m_i = \frac{21000}{3.4 \times 10^5}$$

$$\Delta m_i = 0.0617\,\mathrm{kg}$$

$$\Delta m_i = 0.0617 \times 10^3\,\mathrm{g}$$

$$\boxed{\Delta m_i = 61.7\,\mathrm{g}}$$

Thermodynamics

Question 98

The amount of heat needed to raise the temperature of 4 moles of a rigid diatomic gas from 0°C to 50°C when no work is done is ___. (R is the universal gas constant)

A. 250 R

B. 750 R

C. 175 R

D. 500 R

Correct answer: D

Source solution

$$\Delta Q = \Delta U + \Delta W$$
$$\text{Here } \Delta W = 0$$
$$\Delta Q = \Delta U = \mathrm{nC_V}\Delta T$$
$$\Delta Q = 4 \times \frac{5R}{2}(50) = 500\mathrm{R}$$

Hence option (4)

Question 99

1 g of a liquid is converted to vapour at $3 \times 10^5\ \text{Pa}$ pressure. If 10% of the heat supplied is used for increasing the volume by $1600\ \text{cm}^3$ during this phase change, then the increase in internal energy in the process will be:

A. 432000 J

B. 4320 J

C. 4800 J

D. $4.32 \times 10^8\ \text{J}$

Correct answer: B

Source solution

10% of $\Delta Q = P\Delta V$ (W/D by gas)

$$\frac{\Delta Q}{10} = 3 \times 10^5 \left(1600 \times 10^{-6}\right)$$

$\Delta Q = 4800\,\text{J}$

Using the first law of thermodynamics:
$\Delta Q = \Delta u + W$

$$\Delta Q = \Delta u + \frac{\Delta Q}{10} \Rightarrow \Delta u = \frac{9}{10}\Delta Q$$

$$\Delta u = \frac{9}{10} \times 4800 \Rightarrow \Delta u = 4320\,\text{J}$$

Question 100

Heat is given to an ideal gas in an isothermal process.A. Internal energy of the gas will decrease.B. Internal energy of the gas will increase.C. Internal energy of the gas will not change.D. The gas will do positive work.E. The gas will do negative work.Choose the correct answer from the options given below :

A. C and D only

B. C and E only

C. A and E only

D. B and D only

Correct answer: A

Source solution

Sol. (1) In an isothermal process

$$\text{So} \begin{matrix} \Delta T = 0 \\ \Delta U = 0 \\ \Delta Q = W + \Delta U \\ \Delta Q = W \end{matrix}$$

So heat will be used to do positive work.

Question 101

The pressure of a gas changes linearly with volume from A to B as shown in figure. If no heat is supplied to or extracted from the gas then change in the internal energy of the gas will be

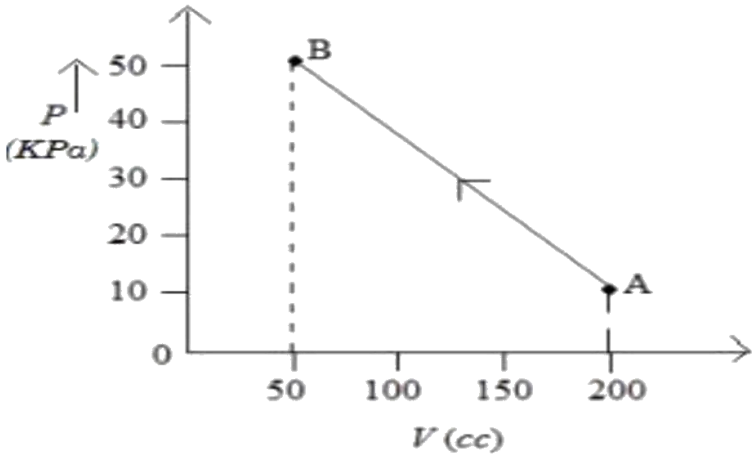

A. -4.5 J

B. zero

C. 4.5 J

D. 6 J

Correct answer: C

Source solution

$$W = \text{Area of } PV \text{ Graph} = -\tfrac{1}{2} \times [50 + 10] \times 10^3 \times 150 \times 10^{-6}$$

$$W = -4.5\,\text{J}$$

$$Q = \Delta U + W$$

$$0 = \Delta U - 4.5$$

$$\Delta U = 4.5\,\text{J}$$

Question 102

1 kg of water at $100^\circ\mathrm{C}$ is converted into steam at $100^\circ\mathrm{C}$ by boiling at atmospheric pressure. The volume of water changes from $1.00 \times 10^{-3}\ \mathrm{m}^3$ as a liquid to $1.671\ \mathrm{m}^3$ as steam. The change in internal energy of the system during the process will be (Given latent heat of vaporisaiton $= 2257\ \mathrm{kJ/kg}$. Atmospheric pressure $= 1 \times 10^5\ \mathrm{Pa}$)

A. +2090 kJ

B. -2090 kJ

C. - 2426 kJ

D. +2476 kJ

Correct answer: A

Source solution

$$\Delta Q = \Delta U + \Delta W$$

Hence,

$$\Delta U = \Delta Q - \Delta W.$$

The heat supplied is

$$\Delta Q = mL_v,$$

and the work done against atmospheric pressure is

$$\Delta W = P\,\Delta V.$$

Therefore,

$$\Delta U = mL_v - P\Delta V.$$

Substituting the given values,

$$\Delta U = (1\,\mathrm{kg})\left(2257 \times 10^{3}\,\mathrm{J\,kg^{-1}}\right) - \left(1 \times 10^{5}\,\mathrm{Pa}\right)\left(1.671\,\mathrm{m^{3}} - 10^{-3}\,\mathrm{m^{3}}\right).$$

$$\Delta U = 2257 \times 10^{3} - (10^{5})(1.670).$$

$$\Delta U = 2257 \times 10^{3} - 167 \times 10^{3}.$$

$$\Delta U = 2090 \times 10^{3}\,\mathrm{J}.$$

Hence,

$$\boxed{\Delta U = 2090\,\mathrm{kJ}}.$$

Question 103

Match List-I with List-II.

List-I	List-II
(a) Isothermal	(i) Pressure constant
(b) Isochoric	(ii) Temperature constant
(c) Adiabatic	(iii) Volume constant
(d) Isobaric	(iv) Heat content is constant

Choose the correct answer from the options given below:

A. (a) - (ii), (b) - (iv), (c) - (iii), (d) - (i)

B. (a) - (ii), (b) - (iii), (c) - (iv), (d) - (i)

C. (a) - (i), (b) - (iii), (c) - (ii), (d) - (iv)

D. (a) - (iii), (b) - (ii), (c) - (i), (d) - (iv)

Correct answer: B

Source solution

The meanings of the thermodynamic processes are:

$$\begin{aligned}\text{Isothermal} &\Rightarrow \text{Temperature remains constant,}\\ \text{Isochoric} &\Rightarrow \text{Volume remains constant,}\\ \text{Adiabatic} &\Rightarrow \text{No heat is exchanged with the surroundings,}\\ \text{Isobaric} &\Rightarrow \text{Pressure remains constant.}\end{aligned}$$

Therefore, the correct matching is

$$\begin{aligned}\text{(a) Isothermal} &\longrightarrow \text{(ii) Temperature constant,}\\ \text{(b) Isochoric} &\longrightarrow \text{(iii) Volume constant,}\\ \text{(c) Adiabatic} &\longrightarrow \text{(iv) No heat exchange,}\\ \text{(d) Isobaric} &\longrightarrow \text{(i) Pressure constant.}\end{aligned}$$

Hence,

$$\boxed{(a) \to (ii), \quad (b) \to (iii), \quad (c) \to (iv), \quad (d) \to (i)}$$

Question 104

Match List-I with List-II.

List-I	List-II
(A) Pressure varies inversely with volume of an ideal gas	(III) Isothermal process
(B) Heat absorbed goes partly to increase internal energy and partly to do work	(IV) Isobaric process
(C) Heat is neither absorbed nor released by a system	(I) Adiabatic process
(D) No work is done on or by a gas	(II) Isochoric process

Choose the correct answer from the options given below:

A. A-I, B-IV, C-II, D-III

B. A-III, B-I, C-IV, D-II

C. A-I, B-III, C-II, D-IV

D. A-III, B-IV, C-I, D-II

Correct answer: D

Source solution

\textbf{(A) Pressure varies inversely with volume of an ideal gas}

For an ideal gas undergoing an isothermal process,

$$PV = \text{constant}.$$

Hence,

$$P \propto \frac{1}{V}.$$

Therefore,

$$(A) \rightarrow (III).$$

\textbf{(B) Heat absorbed goes partly to increase internal energy and partly to do work}

In an isobaric process,

$$\Delta Q = \Delta U + P\Delta V.$$

Thus, the heat supplied is used partly to increase internal energy and partly to perform work.

$$(B) \to (IV).$$

\textbf{(C) Heat is neither absorbed nor released by a system}

For an adiabatic process,

$$\Delta Q = 0.$$

Hence,

$$(C) \to (I).$$

\textbf{(D) No work is done on or by a gas}

For an isochoric process,

$$\Delta V = 0.$$

Therefore,

$$W = \int P\,dV = 0.$$

Hence,

$$(D) \rightarrow (II).$$

Thus, the correct matching is

$$\boxed{A \rightarrow III, \quad B \rightarrow IV, \quad C \rightarrow I, \quad D \rightarrow II}$$

Question 105

Match List-I with List-II.

List-I	List-II
(A) Isothermal	(IV) $\Delta U = 0$
(B) Adiabatic	(II) $\Delta Q = 0$
(C) Isobaric	(III) $\Delta U \neq 0$
(D) Isochoric	(I) $\Delta W = 0$

Choose the correct answer from the options given below:

A. (A)-(III), (B)-(II), (C)-(I), (D)-(IV)

B. (A)-(IV), (B)-(I), (C)-(III), (D)-(II)

C. (A)-(IV), (B)-(II), (C)-(III), (D)-(I)

D. (A)-(II), (B)-(IV), (C)-(I), (D)-(III)

Correct answer: C

Source solution

\textbf{(A) Isothermal Process}

For an ideal gas undergoing an isothermal process,

$$\Delta T = 0.$$

Since internal energy depends only on temperature,

$$\Delta U = 0.$$

Hence,

$$(A) \rightarrow (IV).$$

\textbf{(B) Adiabatic Process}

For an adiabatic process,

$$\Delta Q = 0.$$

Hence,

$$(B) \rightarrow (II).$$

\textbf{(C) Isobaric Process}

For an isobaric process,

$$P = \text{constant}.$$

In general, the temperature changes, therefore

$$\Delta U = nC_V \Delta T \neq 0.$$

Hence,

$$(C) \rightarrow (III).$$

\textbf{(D) Isochoric Process}

For an isochoric process,

$$\Delta V = 0.$$

Therefore,

$$\Delta W = \int P\,dV = 0.$$

Hence,

$$(D) \rightarrow (I).$$

Thus, the correct matching is

$$\boxed{A \rightarrow IV, \quad B \rightarrow II, \quad C \rightarrow III, \quad D \rightarrow I}$$

Kinetic Theory

Questions 106-117 / 12 selected / 4.0% practice weight / Focus first

Question 106

Two gases Ar (40) and Xe (131) at equal temperature have the same number density. Their diameters are 0.07 nm and 0.10 nm respectively. Find the ratio of their mean free time

A. 1.03

B. 2.04

C. 2.09

D. 2.49

Correct answer: A

Source solution

$$\lambda = \frac{1}{\sqrt{2}\, n\pi d^2}$$

$$t = \frac{\lambda}{\bar{v}}$$

$$\frac{t_{\text{Ar}}}{t_{\text{Xe}}} = \frac{\lambda_{\text{Ar}}}{\lambda_{\text{Xe}}} \cdot \frac{\bar{v}_{\text{Xe}}}{\bar{v}_{\text{Ar}}}$$

$$= \frac{d_{\text{Xe}}^2}{d_{\text{Ar}}^2} \sqrt{\frac{M_{\text{Ar}}}{M_{\text{Xe}}}}$$

$$= \left(\frac{0.10}{0.07}\right)^2 \sqrt{\frac{40}{131}}$$

$$\approx 1.03$$

$$\boxed{\frac{t_{\mathrm{Ar}}}{t_{\mathrm{Xe}}} \approx 1.03}$$

Question 107

A gas mixture consists of 8 moles of argon and 6 moles of oxygen at temperature T. Neglecting all vibrational modes, the total internal energy of the system is

A. 29 RT

B. 20 RT

C. 27 RT

D. 21 RT

Correct answer: C

Source solution

$$U = nC_VT$$

For the mixture,

$$U = n_1C_{V_1}T + n_2C_{V_2}T$$

$$= 8\left(\frac{3R}{2}\right)T + 6\left(\frac{5R}{2}\right)T$$

$$= \frac{24RT}{2} + \frac{30RT}{2}$$

$$= 12RT + 15RT$$

$$= 27RT$$

$$\boxed{U = 27RT}$$

Question 108

The average translational kinetic energy of $\mathbf{N_2}$ gas molecules at ___ °C becomes equal to the K.E. of an electron accelerated from rest through a potential difference of 0.1 volt. (Given $\mathbf{k_B = 1.38 \times 10^{-23}\ J/K}$) (Fill the nearest integer).

Numerical answer: _____

Enter the requested integer (0 decimal places).

Correct answer: 500

Source solution

Given Translation K.E. of $\mathbf{N_2}$ = K.E. of electron

$$\frac{3}{2}\mathbf{kT} = \mathbf{eV}$$
$$\frac{3}{2} \times 1.38 \times 10^{-23}\ \mathbf{T} = 1.6 \times 10^{-19} \times 0.1$$
$$\Rightarrow\ \mathbf{T} = 773\mathbf{k}$$
$$\mathbf{T} = 773 - 273 = 500^{\circ}\mathbf{C}$$

Question 109

Given below are two statements :Statement I : The temperature of a gas is $-73^{\circ}\mathrm{C}$. When the gas is heated to $527^{\circ}\mathrm{C}$, the root mean square speed of the molecules is doubled.Statement II : The product of pressure and volume of an ideal gas will be equal to translational kinetic energy of the molecules.In the light of the above statements, choose the correct answer from the options given below:

A. Statement I is false but Statement II is true

B. Both Statement I and Statement II are false

C. Statement I is true but Statement II is false

D. Both Statement I and Statement II are true

Correct answer: C

Source solution

Statement-1

$$v_{\text{rms}} \propto \sqrt{T}$$

$$v_{\text{rms}_1} \propto \sqrt{273-73} = \sqrt{200}$$

$$v_{\text{rms}_2} \propto \sqrt{273+527} = \sqrt{800}$$

$$\frac{v_{\text{rms}_1}}{v_{\text{rms}_2}} = \sqrt{\frac{200}{800}} = \frac{1}{2}$$

$$\therefore \quad v_{\text{rms}_2} = 2v_{\text{rms}_1}$$

$$\boxed{\text{Statement-1 is True}}$$

Statement-2

$$\text{Translational K.E.} = \frac{3}{2}NkT = \frac{3}{2}nRT = \frac{3}{2}PV$$

Statement-2 is also True

Both Statement-1 and Statement-2 are True

Question 110

The average kinetic energy of a molecule of the gas is

A. proportional to absolute temperature

B. proportional to pressure

C. proportional to volume

D. dependent on the nature of the gas

Correct answer: A

Source solution

(A) The average kinetic energy of a gas molecule is given by

$$\mathrm{K.E._{avg}} = \frac{3}{2}kT$$

$$\therefore\ \mathrm{K.E._{avg}} \propto T$$

Hence, the average kinetic energy of gas molecules depends only on the absolute temperature.

$$\boxed{\mathrm{K.E._{avg}} = \frac{3}{2}kT}$$

Question 111

Heat energy of 735 J is given to a diatomic gas allowing the gas to expand at constant pressure. Each gas molecule rotates around an internal axis but do not oscillate. The increase in the internal energy of the gas will be :

A. 525 J

B. 441 J

C. 572 J

D. 735 J

Correct answer: A

Source solution

Sol.

At constant pressure,

$$Q = nC_p\Delta T$$

Given,

$$Q = 735\,\text{J}$$

Also,

$$\Delta U = nC_v\Delta T$$

Therefore,

$$\frac{Q}{\Delta U} = \frac{C_p}{C_v} = \gamma$$

$$\Delta U = \frac{Q}{\gamma}$$

For a diatomic gas,

$$\gamma = \frac{7}{5}$$

Hence,

$$\Delta U = \frac{735}{\frac{7}{5}}$$

$$= 735 \times \frac{5}{7}$$

$$= 525\,\text{J}$$

$$\boxed{\Delta U = 525\,\text{J}}$$

Question 112

(A flask contains Hydrogen and Argon in the ratio $\mathbf{2:1}$ by mass. The temperature of the mixture is $\mathbf{30^{\circ}C}$. The ratio of average kinetic energy per molecule of the two gases (K argon $/\mathbf{K}$ hydrogen) is: (Given: Atomic Weight of $\mathbf{Ar = 39.9}$)

A. 1

B. 2

C. $\frac{39.9}{2}$

D. 39.9

Correct answer: A

Source solution

$$\text{Average kinetic energy per molecule} = \frac{3}{2}kT$$

Since average kinetic energy depends only on temperature,

$$K_{\text{Ar}} = K_{\text{H}_2}$$

Therefore,

$$\frac{K_{\text{Ar}}}{K_{\text{H}_2}} = 1$$

Question 113

The temperature at which the kinetic energy of oxygen molecules becomes double than its value at $27^\circ\mathrm{C}$ is

A. $1227^\circ\mathrm{C}$

B. $927^\circ\mathrm{C}$

C. $327^\circ\mathrm{C}$

D. $627^\circ\mathrm{C}$

Correct answer: C

Source solution

$$\text{Kinetic Energy} = \frac{f}{2}kT$$

$$\therefore \quad K \propto T$$

Let K_1 be the kinetic energy at

$$T_1 = 27^\circ\mathrm{C} = 300\,\mathrm{K}$$

and K_2 be the kinetic energy at temperature T.

Given,

$$K_2 = 2K_1$$

Therefore,

$$\frac{K_1}{K_2} = \frac{T_1}{T}$$

$$\frac{1}{2} = \frac{300}{T}$$

$$T = 600\,\mathrm{K}$$

Converting into Celsius,

$$t = 600 - 273$$

$$t = 327^{\circ}\mathrm{C}$$

Question 114

The rms speed of oxygen molecule in a vessel at particular temperature is $\left(1+\frac{5}{x}\right)^{\frac{1}{2}} v$, where v is the average speed of the molecule. The value of x will be:(Take $\pi=\frac{22}{7}$)

A. 28

B. 27

C. 8

D. 4

Correct answer: A

Source solution

$$v_{\mathrm{rms}}=\sqrt{\frac{3RT}{M}}$$

$$v_{\mathrm{avg}}=\sqrt{\frac{8RT}{\pi M}}$$

Given,

$$v_{\mathrm{rms}}=\left(1+\frac{5}{x}\right)^{1/2} v_{\mathrm{avg}}$$

Therefore,

$$\sqrt{\frac{3RT}{M}}=\left(1+\frac{5}{x}\right)^{1/2}\sqrt{\frac{8RT}{\pi M}}$$

Squaring both sides,

$$\frac{3RT}{M}=\left(1+\frac{5}{x}\right)\frac{8RT}{\pi M}$$

$$\frac{3\pi}{8} = 1 + \frac{5}{x}$$

Using

$$\pi = \frac{22}{7},$$

$$1 + \frac{5}{x} = \frac{3 \times 22}{8 \times 7} = \frac{33}{28}$$

$$\frac{5}{x} = \frac{33}{28} - 1 = \frac{5}{28}$$

$$\boxed{x = 28}$$

Question 115

If the r.m.s. speed of chlorine molecule is $490\ \mathrm{m/s}$ at $27^\circ\mathrm{C}$, the r.m.s. speed of argon molecules at the same temperature will be (Atomic mass of argon $= 39.9\mathrm{u}$, molecular mass of chlorine $= 70.9\mathrm{u}$)

A. $751.7\ \mathrm{m/s}$

B. $451.7\ \mathrm{m/s}$

C. $651.7\ \mathrm{m/s}$

D. $551.7\ \mathrm{m/s}$

Correct answer: C

Source solution

$$v_{\text{rms}} = \sqrt{\frac{3RT}{M}}$$

At the same temperature,

$$v_{\text{rms}} \propto \frac{1}{\sqrt{M}}$$

Therefore,

$$\frac{v_{\text{Ar}}}{v_{\text{Cl}_2}} = \sqrt{\frac{M_{\text{Cl}_2}}{M_{\text{Ar}}}}$$

$$= \sqrt{\frac{71}{40}}$$

$$\approx 1.33$$

Given,

$$v_{Cl_2} = 490\ \mathrm{m\,s^{-1}}$$

Hence,

$$v_{Ar} = 1.33 \times 490$$

$$= 651.7\ \mathrm{m\,s^{-1}}$$

$$\boxed{v_{Ar} \approx 6.52 \times 10^2\ \mathrm{m\,s^{-1}}}$$

Question 116

The number of air molecules per $\mathbf{cm}^3$ increased from 3×10^{19} to 12×10^{19}. The ratio of collision frequency of air molecules before and after the increase in number respectively is

A. 1.25

B. 0.25

C. 0.75

D. 0.50

Correct answer: B

Source solution

$$f = \frac{\bar{v}}{\lambda}$$

$$= \bar{v}\left(\sqrt{2}\,\pi d^2 n_v\right)$$

$$= \sqrt{2}\,\pi d^2\,\bar{v}\,n_v$$

$$\therefore \quad f \propto n_v$$

where n_v is the number density.

$$\frac{f_1}{f_2} = \frac{n_{v_1}}{n_{v_2}} = \frac{3 \times 10^{19}}{12 \times 10^{19}}$$

$$= \frac{1}{4}$$

$$= 0.25$$

$$\boxed{\frac{f_1}{f_2} = 0.25}$$

Question 117

A cup of coffee cools from $90^\circ C$ to $80^\circ C$ in t minutes when the room temperature is $20^\circ C$. The time taken by the similar cup of coffee to cool from $80^\circ C$ to $60^\circ C$ at the same room temperature is :

A. $\frac{13}{5}t$

B. $\frac{10}{13}t$

C. $\frac{13}{10}t$

D. $\frac{5}{13}t$

Correct answer: A

Source solution

Sol. By using the average form of Newton's law of cooling

$$\frac{90-80}{t}=k\left(\frac{90+80}{2}-20\right) \quad \text{(i)}$$

$$\frac{80-60}{t'}=k\left(\frac{80+60}{2}-20\right) \quad \text{(ii)}$$

Dividing (i) by (ii):

$$\frac{10\cdot t'}{t\cdot 20}=\frac{65}{50}$$

Thus,

$$t'=\frac{65}{50}\cdot 2t=\frac{65}{25}t=\frac{13}{5}t$$

Oscillations

Question 118

A rod of mass ' M ' and length ' 2 L ' is suspended at its middle by a wire. It exhibits torsional oscillations; If two masses each of ' m ' are attached at distance ' $\mathbf{L/2}$ ' from its centre on both sides, it reduces the oscillation frequency by $\mathbf{20\%}$. The value of ratio $\mathbf{m/M}$ is close to :

A. 0.17

B. 0.37

C. 0.57

D. 0.77

Correct answer: B

Source solution

Sol. Frequency of torsional oscillations is given by

$$f = \frac{k}{\sqrt{I}}$$

$$f_1 = \frac{k}{\sqrt{\frac{M(2L)^2}{12}}}$$

$$f_2 = \frac{k}{\sqrt{\frac{M(2L)^2}{12} + 2m\left(\frac{L}{2}\right)^2}}$$

$$f_2 = 0.8 f_1$$

$$\frac{m}{M} = 0.375$$

Question 119

It is vibrating at a frequency such that the joint of the two wires forms a node. If the number of antinodes in wire A is p and that in B is q then the ratio $p : q$ is

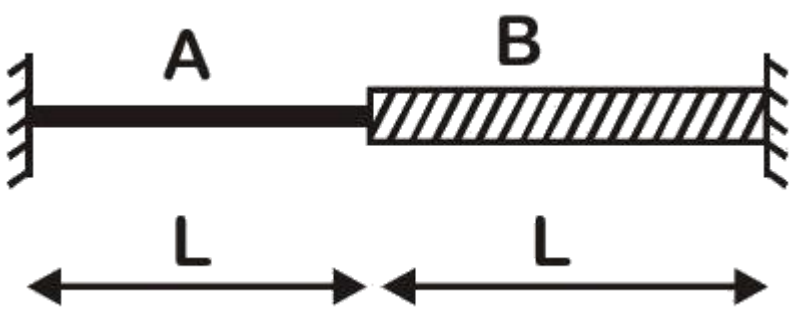

A. $4 : 9$

B. $1 : 2$

C. $3 : 5$

D. $1 : 4$

Correct answer: B

Source solution

The energy density of an electromagnetic wave is

$$u = \frac{1}{2}\varepsilon_0 E_0^2.$$

Hence,

$$u \propto E_0^2.$$

Therefore,

$$\frac{E_A}{E_B} = \sqrt{\frac{u_A}{u_B}}.$$

Given,

$$\frac{u_B}{u_A} = 4,$$

so

$$\frac{E_A}{E_B} = \sqrt{\frac{u_A}{u_B}} = \frac{1}{2}.$$

For electromagnetic radiation emitted by an oscillating charge,

$$E_0 \propto \frac{1}{r}.$$

Thus,

$$\frac{E_A}{E_B} = \frac{r_B}{r_A} = \frac{1}{2}.$$

Hence,

$$\frac{r_A}{r_B} = 2.$$

Since the waves have the same frequency,

$$v = f\lambda \quad \Rightarrow \quad \lambda \propto v.$$

Therefore,

$$\frac{\lambda_A}{\lambda_B} = \frac{v_A}{v_B} = \frac{r_A}{r_B} = 2.$$

Thus,

$$\lambda_A = 2\lambda_B.$$

If

$$\frac{\lambda_B}{\lambda_A} = \frac{p}{q},$$

then

$$\frac{p}{q} = \frac{\lambda_B}{\lambda_A} = \frac{1}{2}.$$

Hence,

$$\boxed{\frac{p}{q} = \frac{1}{2}}.$$

Question 120

The point A moves with a uniform speed along the circumference of a circle of radius 0.36 m and cover $30°$ in 0.1 s . The perpendicular projection ' P ' form ' A ' on the diameter MN represents the simple harmonic motion of ' P '. The restoration force per unit mass when P touches M will be:

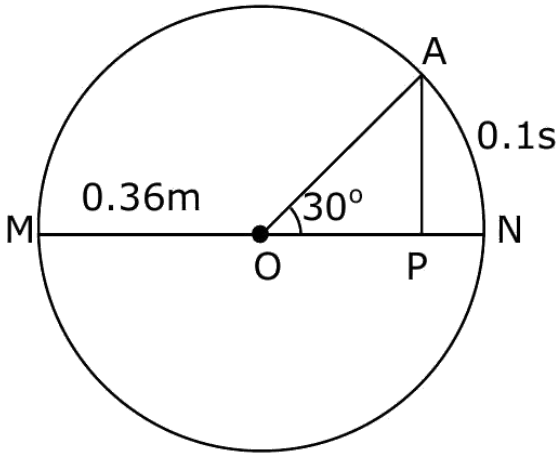

A. 100 N

B. 50 N

C. 9.87 N

D. 0.49 N

Correct answer: C

Source solution

Sol.

The point a covers $30°$ in $0.1\,\mathrm{s}$. This means

$$\frac{\pi}{6} \longrightarrow 0.1\,\mathrm{s}.$$

Thus,

$$1 \longrightarrow \frac{0.1}{\frac{\pi}{6}}.$$

For 2π, we have

$$2\pi \longrightarrow \frac{0.1 \times 6}{\pi} \times 2\pi.$$

This gives us

$$\mathrm{T} = 1.2\,\mathrm{s}.$$

We know that

$$\omega = \frac{2\pi}{\mathrm{T}}.$$

Therefore,

$$\omega = \frac{2\pi}{1.2}.$$

The restoration force F is given by

$$F = m\omega^2 A.$$

Then, the restoration force per unit mass is

$$\left(\frac{F}{m}\right) = \omega^2 A.$$

Substituting the values, we have

$$\begin{aligned}\left(\frac{F}{m}\right) &= \left(\frac{2\pi}{1.2}\right)^2 \times 0.36 \\ &\cong 9.87\,\mathrm{N}.\end{aligned}$$

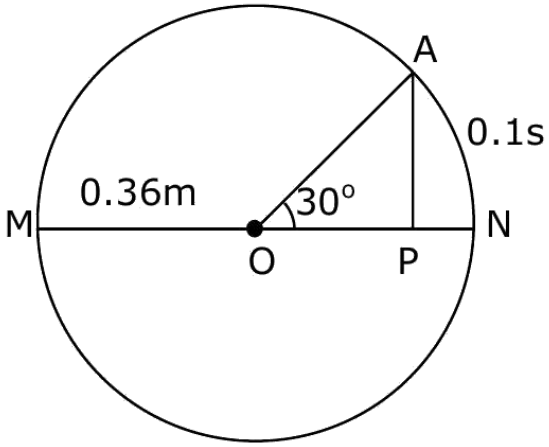
A
0.1s
0.36m
30°
M
N
O
P

Question 121

Two bodies A and B of equal mass are suspended from two massless springs of spring constant k_1 and k_2, respectively. If the bodies oscillate vertically such that their amplitudes are equal, the ratio of the maximum velocity of A to the maximum velocity of B is

A. $\sqrt{\frac{k_1}{k_2}}$

B. $\frac{k_1}{k_2}$

C. $\frac{k_2}{k_1}$

D. $\sqrt{\frac{k_2}{k_1}}$

Correct answer: A

Source solution

$$V_1 = A_1\omega_1$$

$$V_2 = A_2\omega_2$$

$$A_1 = A_2$$

$$\frac{V_1}{V_2} = \frac{\omega_1}{\omega_2} = \frac{\sqrt{\frac{K_1}{m}}}{\sqrt{\frac{K_2}{m}}}$$

$$\frac{V_1}{V_2} = \sqrt{\frac{K_1}{K_2}}$$

Question 122

A block of mass 2 kg is attached to one end of a massless spring whose other end is fixed at a wall. The spring-mass system moves on a frictionless horizontal table. The spring's natural length is 2 m and spring constant is $200\ \mathrm{N/m}$. The block is pushed such that the length of the spring becomes 1 m and then released. At distance $\mathrm{xm}(\mathrm{x}<2)$ from the wall. the speed of the block will be :

A. $10[1-(2-\mathrm{x})]^{3/2}\ \mathrm{m/s}$

B. $10\left[1-(2-\mathrm{x})^2\right]^{1/2}\ \mathrm{m/s}$

C. $10\left[1-(2-x)^2\right]\mathrm{m/s}$

D. $10\left[1-(2-x)^2\right]^2\ \mathrm{m/s}$

Correct answer: B

Source solution

Sol.

Given,

$$m=2\ \mathrm{kg}, \qquad k=200\ \mathrm{N\ m^{-1}}.$$

Natural length of the spring

$$=2\ \mathrm{m}.$$

Initial compression,

$$x_i=1\ \mathrm{m}.$$

When the spring length becomes x, the compression is

$$x_f=(2-x)\ \mathrm{m}.$$

Using conservation of mechanical energy,

$$K_i + U_i = K_f + U_f.$$

Initially, the block is at rest:

$$K_i = 0.$$

Therefore,

$$0 + \frac{1}{2}kx_i^2 = \frac{1}{2}mv^2 + \frac{1}{2}kx_f^2.$$

Substituting the values,

$$\frac{1}{2}(200)(1)^2 = \frac{1}{2}(2)v^2 + \frac{1}{2}(200)(2-x)^2.$$

$$100 = v^2 + 100(2-x)^2.$$

Hence,

$$v^2 = 100\left[1 - (2-x)^2\right].$$

Therefore,

$$\boxed{v = 10\sqrt{1-(2-x)^2}}.$$

This gives the speed of the block when the spring length is x.

Question 123

A mass 0.9 kg , attached to a horizontal spring, executes SHM with an amplitude $\mathbf{A_1}$. When this mass passes through its mean position, then a smaller mass of 124 g is placed over it and both masses move together with amplitude $\mathbf{A_2}$. If the ratio $\frac{A_1}{A_2}$ is $\frac{\alpha}{\alpha-1}$, then the value of $\boldsymbol{\alpha}$ will be .

Numerical answer: _____

Enter the requested value (an integer; 0 decimal places). Use the units and scaling stated in the question.

Correct answer: 16

Source solution

$$\frac{1}{2}kA^2 = \frac{p^2}{2m}$$
$$\Rightarrow \left(\frac{A_1}{A_2}\right)^2 = \frac{m_2}{m_1} = \frac{1024}{900}$$
$$\Rightarrow \frac{A_1}{A_2} = \frac{32}{30} = \frac{16}{15} = \frac{16}{16-1}$$
$$\therefore \alpha = 16$$

Question 124

A simple pendulum of length 1 m has a wooden bob of mass 1 kg . It is struck by a bullet of mass $10^{-2}\ \mathbf{kg}$ moving with a speed of $2 \times 10^{2}\ \mathbf{ms}^{-1}$. The bullet gets embedded into the bob. The height to which the bob rises before swinging back is. (use $\mathbf{g} = 10\ \mathbf{m/s^2}$)

A. 0.30 m

B. 0.20 m

C. 0.35 m

D. 0.40 m

Correct answer: B

Source solution

Sol.

$$\mu = (\mathrm{M} + \mathrm{m}) \cdot V$$
$$10^{-2} \cdot 2 \cdot 10^{2} \cong 1 \cdot V$$
$$V \cong 2\,\mathrm{m/s}$$
$$h = \frac{V^2}{2g} = 0.2\,\mathrm{m}$$

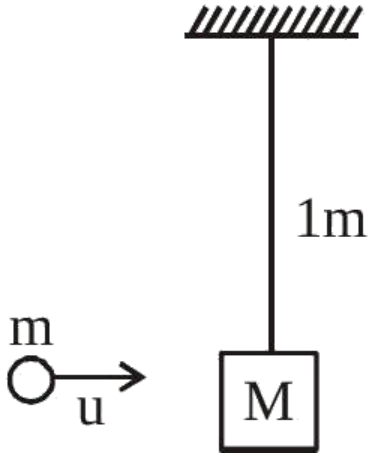

Question 125

A block of mass m attached to a massless spring is performing oscillatory motion of amplitude ' A ' on a frictionless horizontal plane. If half of the mass of the block breaks off when it is passing through its equilibrium point, the amplitude of oscillation for the remaining system become fA. The value of f is :

A. $\frac{1}{\sqrt{2}}$

B. $\frac{1}{2}$

C. 1

D. $\sqrt{2}$

Correct answer: D

Source solution

Sol.

For a particle executing SHM,

$$v_{\max} = A\omega.$$

Initially,

$$v_1 = A\omega.$$

After the spring constant is doubled,

$$k' = 2k.$$

The new angular frequency is

$$\omega' = \sqrt{\frac{k'}{m}} = \sqrt{\frac{2k}{m}} = \sqrt{2}\,\omega.$$

Given that the maximum speed remains the same,

$$v_1 = v_2.$$

Therefore,

$$A\omega = A'\omega'.$$

$$A\omega = A'(\sqrt{2}\,\omega).$$

Cancelling ω,

$$A = A'\sqrt{2}.$$

Hence,

$$\boxed{A' = \frac{A}{\sqrt{2}}}.$$

Question 126

A pendulum of length 2 m consists of a wooden bob of mass 50 g . A bullet of mass 75 g is fired towards the stationary bob with a speed v. The bullet emerges out of the bob with a speed $\frac{v}{3}$ and the bob just completes the vertical circle. The value of v is ms^{-1}. (if $\mathbf{g = 10\ m/s^2}$)

Numerical answer: _____

Enter the requested value (an integer; 0 decimal places). Use the units and scaling stated in the question.

Correct answer: 10

Source solution

Considering Only Horizontal direction

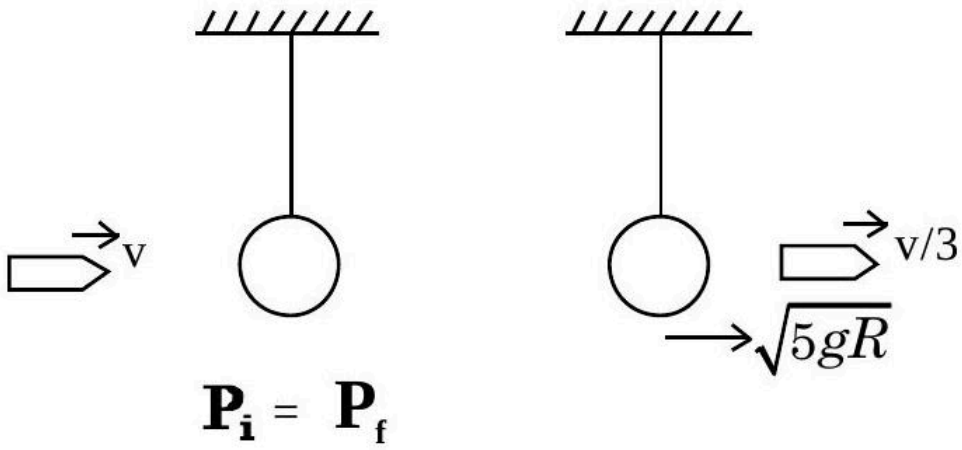

$(75v) + 0 = 50(\sqrt{5gR}) + 75\frac{v}{3}$
$75\left(v - \frac{v}{3}\right) = 50\sqrt{100}$
$v = 10\ \mathrm{m/s}$

Waves

Questions 127-136 / 10 selected / 3.3% practice weight / Next

Question 127

Sodium light of wavelengths 650 nm and 655 nm is used to study diffraction at a single slit of aperture 0.5 mm . The distance between the slit and the screen is 2.0 m . The separation between the positions of the first maxima of diffraction pattern obtained in the two cases is $\times 10^{-5}\ \mathrm{m}$.

Numerical answer: _____

Enter the requested value (an integer; 0 decimal places). Use the units and scaling stated in the question.

Correct answer: 3

Source solution

$$a\sin\theta = \frac{3\lambda}{2}$$
$$\frac{y}{L} = \theta = \frac{3\lambda}{2a}$$
$$L = 2\ \mathrm{m}$$
$$y_1 = \frac{3\lambda_1 L}{2a}$$
$$\lambda_2 = 655\ \mathrm{nm}$$
$$y_2 = \frac{3\lambda_2 L}{2a}$$
$$\lambda_1 = 650\ \mathrm{nm}$$
$$a = 0.5\ \mathrm{nm}$$
$$\Delta y = y_2 - y_1 = \frac{3(\lambda_2-\lambda_1)}{2a}L$$
$$= \frac{3(655-650)}{2\times 0.5\times 10^{-3}} \times 2 \times 10^{-9}$$
$$= \frac{3\times 5\times 2}{1\times 10^{-3}} \times 10^{-9}$$
$$= 3 \times 10^{-5}$$

Question 128

In a Young's double slit experiment, an angular width of the fringe is 0.35° on a screen placed at 2 m away for particular wavelength of 450 nm . The angular width of the fringe, when whole system is immersed in a medium of refractive index $7/5$, is $\frac{1}{\alpha}$. The value of α is

Numerical answer: _____

Enter the requested value (an integer; 0 decimal places). Use the units and scaling stated in the question.

Correct answer: 4

Source solution

$$\beta = \frac{0.35 \times 5}{7} = 0.25$$

$$\frac{1}{\alpha} = \frac{25}{100}$$

$$\alpha = 4$$

Question 129

As shown in the figure, in Young's double slit experiment, a thin plate of thickness $t = 10\mu\ \mathrm{m}$ and refractive index $\mu = 1.2$ is inserted infront of slit S_1. The experiment is conducted in air ($\mu = 1$) and uses a monochromatic light of wavelength $\lambda = 500\ \mathrm{nm}$. Due to the insertion of the plate, central maxima is shifted by a distance of $x\beta_0$. β_0 is the fringe-width befor the insertion of the plate. The value of the x is .

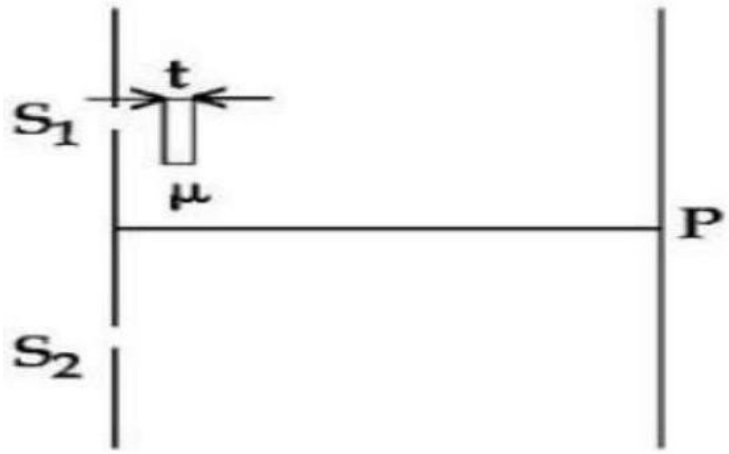

Numerical answer: _____

Enter the requested value (an integer; 0 decimal places). Use the units and scaling stated in the question.

Correct answer: 4

Source solution

Given $\mathrm{t} = 10 \times 10^{-6}\ \mathrm{m}$

$\mu = 1.2$

$\lambda = 500 \times 10^{-9}\ \mathrm{m}$

When the glass slab inserted infront of one slit then the shift of central fringe is obtained by

$$t = \frac{n\lambda}{(\mu - 1)}$$

$$\Rightarrow \quad 10 \times 10^{-6} = \frac{n \times 500 \times 10^{-9}}{(1.2 - 1)}$$

$$10 \times 10^{-6} = \frac{n \times 500 \times 10^{-9}}{0.2}$$

$$n = 4$$

Question 130

In a Young's double slit experiment, the intensities at two points, for the path differences $\frac{\lambda}{4}$ and $\frac{\lambda}{3}(\lambda$ being the wavelength of light used) are I_1 and I_2 respectively. If I_0 denotes the intensity produced by each one of the individual slits, then $\frac{I_1+I_2}{I_0} =$.

Numerical answer: _____

Enter the requested value (an integer; 0 decimal places). Use the units and scaling stated in the question.

Correct answer: 3

Source solution

$I = 4I_0 \cos^2 \frac{\phi}{2}$
$\Delta\phi = \frac{2\pi}{\lambda} \times \Delta x$
$I_1 = 4I_0 \cos^2 \frac{\pi}{4} = 2I_0$
$I_2 = 4I_0 \cos^2 \frac{2\pi}{3} = I_0$
$\Rightarrow \frac{I_1+I_2}{I_0} = 3$
Ans: (3)

Question 131

In a double slit experiment shown in figure, when light of wavelength 400 nm is used, dark fringe is observed at P . If $\mathbf{D = 0.2\ m}$ the minimum distance between the slits S_1 and S_2 is mm .

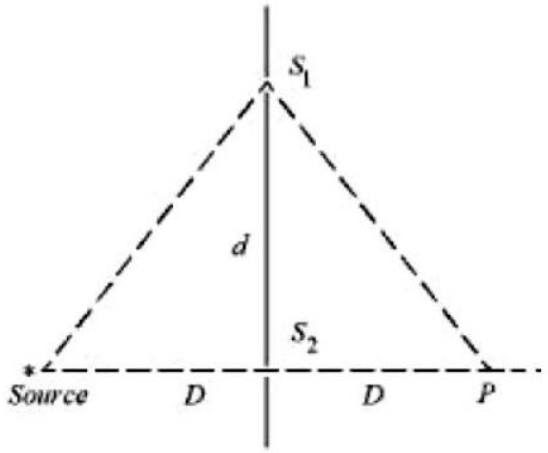

Numerical answer: _____

Enter the requested value to 1 decimal places. Use the units and scaling stated in the question.

Correct answer: 0.2

Source solution

Path difference for minima at P

$2\sqrt{D^2 + d^2} - 2D = \frac{\lambda}{2}$

$\therefore \sqrt{D^2 + d^2} - D = \frac{\lambda}{4}$

$\therefore \sqrt{D^2 + d^2} = \frac{\lambda}{4} + D$

$\Rightarrow D^2 + d^2 = D^2 + \frac{\lambda^2}{16} + \frac{D\lambda}{2}$

$\Rightarrow d^2 = \frac{D\lambda}{2} + \frac{\lambda^2}{16}$

$\Rightarrow d^2 = \frac{0.2 \times 400 \times 10^{-9}}{2} + \frac{4 \times 10^{-14}}{4}$

$\Rightarrow d^2 \approx 400 \times 10^{-10}$

$\therefore d = 20 \times 10^{-5}$

$\Rightarrow d = 0.20\ mm$

Question 132

In Young's double slit experiment, carried out with light of wavelength $5000\AA$, the distance between the slits is 0.3 mm and the screen is at 200 cm from the slits. The central maximum is at $x = 0$ cm. The value of x for third maxima is mm .

Numerical answer: _____

Enter the requested value (an integer; 0 decimal places). Use the units and scaling stated in the question.

Correct answer: 10

Source solution

$\beta = \frac{\lambda D}{d} = \frac{5\times10^{-7}\times2}{3\times10^{-4}} = \frac{10\times10^{-3}}{3}$ m

For 3rd maxima $y_3 = 3\beta = 10 \times 10^{-3}$ m $= 10$ mm

Question 133

In a YDSE interference pattern obtained with light of wavelength $\lambda_1 = 500\ \text{nm}, 15$ fringes are obtained on a certain segment of screen. If number of fringes for light of wavelength λ_2 on same segment of screen is 10 , then the value of λ_2 (in nm) is

Numerical answer: _____

Enter the requested value (an integer; 0 decimal places). Use the units and scaling stated in the question.

Correct answer: 750

Source solution

(750)
If the length of the segment is y ,
Then $y = n\beta$
$n =$ no. of fringes,
$\beta =$ fringe width
$15 \times 500 \times \frac{D}{d} = 10 \times \lambda_2 \times \frac{D}{d}$

$$\lambda_2 = 15 \times 50\ \text{nm}$$
$$\lambda_2 = 750\ \text{nm}$$

Question 134

In a Young's double slit experiment, two slits are located 1.5 mm apart. The distance of screen from slits is 2 m and the wavelength of the source is 400 nm . If the 20 maxima of the double slit pattern are contained within the centre maximum of the single slit diffraction pattern, then the width of each slit is $\mathbf{x} \times 10^{-3}$ cm, where x -value is .

Numerical answer: _____

Enter the requested value (an integer; 0 decimal places). Use the units and scaling stated in the question.

Correct answer: 15

Source solution

Width of 20 maxima of double slit = width of central maxima of single slit

$\frac{20\lambda D}{d} = \frac{2\lambda D}{a}$

$\frac{10}{d} = \frac{1}{a}$

$a = \frac{d}{10} = \frac{1.5\times10^{-1}}{10}$ cm $= 15 \times 10^{-3}$ cm

Value of x is 15

Answer is 15

Question 135

A beam of light consisting of two wavelengths $7000\AA$ and $5500\AA$ is used to obtain interference pattern in Young's double slit experiment. The distance between the slits is 2.5 mm and the distance between the plane of slits and the screen is 150 cm . The least distance from the central fringe, where the bright fringes due to both the wavelengths coincide, is $\mathbf{n} \times 10^{-5}$ m. The value of n is .

Numerical answer: _____

Enter the requested value (an integer; 0 decimal places). Use the units and scaling stated in the question.

Correct answer: 462

Source solution

$\mathbf{d} = 2.5\ \mathbf{mm}, \mathbf{D} = 150\ \mathbf{cm}$

Fringe width $\beta = \frac{\lambda D}{d}$

Let $\mathbf{n}^{\mathbf{th}}$ bright tringle of $\boldsymbol{\lambda_1}$ match with $\mathbf{m}^{\mathbf{th}}$ bright triangle of $\boldsymbol{\lambda_2}$

$\Rightarrow n\beta_1 = m\beta_2$

$\Rightarrow n\lambda_1 = m\lambda_2 \Rightarrow \frac{n}{m} = \frac{\lambda_2}{\lambda_1} = \frac{5500}{7000}$

$\Rightarrow \frac{n}{m} = \frac{11}{14}$

Distance where bright fringe will match

$= n\beta_1 = \frac{11 \times 7000A^0 \times 150\ \text{cm}}{0.25\ \text{cm}}$

$= 462 \times 10^{-5}$

Question 136

Two slits are 1 mm apart and the screen is located 1 m away from the slits. A light wavelength 500 nm is used. The width of each slit to obtain 10 maxima of the double slit pattern within the central maximum of the single slit pattern is $\ldots\ldots\ldots\times 10^{-4}\ \mathrm{m}$.

Numerical answer: _____

Enter the requested value (an integer; 0 decimal places). Use the units and scaling stated in the question.

Correct answer: 2

Source solution

$\mathrm{d}=1\ \mathrm{mm}, \mathrm{D}=1\ \mathrm{m}, \lambda=500\ \mathrm{nm}$

$10\left(\frac{\lambda \mathrm{D}}{\mathrm{d}}\right)=\frac{2\lambda \mathrm{D}}{\mathrm{a}}$

$\mathrm{a}=\frac{\mathrm{d}}{5}$

$$=\frac{10\times 10^{-4}\ \mathrm{m}}{5}$$
$$=2\times 10^{-4}$$

Electric Charges and Fields

Questions 137-147 / 11 selected / 3.7% practice weight / Focus first

Question 137

Two small spheres each of mass 10 mg are suspended from a point by threads 0.5 m long. They are equally charged and repel each other to a distance of 0.20 m . Then charge on each of the sphere is $\frac{a}{21} \times 10^{-8}\mathrm{C}$. The value of 'a' will be .

Numerical answer: _____

Enter the requested value (an integer; 0 decimal places). Use the units and scaling stated in the question.

Correct answer: 20

Source solution

20

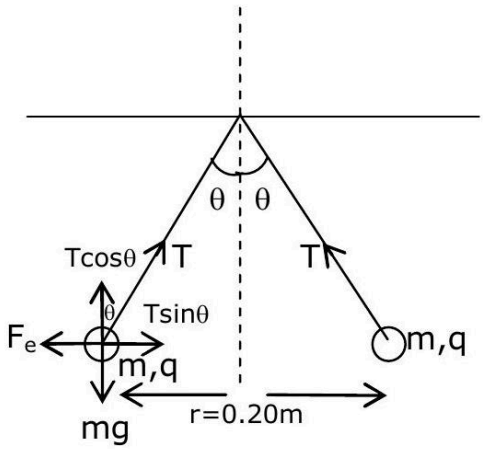

$\mathrm{T}\sin\theta = \frac{\mathrm{kq}^2}{\mathrm{r}^2}$
$\mathrm{T}\cos\theta = \mathrm{mg}$
$\tan\theta = \frac{\mathrm{kq}^2}{\mathrm{mgr}^2}$
$\mathrm{q}^2 = \frac{\tan\theta \mathrm{mgr}^2}{\mathrm{k}}$
$\because \tan\theta = \frac{0.1}{0.5} = \frac{1}{5}$
$\mathrm{q}^2 = \frac{1}{5} \times \frac{10\times10^{-6}\times10\times0.2\times0.2}{9\times10^9}$
$\mathrm{q} = \frac{2\sqrt{2}}{3} \times 10^{-8}$

after comparison from the given equation

$\mathbf{a = 20}$

Question 138

A charge particle of mass m and charge q is released from rest in uniform electric fiel(4) Its graph between velocity (v) and distance (x) will be :

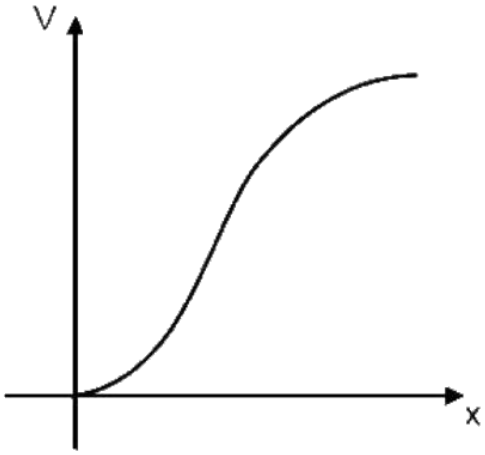

A.

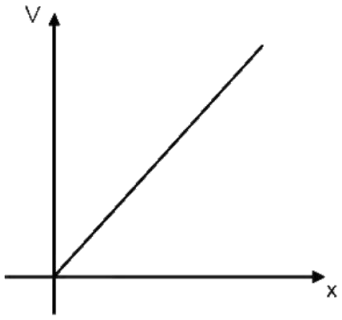

B.

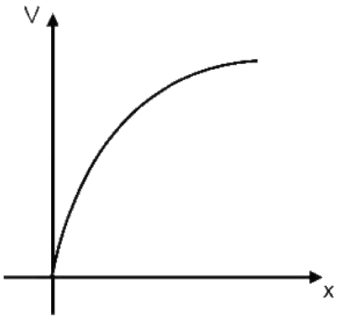

C.

D.

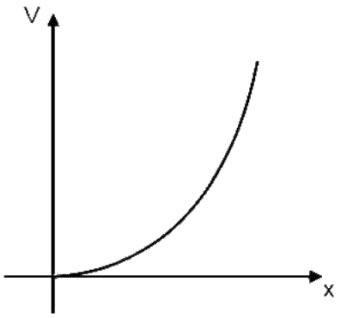

Correct answer: B

Source solution

Sol. Applying the work-energy theorem,

$$qEx = \frac{1}{2}mv^2 \quad \Rightarrow \quad v^2 \propto x$$

Hence, the answer will be option (2).

Question 139

A proton is moving undeflected in a region of crossed electric and magnetic fields at a constant speed of $2 \times 10^5\ \mathrm{ms}^{-1}$. When the electric field is switched off, the proton moves along a circular path of radius 2 cm . The magnitude of electric field is $x \times 10^4\ \mathrm{N/C}$. the value of x is .
Take the mass of the proton $= 1.6 \times 10^{-27}\ \mathrm{kg}$.

Numerical answer: _____

Enter the requested value (an integer; 0 decimal places). Use the units and scaling stated in the question.

Correct answer: 2

Source solution

For uniform speed $V = \frac{E}{B}$

$\mathrm{R} = \frac{\mathrm{mV}}{\mathrm{eB}}$

$= \frac{mV^2}{eE}$

$\Rightarrow \mathrm{E} = \frac{\mathrm{mV}^2}{\mathrm{eR}}$

$= \frac{1.6 \times 10^{-27} \times 4 \times 10^{10}}{1.6 \times 10^{-19} \times 2 \times 10^{-2}}$

$= 2 \times 10^4\ \mathrm{N/C}.$

Question 140

Two uniformly charged spherical conductors A and B of radii 5 mm and 10 mm are separated by a distance of 2 cm . If the spheres are connected by a conducting wire, then in equilibrium condition, the ratio of the magnitudes of the electric fields at the surface of the sphere A and B will be :

A. $1:2$

B. $2:1$

C. $1:1$

D. $1:4$

Correct answer: B

Source solution

$$V_A = V_B$$

$$\frac{KQ_A}{R_A} = \frac{KQ_B}{R_B}$$
$$\frac{Q_A}{Q_B} = \frac{R_A}{R_B} = \frac{1}{2}$$

$$E_A = \frac{KQ_A}{R_A^2}, \qquad E_B = \frac{KQ_B}{R_B^2}$$

$$\frac{E_A}{E_B} = \frac{Q_A}{Q_B} \cdot \frac{R_B^2}{R_A^2} = \frac{R_A}{R_B} \cdot \frac{R_B^2}{R_A^2} = \frac{R_B}{R_A} = \frac{2}{1}$$

$$\boxed{\frac{E_A}{E_B} = 2}$$

Question 141

A particle of mass 1 mg and charge q is lying at the mid-point of two stationary particles kept at distance '2 m' when each is carrying same charge 'q'. If the free charged particle is displaced from its equilibrium position through distance 'x' $(x \ll 1\ m)$. The particle executes SHM. Its angular frequency of oscillation will be ___ $\times 10^5 rad/s$ if $q^2 = 10C^2$

Numerical answer: _____

Enter the requested integer (0 decimal places).

Correct answer: 6

Source solution

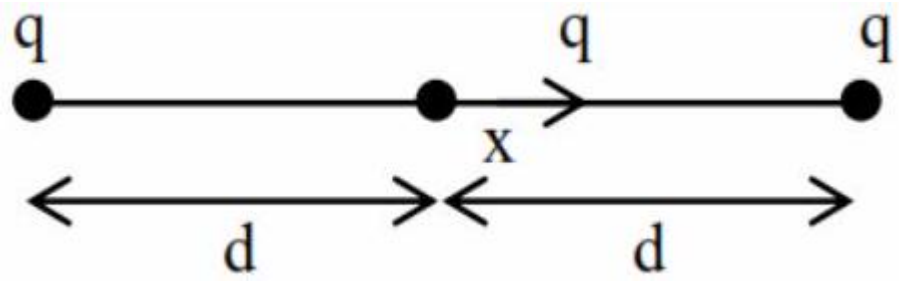

Net force on free charged particle

$$F = \frac{kq^2}{(d+x)^2} - \frac{kq^2}{(d-x)^2}$$

$$F = -kq^2\left[\frac{4dx}{\left(d^2-x^2\right)^2}\right]$$

$$a = -\frac{4kq^2\,d}{m}\left(\frac{x}{d^4}\right)$$

$$a = -\left(\frac{4kq^2}{md^3}\right)x$$

So, angular frequency

$$\omega = \sqrt{\frac{4kq^2}{md^3}}$$

$$\omega = \sqrt{\frac{4\times 9\times 10^9\times 10}{1\times 10^{-6}\times 1^3}}$$

$$\omega = 6\times 10^8 rad/sec$$

Question 142

A uniform electric field of $10\ \mathrm{N/C}$ is created between two parallel charged pates (as shown in figure). An electron enters the field symmetrically between the plates with a kinetic energy 0.5 eV . The length of each pate is 10 cm . The angle (θ) of deviation of the path of electron as it comes out of the field is (in degree).

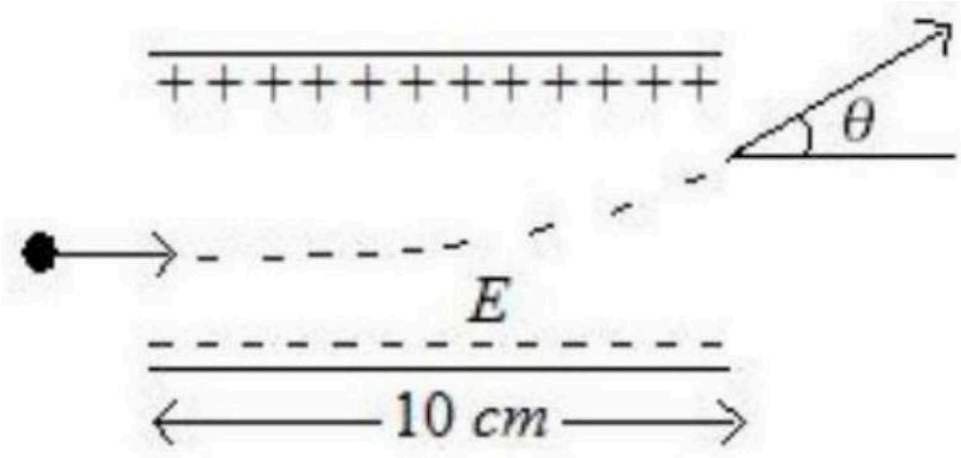

Numerical answer: _____

Enter the requested value (an integer; 0 decimal places). Use the units and scaling stated in the question.

Correct answer: 45

Source solution

45^0

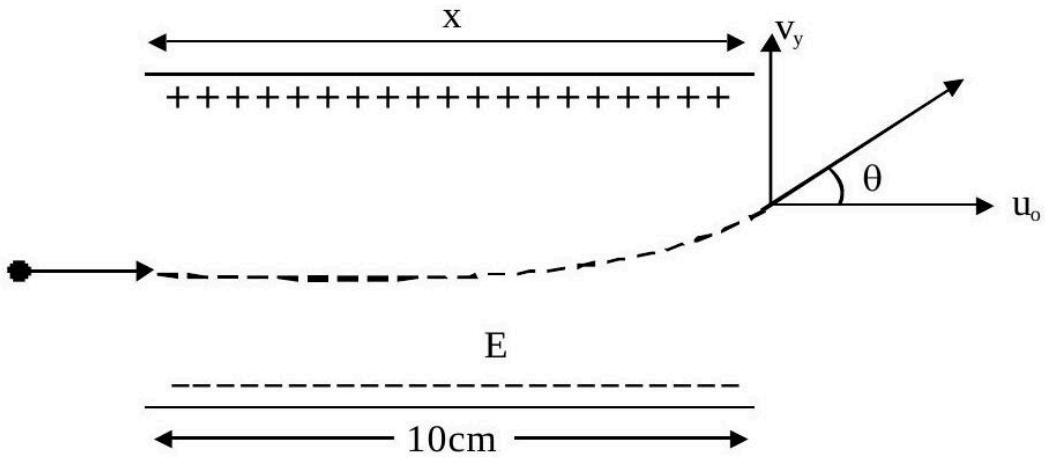

Force due to electric field is given by $\vec{F} = q\vec{E}$

$\therefore F = eE$

$\Rightarrow a = \frac{eE}{m}$

The electron will take a parabolic path i.e., projectile motion.

Here, $s_x = 10\ \text{cm} = 0.1\ \text{m}$

$\therefore t = \frac{0.1}{u_x} - - - - (i)$

Now $v_y = u_y + a_y t$

$$\Rightarrow v_y = 0 + \frac{eE}{m} \times \frac{0.1}{u_x} \quad \text{(ii)}$$

Also $KE = \frac{1}{2}mv^2 = \frac{1}{2}mu_x^2$

$mu_x^2 = 2 \times KE = 2 \times 0.5e = e - - - -$ (iii)

From eq (i),(ii) and (iii), $\tan\theta = \frac{v_y}{u_x} = \frac{eE}{m} \times \frac{0.1}{u_x} \times \frac{1}{u_x} = \frac{0.1eE}{mu_x^2} = \frac{0.1eE}{e} = 0.1 \times 10 = 1$

$\Rightarrow \tan\theta = 1$

$\therefore \theta = 45^0$

Question 143

A point charge of $+12\mu C$ is at a distance 6 cm vertically above the centre of a square of side 12 cm as shown in figure. The magnitude of the electric flux through the square will be $\times 10^3 Nm^2/C$.

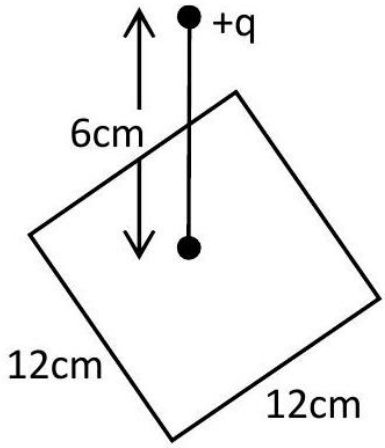

Numerical answer: _____

Enter the requested value (an integer; 0 decimal places). Use the units and scaling stated in the question.

Correct answer: 226

Source solution

Using Gauss law, it is a part of cube of side 12 cm and charge at centre so;

$\phi = \frac{Q}{6\epsilon_0} = \frac{12\mu C}{6\epsilon_0} = 2 \times 4\pi \times 9 \times 10^9 \times 10^{-6}$

$= 226 \times 10^3 Nm^2/C$

Question 144

Three infinitely long charged thin sheets are placed as shown in figure. The magnitude of electric field at the point P is $\frac{x\sigma}{\epsilon_0}$. The value of x is (all quantities are measured in SI units).

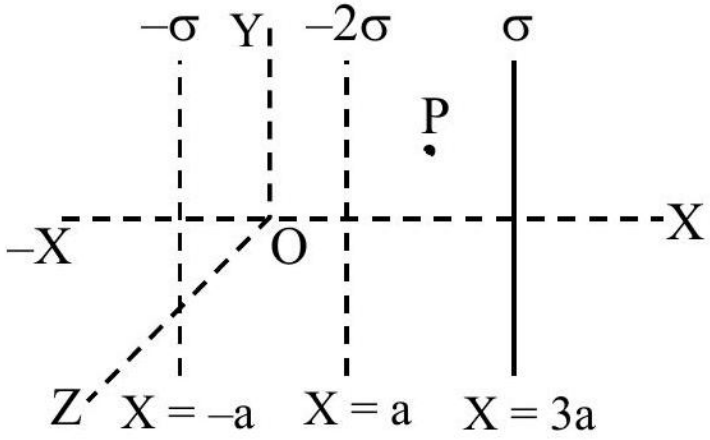

Numerical answer: _____

Enter the requested value (an integer; 0 decimal places). Use the units and scaling stated in the question.

Correct answer: 2

Source solution

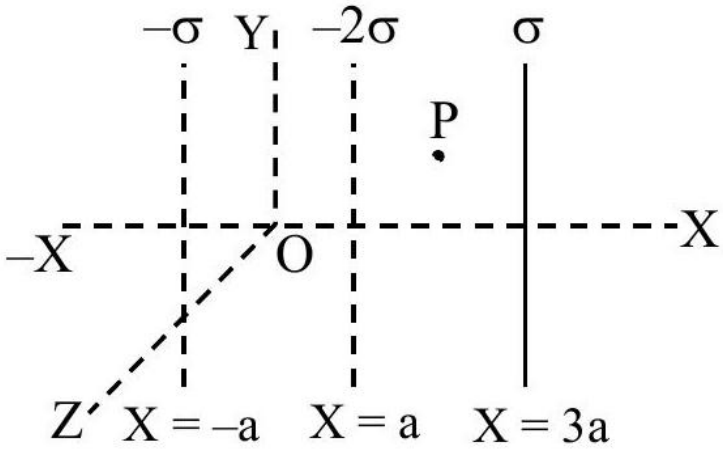

$$\vec{E}_p = \left(\frac{\sigma}{2\varepsilon_0} + \frac{2\sigma}{2\varepsilon_0} + \frac{\sigma}{2\varepsilon_0}\right)(-\hat{i})$$
$$= -\frac{2\sigma}{\varepsilon_0}\hat{i}$$

Question 145

An electric dipole of dipole moment is $6.0 \times 10^{-6} \mathrm{Cm}$ placed in a uniform electric field of $1.5 \times 10^{3} \mathrm{NC}^{-1}$ in such a way that dipole moment is along electric field. The work done in rotating dipole by 180° in this field will be mJ

Numerical answer: _____

Enter the requested value (an integer; 0 decimal places). Use the units and scaling stated in the question.

Correct answer: 18

Source solution

The work done in rotating the electric dipole $= \Delta U$

$= U_f - U_i$

$= (-pE\cos(180^{\circ})) - (-pE\cos(0^{\circ}))$

$= pE + pE = 2pE$

$= 2 \times 6 \times 10^{-6} \times 1.5 \times 10^{3} = 18\ \mathrm{mJ}$

Question 146

An electric field of $1000\ \mathrm{V/m}$ is applied to an electric dipole at angle of $45°$. The value of electric dipole moment is $10^{-29}\mathrm{C.m}$. What is the potential energy of the electric dipole ?

A. $-9 \times 10^{-20}\ \mathrm{J}$

B. $-7 \times 10^{-27}\ \mathrm{J}$

C. $-10 \times 10^{-29}\ \mathrm{J}$

D. $-20 \times 10^{-18}\ \mathrm{J}$

Correct answer: B

Source solution

Sol. $U = -\vec{P} \cdot \vec{E}$

$$
\begin{aligned}
&= -\mathrm{PE}\cos\theta \\
&= -\left(10^{-29}\right)\left(10^{3}\right)\cos 45° \\
&= -0.707 \times 10^{-26}\ \mathrm{J} \\
&= -7 \times 10^{-27}\ \mathrm{J}.
\end{aligned}
$$

Question 147

An electric dipole of dipole moment $6 \times 10^{-6}\mathrm{Cm}$ is placed in uniform electric field of magnitude $10^{6}\ \mathrm{V/m}$. Initially, the dipole moment is parallel to electric field. The work that needs to be done on the dipole to make its dipole moment opposite to the field, will be J.

Numerical answer: _____

Enter the requested value (an integer; 0 decimal places). Use the units and scaling stated in the question.

Correct answer: 12

Source solution

$p = 6 \times 10^{-6}\mathrm{Cm}$

$\mathrm{E} = 10^{6}\mathrm{v/m}$

$\mathrm{W} = \Delta\mathrm{U} = -\mathrm{pE}\left(\cos\theta_{\mathrm{f}} - \cos\theta_{\mathrm{i}}\right)$

$\mathrm{W} = 2\mathrm{pE} = 12\ \mathrm{J}$

Electrostatic Potential and Capacitance

Questions 148-161 / 14 selected / 4.7% practice weight / Focus first

Question 148

A parallel plate capacitor consisting of two circular plates of radius 10 cm is being charged by a constant current of 0.15 A . If the rate of change of potential difference between the plates is $7 \times 10^8\ \mathrm{V/s}$ then the integer value of the distance between the parallel plates is -
(Take, $\epsilon_0 = 9 \times 10^{-12} \frac{\mathrm{F}}{\mathrm{m}}, \pi = \frac{22}{7}$) $\mu\mathrm{m}$.

Numerical answer: _____

Enter the requested value (an integer; 0 decimal places). Use the units and scaling stated in the question.

Correct answer: 1320

Source solution

$$V = \frac{Q}{C} = \frac{it}{\left(\frac{\epsilon_0 A}{d}\right)} = \frac{itd}{\epsilon_0(\pi r^2)}$$

$$\Rightarrow \mathrm{d} = \frac{\epsilon_0(\pi r^2)}{\mathrm{i}}\left(\frac{\mathrm{v}}{\mathrm{t}}\right)$$

$$= \frac{\left(9\times10^{-12}\right)\left(\frac{22}{7}\right)(0.1)^2}{0.15}\left(7 \times 10^8\right)\mathrm{m}$$

$$\mathrm{d} = 1320\mu\ \mathrm{m}$$

Question 149

An ac source is connected in given series LCR circuit. The rms potential difference across the capacitor of $20\mu\,\mathrm{F}$ is V.

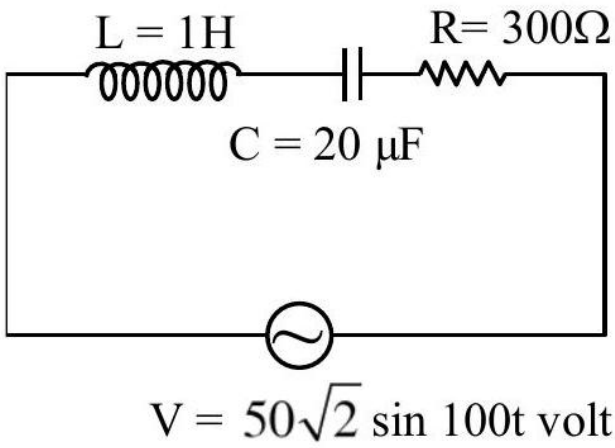

Numerical answer: _____

Enter the requested value (an integer; 0 decimal places). Use the units and scaling stated in the question.

Correct answer: 50

Source solution

$\mathrm{X_L} = \omega \mathrm{L} = 100 \times 1 = 100\Omega$

$\mathrm{X_C} = \frac{1}{\omega \mathrm{C}} = \frac{1}{100 \times 20 \times 10^{-6}} = 500\Omega$

$\mathrm{Z} = \sqrt{(\mathrm{X_L} - \mathrm{X_C})^2 + \mathrm{R}^2}$

$\sqrt{(100 - 500)^2 + 300^2}$

$\mathrm{Z} = 500\Omega$

$\mathrm{i_{rms}} = \frac{\mathrm{V_{rms}}}{\mathrm{Z}} = \frac{50}{500} = 0.1\ \mathrm{A}$

rms voltage across capacitor

$\mathrm{V_{rms}} = \mathrm{X_C i_{rms}}$

$= 500 \times 0.1 = 50\ \mathrm{V}$

Question 150

An alternating emf $\mathbf{E = 110\sqrt{2}\sin 100t}$ volt is applied to a capacitor of $\mathbf{2\mu\ F}$, the rms value of current in the circuit is mA .

Numerical answer: _____

Enter the requested value (an integer; 0 decimal places). Use the units and scaling stated in the question.

Correct answer: 22

Source solution

$$C = 2\mu f; \quad E = 110\sqrt{2}\sin(100t)$$

$$\mathbf{X_C = \frac{1}{\omega c} = \frac{1}{100\times 2\times 10^6}}$$

$$\mathbf{= \frac{10000}{2} = 5000\Omega}$$

$$\mathbf{i_o = \frac{110\sqrt{2}}{5000}}$$

$$\mathbf{i_{rms} = \frac{110\sqrt{2}}{5000\sqrt{2}}}$$

$$\mathbf{= \frac{110}{5}\ mA}$$

$$\mathbf{= 22\ mA}$$

Question 151

The charge accumulated on the capacitor connected in the following circuit is μC (Given $C = 150\mu F$)

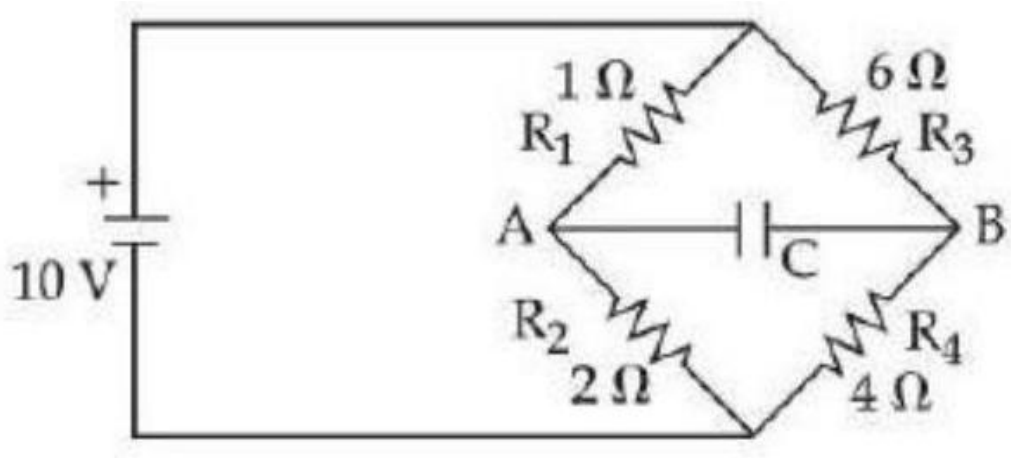

Numerical answer: _____

Enter the requested value (an integer; 0 decimal places). Use the units and scaling stated in the question.

Correct answer: 400

Source solution

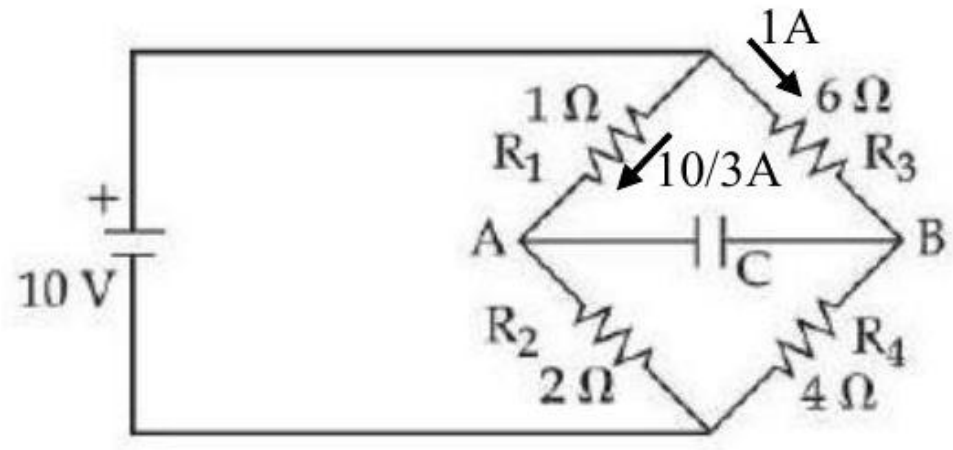

$V_A + \frac{10}{3}(1) - 6(1) = V_B$
$V_A - V_B = 6 - \frac{10}{3} = \frac{8}{3}$ volt
$Q = C(V_A - V_B)$
$= 150 \times \frac{8}{3} = 400\mu C$

Question 152

If q_f is the magnitude of the free charge on a capacitor plate and q_b is the magnitude of bound charge on the adjacent face of a dielectric slab of dielectric constant k fully filling the gap, then q_b can be expressed as:

A. $q_b = q_f\left(1 - \frac{1}{\sqrt{k}}\right)$

B. $q_b = q_f\left(1 - \frac{1}{k}\right)$

C. $q_b = q_f\left(1 + \frac{1}{\sqrt{k}}\right)$

D. $q_b = q_f\left(1 + \frac{1}{k}\right)$

Corrected practice version: Corrected the word bound to free for charge on the metal plates. The original worked expression identifies option 2; the source key 0 was invalid. The original wording and worked answer are retained in the review package.

Correct answer: B

Source solution

The dielectric reduces the field to E0/k. The polarization charge magnitude therefore satisfies $q_b/q_f = 1 - 1/k$. Thus $q_b = q_f(1 - 1/k)$, option 2.

Question 153

A capacitor of $50\mu\ \mathrm{F}$ is connected in a circuit as shown in figure. The charge on the upper plate of the capacitor is $\mu\mathrm{C}$.

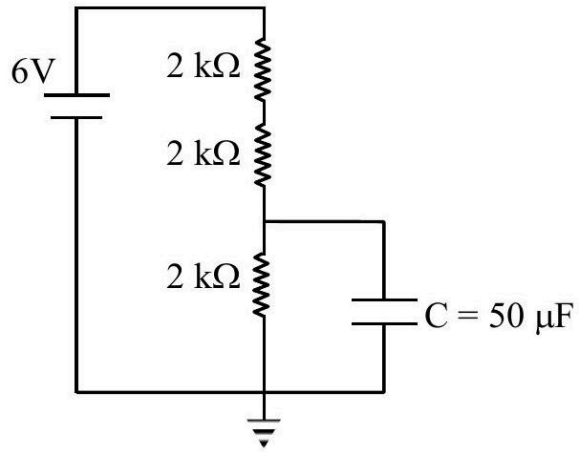

Numerical answer: _____

Enter the requested value (an integer; 0 decimal places). Use the units and scaling stated in the question.

Correct answer: 100

Source solution

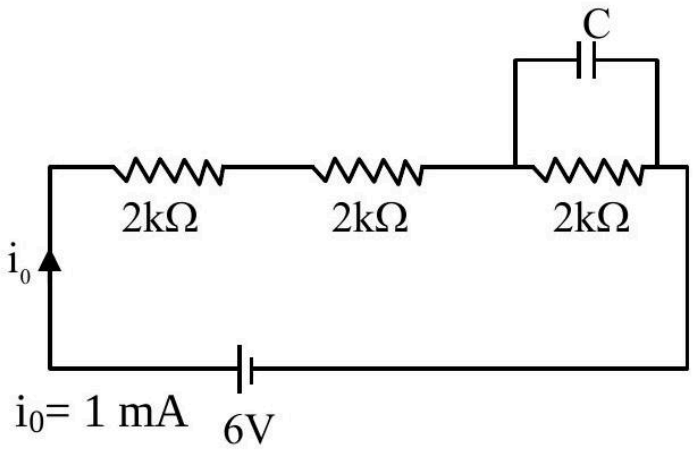

Pot. Diff. across each resistor $= 2\ \mathrm{V}$

$q = CV$

$= 50 \times 10^{-6} \times 2 = 100 \times 10^{-6} = 100\mu\mathrm{C}$ (given $\epsilon_0 = 8.8 \times 10^{-12}\mathrm{C}^2\ \mathrm{N}^{-1}\ \mathrm{m}^{-2}$)

Question 154

A parallel plate capacitor was made with two rectangular plates, each with a length of $l = 3\ \text{cm}$ and breath of $\text{b} = 1\ \text{cm}$. The distance between the plates is $3\mu\ \text{m}$. Out of the following, which are the ways to increase the capacitance by a factor of 10 ?A. $l = 30\ \text{cm},\ \text{b} = 1\ \text{cm},\ \text{d} = 1\mu\ \text{m}$B. $l = 3\ \text{cm},\ \text{b} = 1\ \text{cm},\ \text{d} = 30\mu\ \text{m}$C. $l = 6\ \text{cm},\ \text{b} = 5\ \text{cm},\ \text{d} = 3\mu\ \text{m}$D. $l = 1\ \text{cm},\ \text{b} = 1\ \text{cm},\ \text{d} = 10\mu\ \text{m}$E. $l = 5\ \text{cm},\ \text{b} = 2\ \text{cm},\ \text{d} = 1\mu\ \text{m}$ Choose the correct answer from the options given below:

A. C and E only

B. B and D only

C. A only

D. C only

Correct answer: A

Source solution

$$C = \frac{A\varepsilon_0}{d}$$

where A is the plate area and d is the separation between the plates.

Initial capacitance:

$$C_0 = \frac{\varepsilon_0\, \ell b}{d}$$

$$C_0 = \varepsilon_0\ \text{units}$$

For option C,

$$\ell = 6\,\text{cm}, \qquad b = 5\,\text{cm}, \qquad d = 3\,\text{cm}$$

$$C = \frac{\varepsilon_0(6)(5)}{3} = 10\varepsilon_0$$

For option $\boldsymbol{E}$,

$$\ell = 5\,\text{cm}, \qquad b = 2\,\text{cm}, \qquad d = 1\,\text{cm}$$

$$C = \frac{\varepsilon_0(5)(2)}{1} = 10\varepsilon_0$$

Question 155

A parallel plate capacitor was made with two rectangular plates, each with a length of $l = 3\ \text{cm}$ and breath of $\text{b} = 1\ \text{cm}$. The distance between the plates is $3\mu\ \text{m}$. Out of the following, which are the ways to increase the capacitance by a factor of 10 ?A. $l = 30\ \text{cm},\ \text{b} = 1\ \text{cm},\ \text{d} = 1\mu\ \text{m}$B. $l = 3\ \text{cm},\ \text{b} = 1\ \text{cm},\ \text{d} = 30\mu\ \text{m}$C. $l = 6\ \text{cm},\ \text{b} = 5\ \text{cm},\ \text{d} = 3\mu\ \text{m}$D. $l = 1\ \text{cm},\ \text{b} = 1\ \text{cm},\ \text{d} = 10\mu\ \text{m}$E. $l = 5\ \text{cm},\ \text{b} = 2\ \text{cm},\ \text{d} = 1\mu\ \text{m}$ Choose the correct answer from the options given below:

A. C and E only

B. B and D only

C. A only

D. C only

Correct answer: A

Source solution

Sol.

For a parallel plate capacitor,

$$C = \frac{\varepsilon_0 A}{d} = \frac{\varepsilon_0 lb}{d}.$$

Hence,

$$C \propto \frac{lb}{d}.$$

Initially,

$$\frac{lb}{d} = \frac{3 \times 1}{3} = 1.$$

To increase the capacitance by a factor of 10,

$$\frac{(lb/d)_{\text{new}}}{(lb/d)_{\text{old}}} = 10.$$

For A:

$$\frac{lb}{d} = \frac{30 \times 1}{1} = 30.$$

Factor increase

$$= 30.$$

Not correct.

For B:

$$\frac{lb}{d} = \frac{3 \times 1}{30} = \frac{1}{10}.$$

Factor change

$$= \frac{1}{10}.$$

Not correct.

For C:

$$\frac{lb}{d} = \frac{6 \times 5}{3} = 10.$$

Factor increase

$$= 10.$$

Correct.

For D:

$$\frac{lb}{d} = \frac{1 \times 1}{10} = \frac{1}{10}.$$

Not correct.

For E:

$$\frac{lb}{d} = \frac{5 \times 2}{1} = 10.$$

Factor increase

$$= 10.$$

Correct.

Therefore, the capacitance increases by a factor of 10 in cases

C and E only.

Question 156

A parallel plate capacitor has charge $5 \times 10^{-6}\text{C}$. A dielectric slab is inserted between the plates and almost fills the space between the plates. If the induced charge on one face of the slab is $4 \times 10^{-6}\text{C}$ then the dielectric constant of the slab is .

Numerical answer: _____

Enter the requested value (an integer; 0 decimal places). Use the units and scaling stated in the question.

Correct answer: 5

Source solution

$$Q_{in} = Q\left(1 - \frac{1}{K}\right)$$
$$4 \times 10^{-6} = 5 \times 10^{-6}\left(1 - \frac{1}{K}\right)$$
$$1 - \frac{1}{K} = \frac{4}{5}$$
$$K = 5$$

Question 157

A parallel plate capacitor with square plates is filled with four dielectrics of dielectric constants K_1, K_2, K_3, K_4 arranged as shown in the figure. The effective dielectric constant K will be:

$$\begin{vmatrix} K_1 & K_2 \\ K_3 & K_4 \end{vmatrix}$$

$$\text{Plate side } = L, \qquad \text{Thickness } = d$$

$$\leftarrow \frac{d}{2} \rightarrow \quad \leftarrow \frac{d}{2} \rightarrow$$

A. $\mathrm{K} = \frac{(\mathrm{K_1}+\mathrm{K_2})(\mathrm{K_3}+\mathrm{K_4})}{2(\mathrm{K_1}+\mathrm{K_2}+\mathrm{K_3}+\mathrm{K_4})}$

B. $\mathrm{K} = \frac{(\mathrm{K_1}+\mathrm{K_2})(\mathrm{K_3}+\mathrm{K_4})}{(\mathrm{K_1}+\mathrm{K_2}+\mathrm{K_3}+\mathrm{K_4})}$

C. $\mathrm{K} = \frac{(\mathrm{K_1}+\mathrm{K_4})(\mathrm{K_2}+\mathrm{K_3})}{2(\mathrm{K_1}+\mathrm{K_2}+\mathrm{K_3}+\mathrm{K_4})}$

D. $\mathrm{K} = \frac{(\mathrm{K_1}+\mathrm{K_3})(\mathrm{K_2}+\mathrm{K_4})}{\mathrm{K_1}+\mathrm{K_2}+\mathrm{K_3}+\mathrm{K_4}}$

Correct answer: D

Source solution

$$C_{12} = \frac{C_1 C_2}{C_1 + C_2} = \frac{\frac{k_1 \epsilon_0 \frac{L}{2} \cdot L}{d/2} \cdot \frac{k_2\left[\epsilon_0 \frac{L}{2} \cdot L\right]}{(k_1+k_2)\left[\frac{\epsilon_0 \cdot \frac{L}{2} \cdot L}{d/2}\right]}}{d/2}$$

$$C_{12} = \frac{k_1 k_2}{k_1 + k_2} \frac{\epsilon_0 L^2}{d}$$

In the same way, we get

$$C_{34} = \frac{k_3 k_4}{k_3 + k_4} \frac{\epsilon_0 L^2}{d}$$

$$\therefore C_{\text{eq}} = C_{12} + C_{34} = \left[\frac{k_1 k_2}{k_1 + k_2} + \frac{k_3 k_4}{k_3 + k_4}\right] \frac{\epsilon_0 L^2}{d}$$

Now if $k_{eq} = k, C_{eq} = \frac{k\epsilon_0 L^2}{d}$. On comparing equation (i) to equation (ii), we get

$$k_{eq} = \frac{k_1 k_2 (k_3 + k_4) + k_3 k_4 (k_1 + k_2)}{(k_1 + k_2)(k_3 + k_4)}$$

This does not match with any of the options, so probably they have assumed the wrong combination

$$C_{13} = \frac{k_1 \epsilon_0 L \frac{L}{2}}{d/2} + k_3 \epsilon_0 \frac{L \cdot \frac{L}{2}}{d/2}$$

$$= (k_1 + k_3)\frac{\epsilon_0 L^2}{d}$$

$$C_{24} = (k_2 + k_4)\frac{\epsilon_0 L^2}{d}$$

$$C_{eq} = \frac{C_{13} C_{24}}{C_{13} + C_{24}} = \frac{(k_1 + k_3)(k_2 + k_4)}{(k_1 + k_2 + k_3 + k_4)} \frac{\epsilon_0 L^2}{d}$$

$$= \frac{k\epsilon_0 L^2}{d}$$

$$k = \frac{(k_1 + k_3)(k_2 + k_4)}{(k_1 + k_2 + k_3 + k_4)}$$

However, this is one of the four options. It must be a bonus logically, but of the given options, probably they might go with (4).

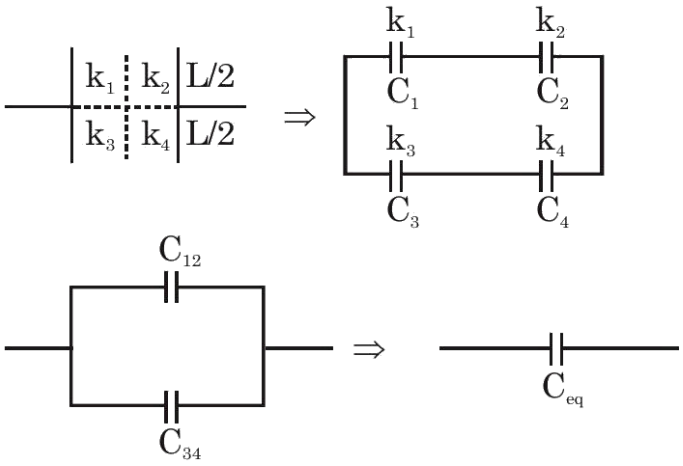

Question 158

As show in the figure, in steady state, the charge stored in the capacitor is $\times 10^{-6}\mathrm{C}$.

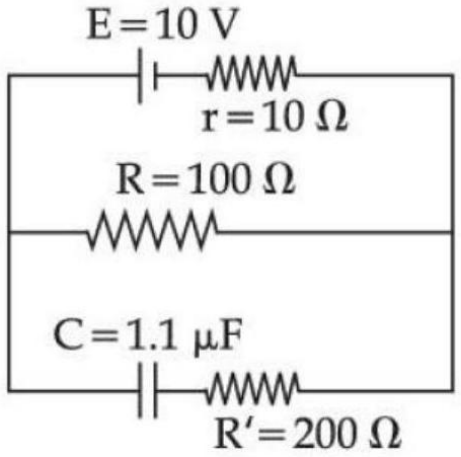

Numerical answer: _____

Enter the requested value (an integer; 0 decimal places). Use the units and scaling stated in the question.

Correct answer: 10

Source solution

$$q = CV_{100\Omega}$$
$$= \left(1.1 \times 10^{-6}\right)\left(\frac{10}{\mathrm{R}+\mathrm{r}}\mathrm{R}\right)$$
$$= 1.1 \times 10^{-6}\left(\frac{10}{110} \times 100\right)$$
$$= 10\mu\mathrm{C}$$

Question 159

A dipole with two electric charges of $2\mu\mathrm{C}$ magnitude each, with separation distance $0.5\mu\ \mathrm{m}$, is placed between the plates of a capacitor such that its axis is parallel to an electric field established between the plates when a potential difference of 5 V is applied. Separation between the plates is 0.5 mm . If the dipole is rotated by 30° from the axis, it tends to realign in the direction due to a torque. The value of torque is :

A. $5 \times 10^{-9}\mathrm{Nm}$

B. $2.5 \times 10^{-12}\mathrm{Nm}$

C. (2) $5 \times 10^{-3}\mathrm{Nm}$

D. $2.5 \times 10^{-9}\mathrm{Nm}$

Correct answer: A

Source solution

Sol.

$$E=\frac{v}{d}=\frac{5}{5\times10^{-4}}=10^{4}\,\mathrm{V/m}$$

$\tau=\mathrm{PE}\sin\theta$ where

$$P=qa=2\times10^{-6}\times5\times10^{-7}=1\times10^{-12}\,\mathrm{C\cdot m}$$

$$\tau=1\times10^{-12}\times10^{4}\times\frac{1}{2}=5\times10^{-9}\,\mathrm{N\cdot m}$$

Question 160

For changing the capacitance of a given parallel plate capacitor, a dielectric material of dielectric constant K is used, which has the same area as the plates of the capacitor. The thickness of the dielectric slab is $\frac{3}{4}$ d, where ' d ' is the separation between the plates of parallel plate capacitor. The new capacitance (C ') in terms of original capacitance (C_0) is given by the following relation :

A. $C' = \frac{3+K}{4K} C_0$

B. $C' = \frac{4+K}{3} C_0$

C. $C' = \frac{4K}{K+3} C_0$

D. $C' = \frac{4}{3+K} C_0$

Correct answer: C

Source solution

$$C_0 = \frac{\varepsilon_0 A}{d}$$

After inserting the dielectric, the capacitor can be treated as two capacitors in series.

Let the equivalent capacitance be C'.

$$\frac{1}{C'} = \frac{1}{C_1} + \frac{1}{C_2}$$

$$\frac{1}{C'} = \frac{\frac{3d}{4}}{K\varepsilon_0 A} + \frac{\frac{d}{4}}{\varepsilon_0 A}$$

$$= \frac{d}{4\varepsilon_0 A}\left(\frac{3}{K} + 1\right)$$

$$= \frac{d}{4\varepsilon_0 A}\left(\frac{3+K}{K}\right)$$

Therefore,

$$C' = \frac{4\varepsilon_0 A}{d} \cdot \frac{K}{3+K}$$

Using

$$C_0 = \frac{\varepsilon_0 A}{d},$$

$$\boxed{C' = \frac{4KC_0}{3+K}}$$

Question 161

In the figure shown below, the charge on the left plate of the $10\mu\ \mathbf{F}$ capacitor is $-30\mu\mathbf{C}$. ?The charge on the right plate of the $6\mu\ \mathbf{F}$ capacitor is :

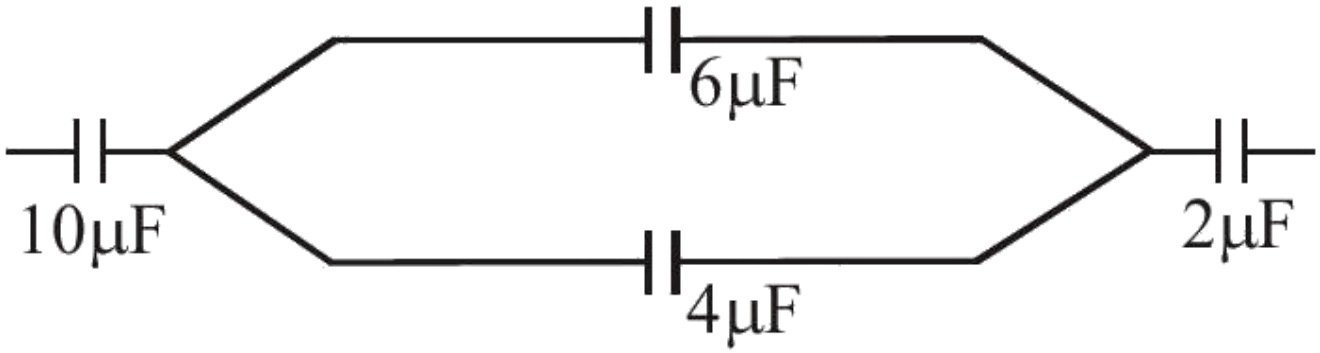

A. $-18\mu\mathrm{C}$

B. $-12\mu\mathrm{C}$

C. $+12\mu\mathrm{C}$

D. $+18\mu\mathrm{C}$

Correct answer: D

Source solution

$$C_{\text{eq}} = 6\,\mu\text{F} + 4\,\mu\text{F} = 10\,\mu\text{F}$$

$$Q_{\text{total}} = 30\,\mu\text{C}$$

$$V = \frac{Q_{\text{total}}}{C_{\text{eq}}} = \frac{30}{10} = 3\,\text{V}$$

$$Q_{6\mu\text{F}} = CV = 6 \times 3 = 18\,\mu\text{C}$$

$$Q_{4\mu\text{F}} = 4 \times 3 = 12\,\mu\text{C}$$

$$\boxed{Q_{6\mu\text{F}} = 18\,\mu\text{C}}$$

$$\boxed{+18\,\mu\text{C}}$$

Current Electricity

Questions 162-192 / 31 selected / 10.3% practice weight / Focus first

Question 162

A resistance is shown in the figure. Its value and tolerance are given respectively by:

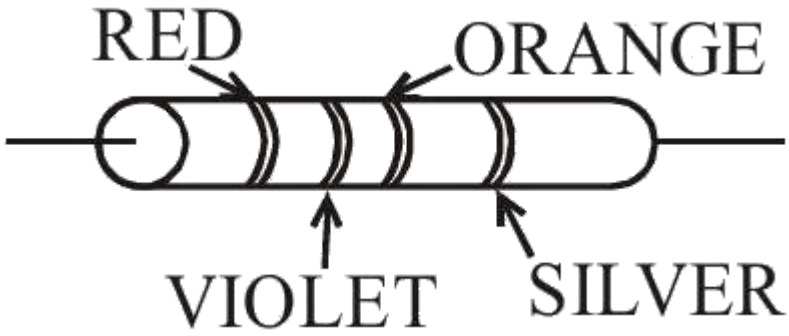

A. $27\ \mathrm{K}\Omega, 20\%$

B. $270\ \mathrm{K}\Omega, 5\%$

C. $270\ \mathrm{K}\Omega, 10\%$

D. $27\ \mathrm{K}\Omega, 10\%$

Correct answer: D

Source solution

Sol. Color code: Red violet orange silver $\mathrm{R} = 27 \times 10^3\ \Omega \pm 10\%$

$$= 27\,\mathrm{K}\,\Omega \pm 10\%$$

Question 163

A wire of resistance R is bent to form a square $ABCD$ as shown in the figure. The effective resistance between E and C is(E is mid-point of arm CD)

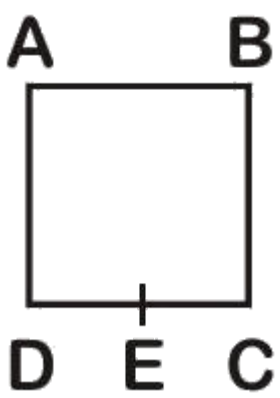

A. $\frac{3}{4}R$

B. R

C. $\frac{1}{16}R$

D. $\frac{7}{64}\mathrm{R}$

Correct answer: D

Source solution

Sol. $\mathrm{R}_1 = \frac{\mathrm{R}}{8}, \quad \mathrm{R}_2 = \frac{7\mathrm{R}}{8}$

$$\frac{1}{R_{\mathrm{eq}}} = \frac{8}{R} + \frac{8}{7R}$$

$R_{\mathrm{eq}} = \frac{7R}{64}$

Question 164

A battery of unknown emf connected to a potentiometer has balancing length 560 cm . If a resistor of resistance 10Ω is connected in parallel with the cell the balancing length change by 60 cm . If the internal resistance of the cell is $\frac{n}{10}\Omega$, the value of ' n ' is

Numerical answer: _____

Enter the requested value (an integer; 0 decimal places). Use the units and scaling stated in the question.

Correct answer: 12

Source solution

(12)

Let the emf of cell is ε internal resistance is $'r'$ and potential gradient is x.

$$\varepsilon = 560x \tag{1}$$

After connecting the resistor

$$\frac{\varepsilon \times 10}{10 + r} = 500x \tag{2}$$

From (1) and (2)

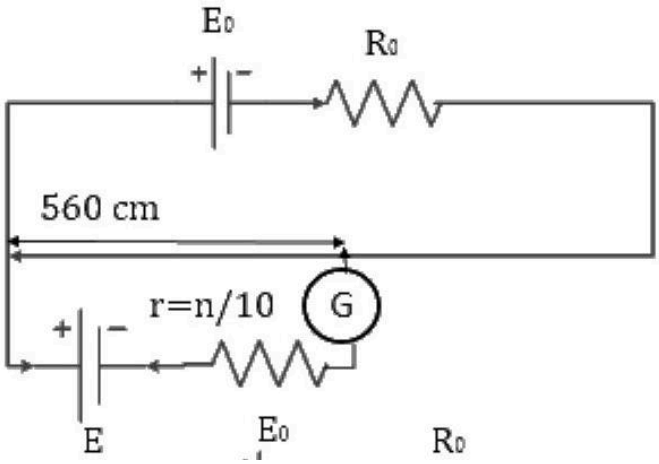

$$\frac{560 \times 10}{10 + r} = 500s$$
$$56 = 540 + 5r$$
$$r = \frac{6}{5} = 1.2\Omega$$

$$\mathbf{n = 12}$$

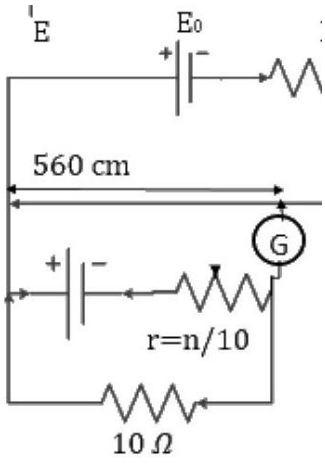

Question 165

In the given circuit, an ideal voltmeter connected across the 10Ω resistance reads 2 V . The internal resistance r, of each cell is :

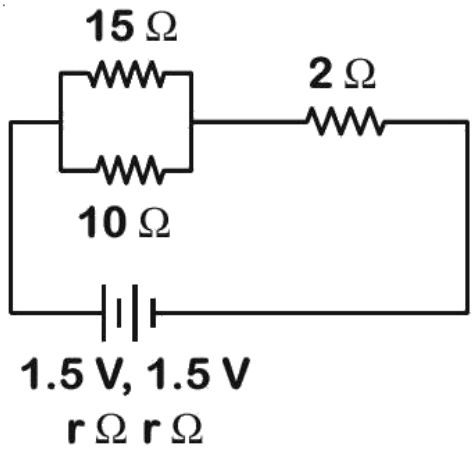

A. 0.5Ω

B. 0Ω

C. 1.5Ω

D. 1Ω

Correct answer: A

Source solution

Sol. For the given circuit, given that $\mathrm{V_{AB}} = 2\,\mathrm{V}$, we have

$$I = \frac{2}{15} + \frac{2}{10} = \frac{1}{3}\,\mathrm{A}$$

Also,

$$I(2r + 2) = 1.5 + 1.5 - \mathrm{V_{AB}}$$

$\Rightarrow 2r + 2 = (3 - 2) \cdot 3$

$\Rightarrow r = \frac{1}{2}\,\Omega$

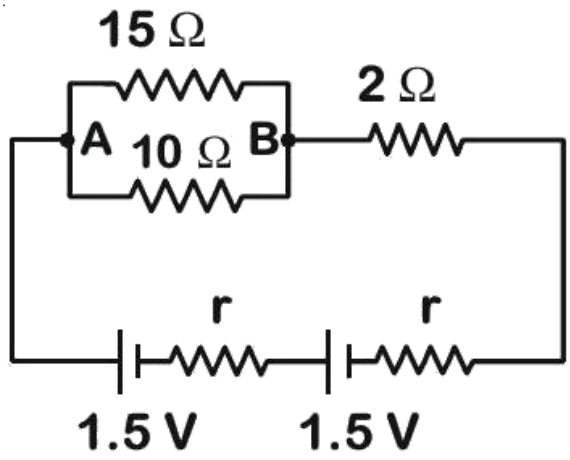
15 Ω
2 Ω
A
10 Ω
B
r
r
1.5 V
1.5 V

Question 166

Two batteries (connected in series) of same emf 10 V of internal resistances 20Ω and 5Ω are connected to a load resistance of 30Ω. Now an unknown resistance x is connected in parallel to the load resistance. Find value of x so that potential drop of battery having internal resistance 20Ω becomes zero.

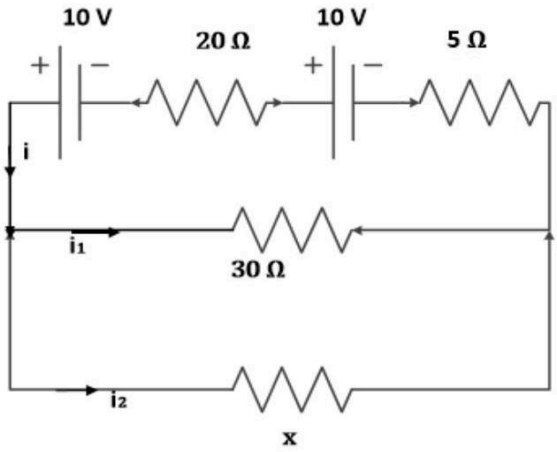

Numerical answer: _____

Enter the requested value (an integer; 0 decimal places). Use the units and scaling stated in the question.

Correct answer: 30

Source solution

(30) If V_1 and V_2 are terminal voltage across the two batteries.

$$V_1 = 0$$
$$V_1 = \varepsilon_1 - i.r_1$$
$$0 = 10 - i \times 20$$
$$i = 0.5\ \text{A}$$
$$V_2 = 10 - 0.5 \times 5$$
$$V_2 = 7.5\ \text{V}$$
$$0.5 = \frac{7.5}{30} + \frac{7.5}{x}$$
$$\frac{7.5}{x} = 0.25$$
$$x = 30\Omega$$

Question 167

The energy dissipated by a resistor is 10 mJ in 1 s when an electric current of 2 mA flows through it. The resistance is Ω.
(Round off to the Nearest Integer)

Numerical answer: _____

Enter the requested value (an integer; 0 decimal places). Use the units and scaling stated in the question.

Correct answer: 2500

Source solution

Ans. (2500)

$$Q = i^2RT$$

$$R = \frac{Q}{i^2t} = \frac{10\times10^{-3}}{4\times10^{-6}\times1} = 2500\Omega$$

Question 168

In the figure given, the electric current flowing through the $5k\Omega$ resistor is ' x ' mA .

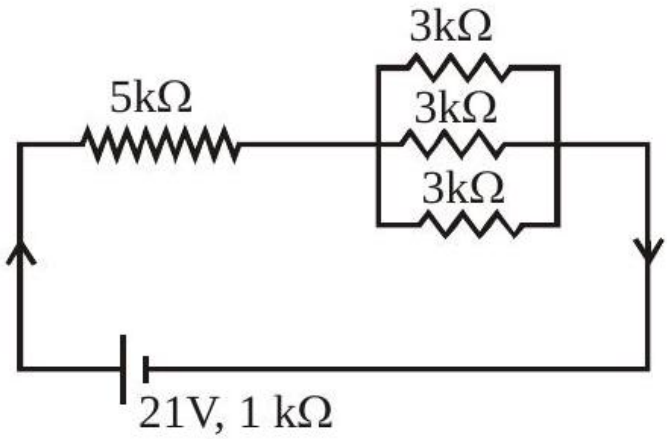

The value of x to the nearest integer is

.

Numerical answer: _____

Enter the requested value (an integer; 0 decimal places). Use the units and scaling stated in the question.

Correct answer: 3

Source solution

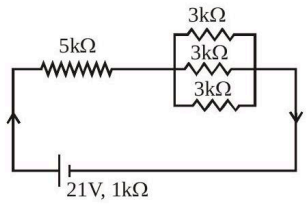

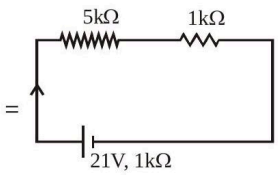

$\mathrm{I}=\frac{21}{5+1+1}=3\ \mathrm{mA}$

Question 169

A uniform conducting wire of length is 24 a , and resistance R is wound up as a current carrying coil in the shape of an equilateral triangle of side ' a ' and then in the form of a square of side ' a '. The coil is connected to a voltage source $\mathrm{V_0}$. The ratio of magnetic moment of the coils in case of equilateral triangle to that for square is $1:\sqrt{y}$ where y is

Numerical answer: _____

Enter the requested value (an integer; 0 decimal places). Use the units and scaling stated in the question.

Correct answer: 3

Source solution

In triangle shape $\mathrm{N_t}=\frac{24\mathrm{a}}{3\mathrm{a}}=8$
In square $N_s=\frac{24a}{4a}=6$
$\frac{M_t}{M_3}=\frac{N_tIA_t}{N_sIA_s}$ [I will be same in both]
$=\frac{8\times\frac{\sqrt{3}}{4}\times\mathrm{a}^2}{6\times\mathrm{a}^2}$
$\frac{\mathrm{M_t}}{\mathrm{M_s}}=\frac{1}{\sqrt{3}}$
$y=3$

Question 170

In the given circuit, the current flowing through the resistance $\mathbf{20\Omega}$ is 0.3 A , while the ammeter reads 0.9 A . The value of $\mathbf{R_1}$ is Ω.

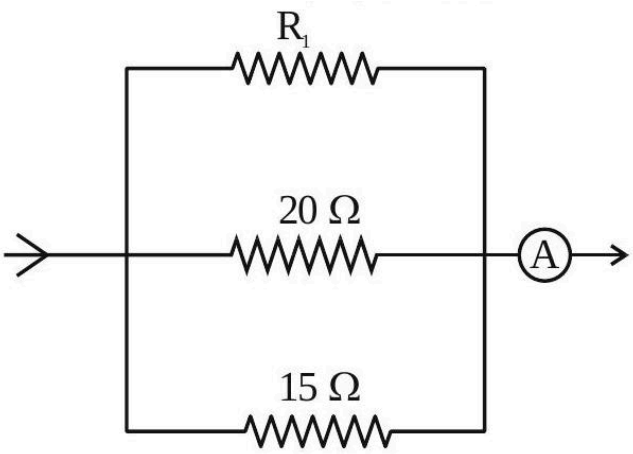

Numerical answer: _____

Enter the requested value (an integer; 0 decimal places). Use the units and scaling stated in the question.

Correct answer: 30

Source solution

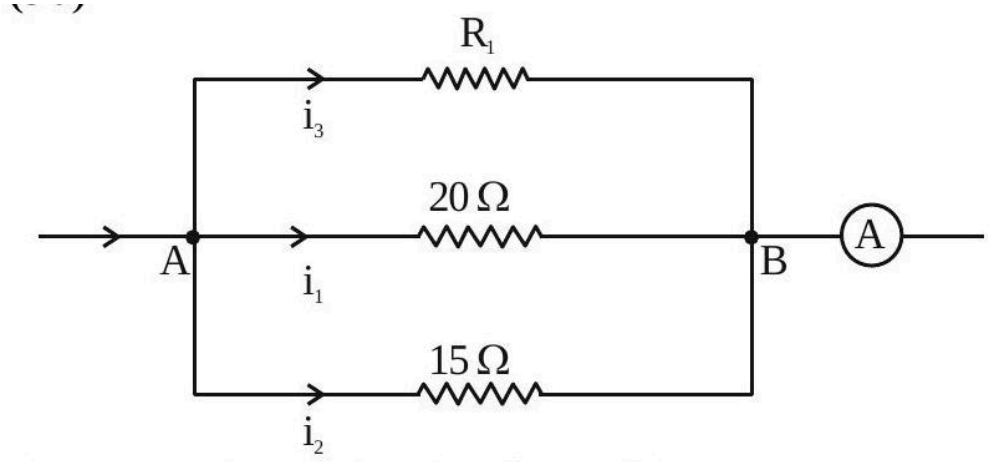

Given, $i_1 = 0.3\ \mathrm{A}, i_1 + i_2 + i_3 = 0.9\ \mathrm{A}$

So, $\mathrm{V_{AB}} = \mathrm{i_1} \times 20\Omega = 20 \times 0.3\ \mathrm{V} = 6\ \mathrm{V}$

$\mathrm{i_2} = \frac{6\ \mathrm{V}}{15\Omega} = \frac{2}{5}\ \mathrm{A}$

$\mathrm{i_1} + \mathrm{i_2} + \mathrm{i_3} = \frac{9}{10}\ \mathrm{A}$

$\frac{3}{10}+\frac{2}{5}+\mathrm{i}_3=\frac{9}{10}$
$\frac{7}{10}+\mathrm{i}_3=\frac{9}{10}$
$\mathrm{i}_3=0.2\ \mathrm{A}$
So, $\mathrm{i}_3 \times \mathrm{R}_1=6\ \mathrm{V}$
$(0.2)\ \mathrm{R}_1=6$
$\mathrm{R}_1=\frac{6}{0.2}=30\Omega$

Question 171

First, a set of n equal resistors of 10Ω each are connected in series to a battery of emf 20 V and internal resistance 10Ω. A current I is observed to flow. Then, the n resistors are connected in parallel to the same battery. It is observed that the current is increased 20 times, then the value of n is

Numerical answer: _____

Enter the requested value (an integer; 0 decimal places). Use the units and scaling stated in the question.

Correct answer: 20

Source solution

In series
$\mathrm{R}_{\mathrm{eq}}=\mathrm{nR}=10\mathrm{n}$
$\mathrm{i}_{\mathrm{s}}=\frac{20}{10+10\mathrm{n}}=\frac{2}{1+\mathrm{n}}$
in parallel
$\mathrm{R}_{\mathrm{eq}}=\frac{10}{\mathrm{n}}$
$\mathrm{i}_{\mathrm{p}}=\frac{20}{\frac{10}{\mathrm{n}}+10}=\frac{2\mathrm{n}}{1+\mathrm{n}}$
$\frac{i_p}{i_s}=20$
$\frac{\left(\frac{2n}{1+n}\right)}{\left(\frac{2}{1+n}\right)}=20$
$\mathrm{n}=20$

Question 172

A resistor dissipates 192 J of energy in 1 s when a current of 4A is passed through it. Now, when the current is doubled, the amount of thermal energy dissipated in 5 s in J.

Numerical answer: _____

Enter the requested value (an integer; 0 decimal places). Use the units and scaling stated in the question.

Correct answer: 3840

Source solution

$$E = i^2Rt$$
$$192 = 16(\mathrm{R})(1)$$
$$\mathrm{R} = 12\Omega$$
$$\mathrm{E}^1 = (8)^2(12)(5)$$
$$= 3840\ \mathrm{J}$$

Question 173

A wire of length 25 m and cross-sectional area $5\ \mathrm{mm}^2$ having resistivity of $2 \times 10^{-6}\Omega\ \mathrm{m}$ is bent into a complete circle. The resistance between diametrically opposite points will be

A. 12.5Ω

B. 50Ω

C. 100Ω

D. $2.5\ \Omega$

This question was incorrect in the original exam paper and ALLEN marked it BONUS because the correct value was missing from the options. For practice, option 4 has been corrected from 25 ohm to 2.5 ohm. Select the correct option.

Correct answer: D

Source solution

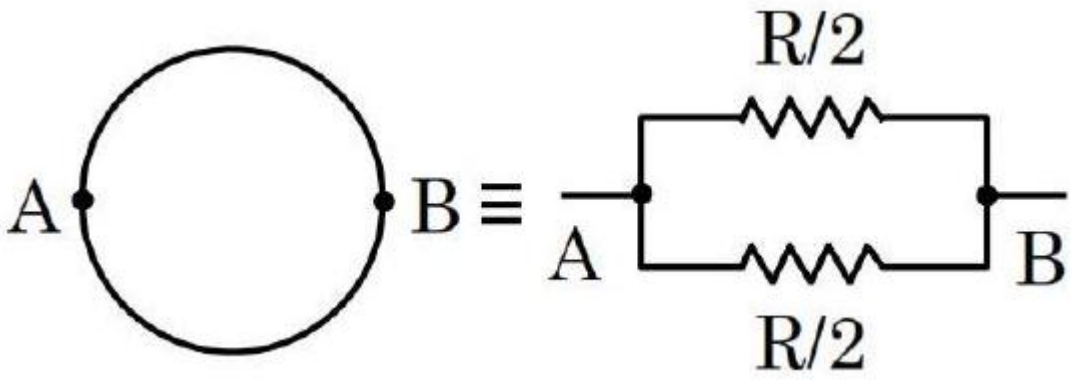

$$\mathrm{L} = 25\ \mathrm{m},\ \mathrm{A} = 5\ \mathrm{mm}^2 = 5 \times 10^{-6}\ \mathrm{m}^2$$
$$\rho = 2 \times 10^{-6}\Omega\ \mathrm{m}$$
$$\mathrm{R}_{\mathrm{wire}} = \frac{\rho \mathrm{L}}{\mathrm{A}} = \frac{2 \times 10^{-6} \times 25}{5 \times 10^{-6}} = 10$$
$$\mathrm{R}_{\mathrm{eq}} = \frac{\mathrm{R}}{4} = \frac{10}{4} = 2.5\Omega$$

The full wire resistance is 10 ohm. Each semicircle has resistance 5 ohm; the two semicircles are in parallel, giving 2.5 ohm. In this corrected practice version, option 4 has been replaced with 2.5 ohm.

Question 174

The voltage drop across 15Ω resistance in the given figure will be V.

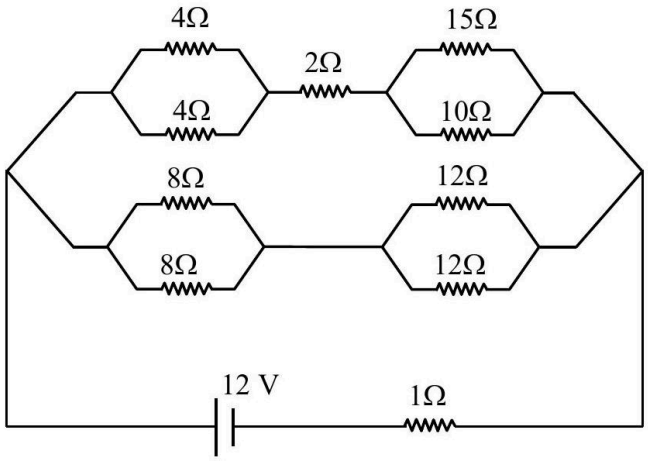

Numerical answer: _____

Enter the requested value (an integer; 0 decimal places). Use the units and scaling stated in the question.

Correct answer: 6

Source solution

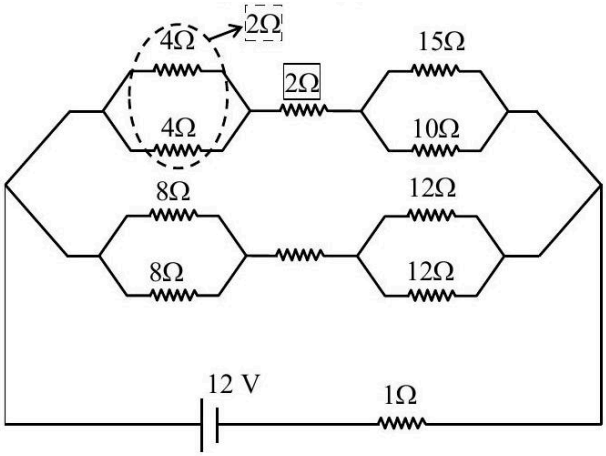

⇒ effective circuit diagram will be

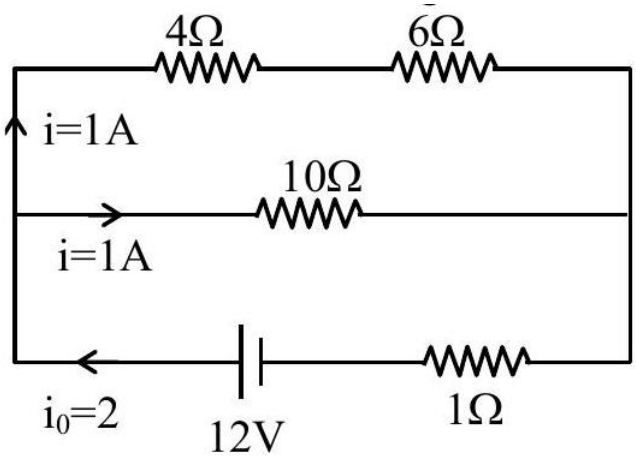

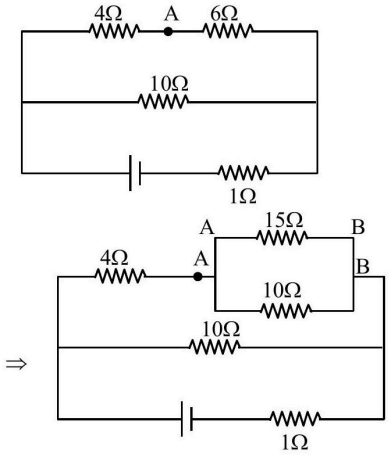

Point drop across $6\Omega = 1 \times 6 = 6 = V_{AB}$

$\Rightarrow$ Hence point drop across $15\Omega = 6$ volt $= V_{AB}$

Question 175

A wire of length 10 cm and radius $\sqrt{7} \times 10^{-4}\ \mathrm{m}$ connected across the right gap of a meter bridge. When a resistance of 4.5Ω is connected on the left gap by using a resistance box, the balance length is found to be at 60 cm from the left end. If the resistivity of the wire is $\mathrm{R} \times 10^{-7} \Omega\ \mathrm{m}$, then value of R is :

A. 63

B. 70

C. 66

D. 35

Correct answer: C

Source solution

For the null point,

$$\frac{4.5}{60} = \frac{R}{40}$$

Also,

$$R = \frac{p\ell}{A} = \frac{p\ell}{\pi r^2}$$

$$4.5 \times 40 = \rho \times \frac{0.1}{\pi \times 7 \times 10^{-8}} \times 60$$

$$\rho = 66 \times 10^{-7}\ \Omega \cdot \mathrm{m}$$

Question 176

A $\mathbf{220\ V, 50\ Hz}$ AC source is connected to a 25 V , 5 W lamp and an additional resistance R in series (as shown in figure) to run the lamp at its peak brightness, then the value of R (in ohm) will be

.

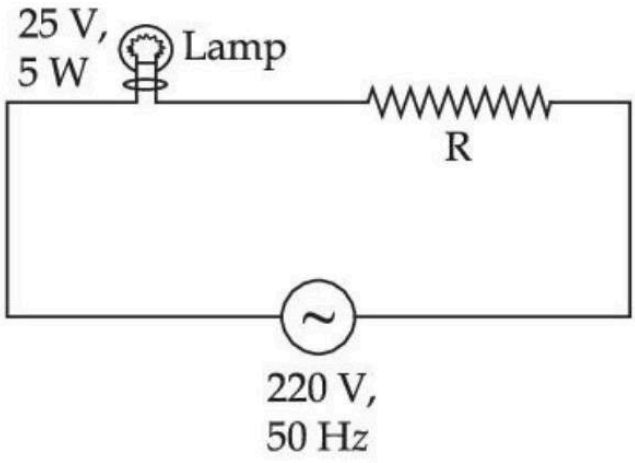

Numerical answer: _____

Enter the requested value (an integer; 0 decimal places). Use the units and scaling stated in the question.

Correct answer: 975

Source solution

$$\mathbf{P = Vi}$$
$$\mathbf{5 = 25i}$$
$$i = \tfrac{1}{5}$$
$$V_R = iR$$
$$(220 - 25) = \tfrac{1}{5}R$$
$$R = 195 \times 5 = 975\Omega$$

Question 177

Two identical cells each of emf 1.5 V are connected in parallel across a parallel combination of two resistors each of resistance 20Ω. A voltmeter connected in the circuit measures 1.2 V . The internal resistance of each cell is

A. 2.5Ω

B. 4Ω

C. 5Ω

D. 10Ω

Correct answer: C

Source solution

$$\mathrm{V}=\mathrm{E}-\frac{\mathrm{i}r}{2}$$

$$1.2=1.5-\mathrm{i}\left(\frac{r}{2}\right)$$

$$\mathrm{i}\frac{r}{2}=0.3$$

$$\mathrm{i}=\frac{1.5}{10+\frac{r}{2}} \Rightarrow 10\mathrm{i}+\frac{\mathrm{i}r}{2}=1.5$$

$$10\mathrm{i}=1.5-0.3$$

$$\mathrm{i}=0.12\,\mathrm{A}$$

$$\Rightarrow r=\frac{0.6}{0.12}=5\,\Omega$$

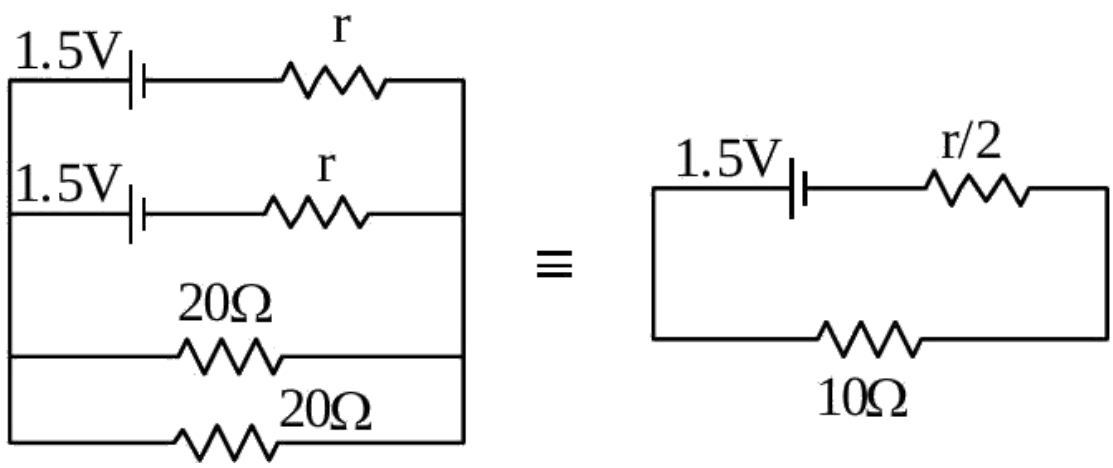
1.5V
r
1.5V
r
20Ω
20Ω
≡
1.5V
r/2
10Ω

Question 178

A potentiometer wire of length 10 m and resistance 20Ω is connected in series with a 25 V battery and an external resistance 30Ω. A cell of emf E in secondary circuit is balanced by 250 cm long potentiometer wire. The value of E (in volt) is $\frac{x}{10}$. The value of x is .

Numerical answer: _____

Enter the requested value (an integer; 0 decimal places). Use the units and scaling stated in the question.

Correct answer: 25

Source solution

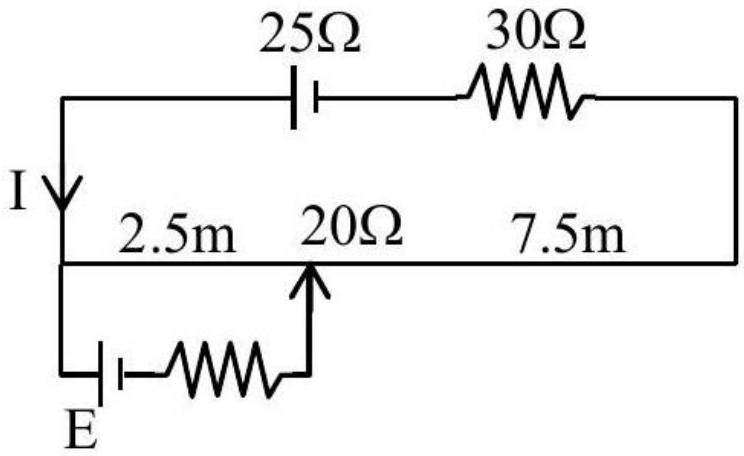

$I = \frac{25}{50} = \frac{1}{2}A$
$\therefore \Delta V = 10\ V$
$10\ m \rightarrow 10\ V$
$2.5\ m \rightarrow 2.5\ V$

Question 179

All resistances in figure are 1Ω each. The value of current ' I ' is $\frac{a}{5}$ A. The value of a is

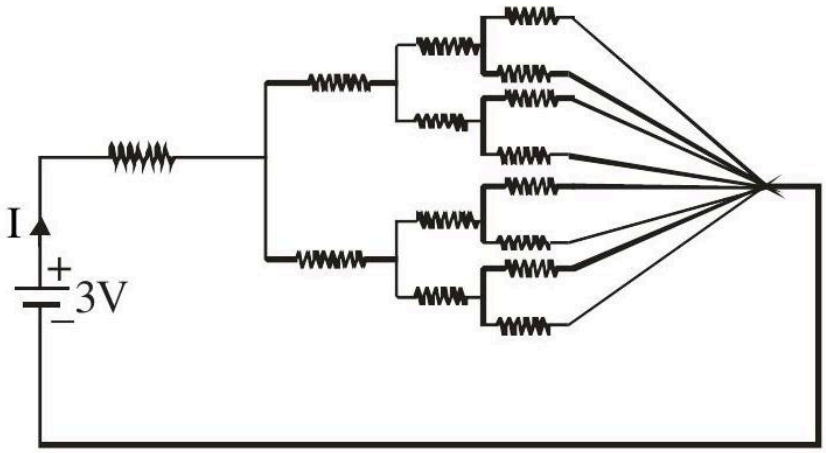

Numerical answer: _____

Enter the requested value (an integer; 0 decimal places). Use the units and scaling stated in the question.

Correct answer: 8

Source solution

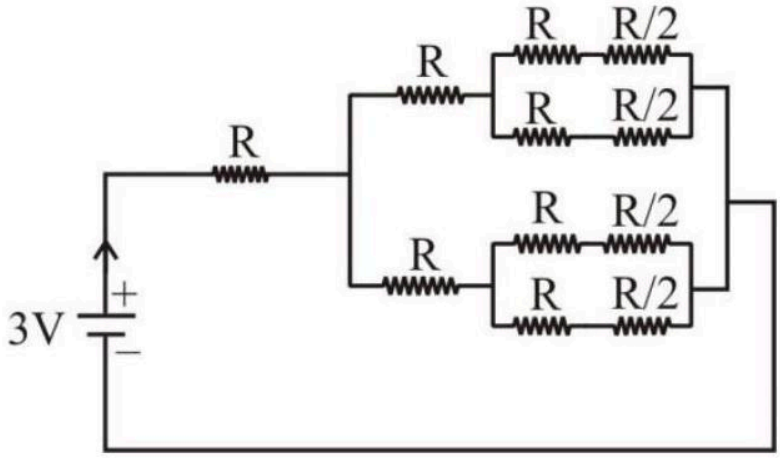

$R_{eq} = \frac{15R}{8} = \frac{15}{8}\Omega$

$I = \frac{3}{\frac{15}{8}} = \frac{8}{5}A$

$\therefore \quad a = 8$

Question 180

A $\mathbf{110\ V, 50\ Hz, AC}$ source is connected in the circuit (as shown in figure). The current through the resistance $\mathbf{55\Omega}$, at resonance in the circuit, will be A.

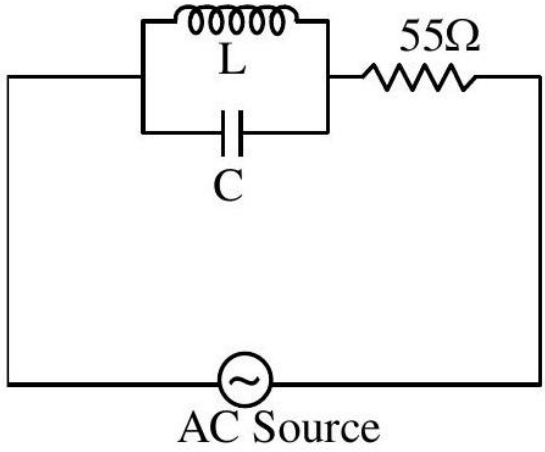

Numerical answer: _____

Enter the requested value (an integer; 0 decimal places). Use the units and scaling stated in the question.

Correct answer: 0

Source solution

At resonance $I_L = I_C$

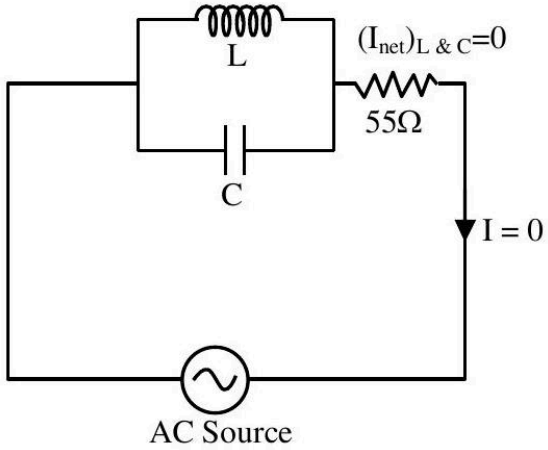

Alternatively,

$$\frac{1}{Z} = \sqrt{\left(\frac{1}{X_L} - \frac{1}{X_C}\right)^2}$$

At resonance, $X_L = X_C \& Z \to \infty$
$\therefore Z_{\text{total circuit}} \to \infty$ i.e, $I = 0$

Ans. 0

Question 181

Current measured by the ammeter (A) in the reported circuit when no current flows through 10Ω resistance. will be A.

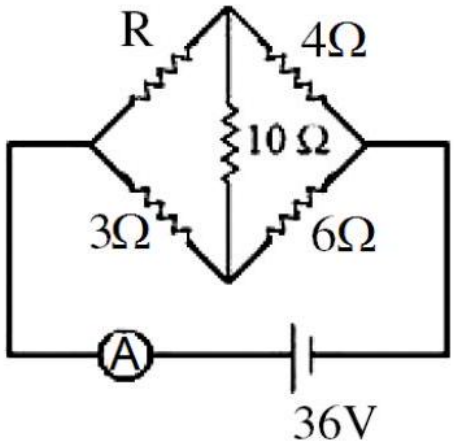

Numerical answer: _____

Enter the requested value (an integer; 0 decimal places). Use the units and scaling stated in the question.

Correct answer: 10

Source solution

Using the condition of a balanced wheat stone bridge,
$\Rightarrow \frac{R}{3} = \frac{4}{6} \Rightarrow R = 2\Omega$
So the effective resistance of the circuit is
$R_{eq} = \frac{6\times9}{6+9} = \frac{18}{5}\Omega$
$i = \frac{36}{R_{eq}} = 10\ A$

Question 182

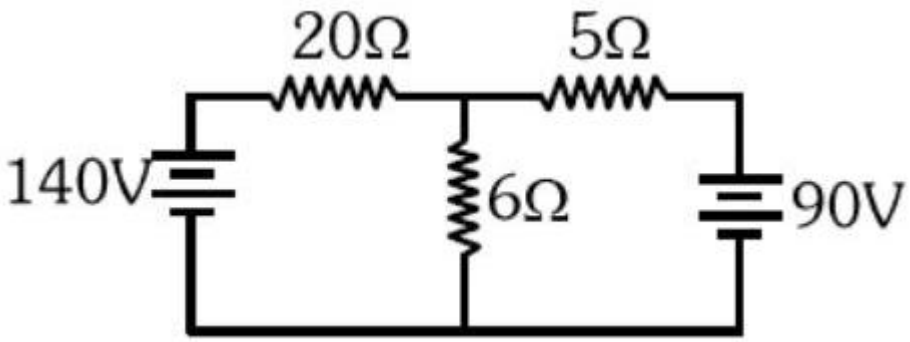

The value of current in the 6Ω resistance is:

A. 4A

B. 8A

C. 10A

D. 6A

Correct answer: C

Source solution

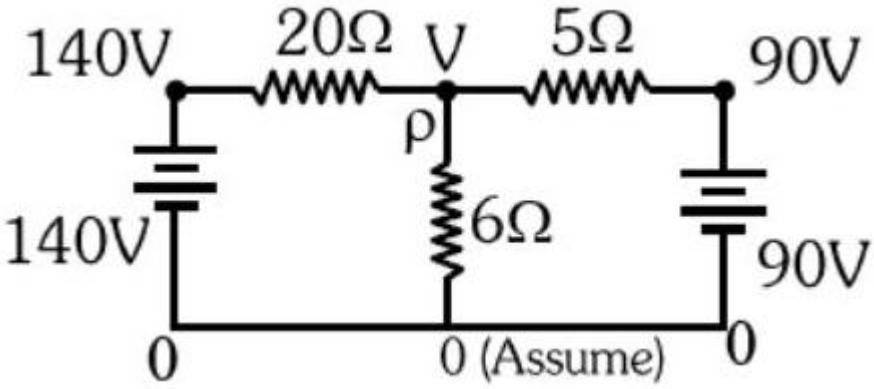

Applying KCL at point P,

$$\frac{V-0}{6}+\frac{V-90}{5}+\frac{v-140}{20}=0$$
$$\Rightarrow 10V+12V-1080+3v-420=0$$
$$\Rightarrow V=60$$

$\therefore$ current in $6\Omega=\frac{V-0}{6}=10\ A$ hence option 3.

Question 183

In the given circuit ' a ' is an arbitrary constant. The value of m for which the equivalent circuit resistance is minimum, will be $\sqrt{\frac{x}{2}}$. The value of x is .

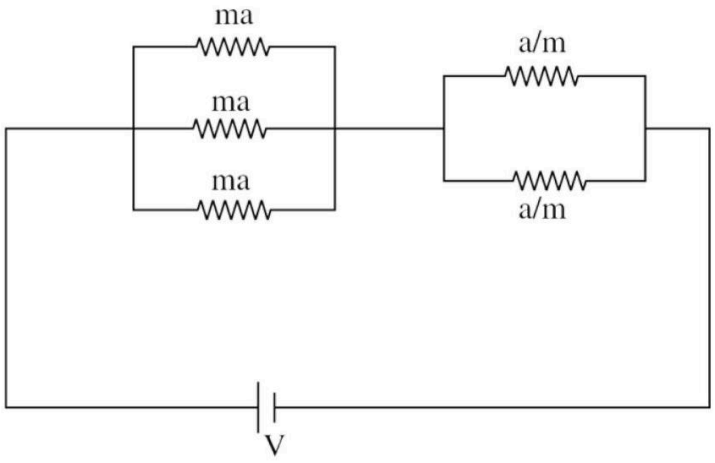

Numerical answer: _____

Enter the requested value (an integer; 0 decimal places). Use the units and scaling stated in the question.

Correct answer: 3

Source solution

$$\mathrm{R} = \left(\frac{\mathrm{ma}}{3}\right) + \left(\frac{\mathrm{a}}{2\,\mathrm{m}}\right)$$
$$\frac{\mathrm{dR}}{\mathrm{dm}} = \frac{\mathrm{a}}{3} - \frac{\mathrm{a}}{2\,\mathrm{m}^2} = 0$$
$$\frac{a}{3} = \frac{a}{2m^2}$$
$$\mathrm{m}^2 = \frac{3}{2}$$
$$\mathrm{m} = \sqrt{\frac{3}{2}}$$
$$\mathrm{x} = 3$$

Question 184

A wire of resistance 160Ω is melted and drawn in wire of one-fourth of its length. The new resistance of the wire will be

A. 10Ω

B. 640Ω

C. 40Ω

D. 16Ω

Correct answer: A

Source solution

Volume $=$ Constant $\quad A_1L_1 = A_2L_2 \quad A_1L = A_2\frac{L}{4} \quad 4A_1 = A_2$

$$R_1 = \frac{\rho L_1}{A_1} \quad R_2 = \frac{\rho L_2}{A_2}$$
$$\frac{R_2}{R_1} = \frac{L_2A_1}{A_2L_1} = \frac{L}{4}\frac{A_1}{4A_1L}$$
$$R_2 = \frac{1}{16}R_1 = 10\,\Omega$$

Question 185

A 1 m long metal rod XY completes the circuit as shown in figure. The plane of the circuit is perpendicular to the magnetic field of flux density 0.15 T . If the resistance of the circuit is 5Ω, the force needed to move the rod in direction, as indicated, with a constant speed of $4\ \mathrm{m/s}$ will be

10^{-3} N.

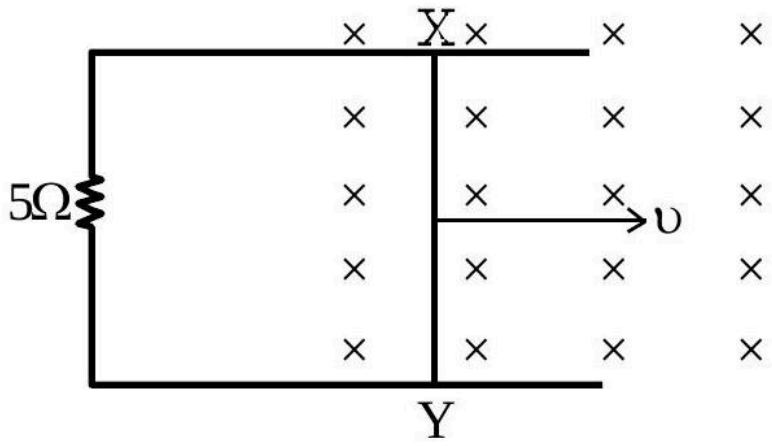

Numerical answer: _____

Enter the requested value (an integer; 0 decimal places). Use the units and scaling stated in the question.

Correct answer: 18

Source solution

$$\mathrm{F} = \mathrm{i}\ell\mathrm{B}$$
$$= \left(\frac{\varepsilon}{\mathrm{R}}\right)\ell\mathrm{B} = \left(\frac{\mathrm{vB}\ell}{\mathrm{R}}\right)\ell\mathrm{B} = \frac{\mathrm{vB}^2\ell^2}{\mathrm{R}} = \frac{4}{5} \times \left(\frac{15}{100}\right)^2 \times 1^2$$
$$= \frac{4}{5} \times \frac{225}{10^4}$$
$$= \frac{180}{10^4} = 0.018\ \mathrm{N}$$
$$= 18 \times 10^{-3}\ \mathrm{N}$$

Question 186

The equivalent resistance of the circuit shown below between points a and b is :

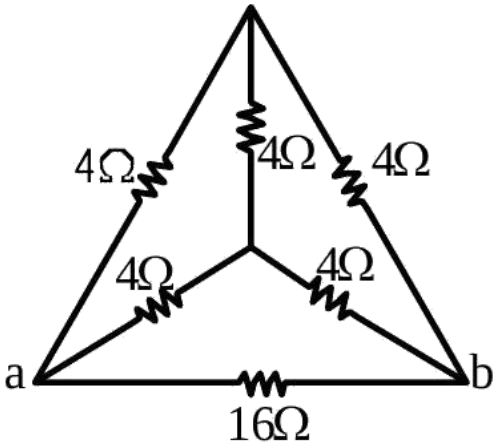

A. 24Ω

B. 3.2Ω

C. 20Ω

D. 16Ω

Correct answer: B

Source solution

The circuit can be reduced to

$$R_{eq} = \frac{16 \cdot 4}{16 + 4} = \frac{64}{20} = \frac{16}{5}\,\Omega = 3.2\,\Omega$$

Question 187

The value of net resistance of the network as shown in the given figure is :

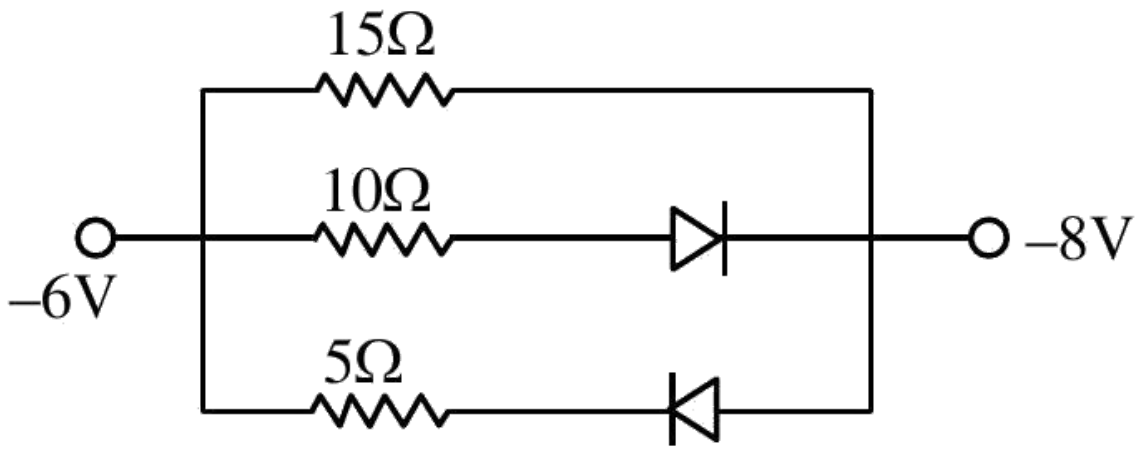

A. $\left(\frac{5}{2}\right)\Omega$

B. $\left(\frac{15}{4}\right)\Omega$

C. 6Ω

D. $\left(\frac{30}{11}\right)\Omega$

Correct answer: C

Source solution

Diode 2 is in reverse bias, so current will not flow in the branch of the 2nd diode. Thus, we can assume it to be a broken wire. Diode 1 is in forward bias, so it will behave like a conducting wire. The new circuit will be

$$R_{\text{eq}} = \frac{15 \cdot 10}{15 + 10} = \frac{15 \cdot 10}{25} = 6\,\Omega$$

Correct answer (3)

Question 188

The equivalent resistance between A and B is:

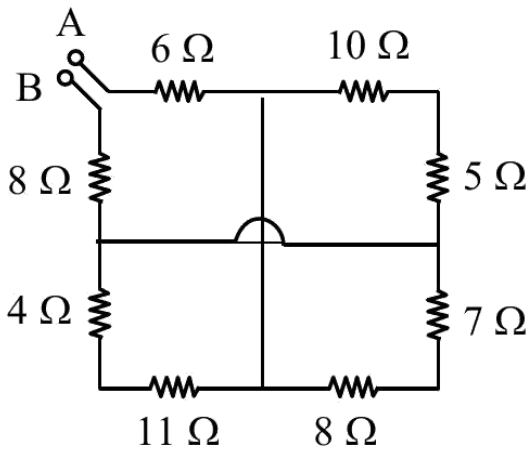

A. 18Ω

B. 25Ω

C. 27Ω

D. 19Ω

Correct answer: D

Source solution

Sol. $\Rightarrow \mathbf{R_{eq}} = 6\,\Omega + 5\,\Omega + 8\,\Omega = 19\,\Omega$

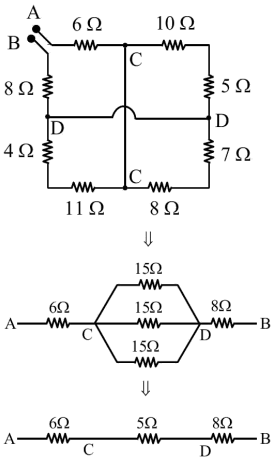

Question 189

The value of unknown resistance (x) for which the potential difference between B and D will be zero in the arrangement shown, is :

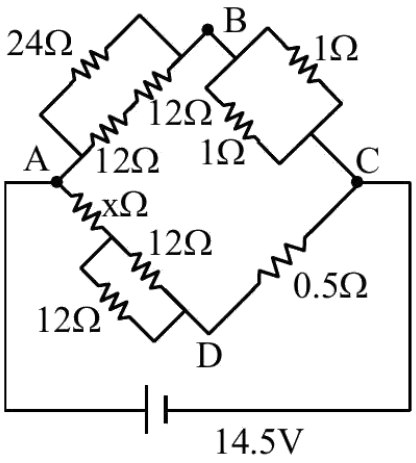

A. 3Ω

B. 9Ω

C. 6Ω

D. 42Ω

Correct answer: C

Source solution

In case of balanced Wheatstone Bridge

$$\frac{V_{AB}}{V_{AD}} = \frac{V_{BC}}{V_{CD}} \Rightarrow \frac{12}{6+x} = \frac{0.5}{0.5}$$

$x = 6\,\Omega$

Question 190

A wire of resistance 20Ω is divided into 10 equal parts. A combination of two parts are connected in parallel and so on. Now resulting pairs of parallel combination are connected in series. The equivalent resistance of final combination is

Ω.

Numerical answer: _____

Enter the requested value (an integer; 0 decimal places). Use the units and scaling stated in the question.

Correct answer: 5

Source solution

$$\frac{20\Omega}{\square} \Rightarrow 10 \text{ equal part}$$

Each part has resistance $= 2\Omega$

2 parts are connected in parallel so, $R = 1\Omega$

Now, there will be 5 parts each of resistance 1Ω, they are connected in series.

$R_{eq} = 5R, R_{eq} = 5\Omega$

Question 191

A square loop PQRS having 10 turns, area $3.6\times 10^{-3}\ \mathrm{m}^2$ and resistance 100Ω is slowly and uniformly being pulled out of a uniform magnetic field of magnitude $\mathrm{B}=0.5\ \mathrm{T}$ as shown. Work done in pulling the loop out of the field in 1.0 s is

$\times 10^{-6}\ \mathrm{J}$.

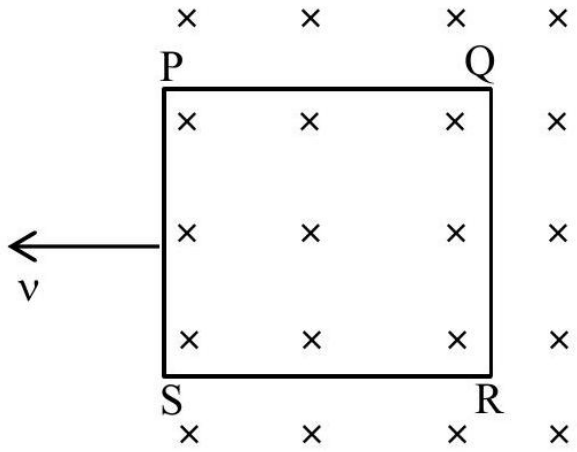

Numerical answer: _____

Enter the requested value (an integer; 0 decimal places). Use the units and scaling stated in the question.

Correct answer: 3

Source solution

$\in = \mathrm{NB}\ell\mathrm{v}$

$i = \frac{\epsilon}{R} = \frac{NB\ell v}{R}$

$\mathrm{F} = \mathrm{N}(\mathrm{i}\ell\mathrm{B}) = \frac{\mathrm{N}^2\,\mathrm{B}^2\ell^2\mathrm{v}}{\mathrm{R}}$

$\mathrm{W} = \mathrm{F}\times\ell = \frac{\mathrm{N}^2\,\mathrm{B}^2\ell^3}{\mathrm{R}}\left(\frac{\ell}{\mathrm{t}}\right)$

$\mathrm{A} = \ell^2$

$\mathrm{W} = \frac{(10\times 10)(0.5)^2\times\left(3.6\times 10^{-3}\right)^2}{100\times 1}$

$\mathrm{W} = 3.24\times 10^{-6}\ \mathrm{J}$

Question 192

If n represents the actual number of deflections in a converted galvanometer of resistance G and shunt resistance S . Then the total current I when its figure of merit is K will be :

A. $\frac{KS}{(S+G)}$

B. $\frac{(G+S)}{nKS}$

C. $\frac{nKS}{(G+S)}$

D. $\frac{nK(G+S)}{S}$

Correct answer: D

Source solution

$$\text{Figure of merit } \frac{I_g}{\theta} = K$$

$$I_g = Kn$$

$$I = \frac{I_g}{S}(G+S)$$

$$I = \frac{nK}{S}(G+S)$$

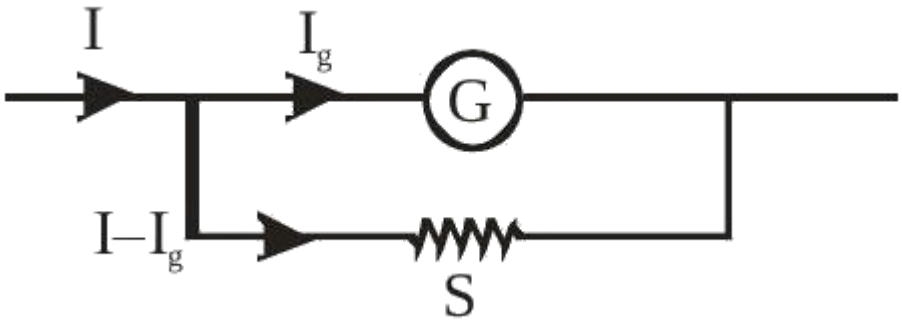

Moving Charges and Magnetism

Questions 193-207 / 15 selected / 5.0% practice weight / Focus first

Question 193

A solenoid of 1200 turns is wound uniformly in a single layer on a glass tube 2 m long and 0.2 m in diameter. The magnetic intensity at the center of the solenoid when a current of 2 A flows through it is?

A. $2.4 \times 10^3\ \mathrm{A\,m^{-1}}$

B. $1.2 \times 10^3\ \mathrm{A\,m^{-1}}$

C. $2.4 \times 10^{-3}\ \mathrm{A\,m^{-1}}$

D. $1\ \mathrm{A\,m^{-1}}$

Correct answer: B

Source solution

Sol.

For a long solenoid,

$$B = \mu_0 n I.$$

Given that the magnetic induction is $2B$,

$$2B = \mu_0 n I.$$

Number of turns per unit length:

$$n = \frac{1200}{2} = 600\ \mathrm{m^{-1}}.$$

Magnetic field intensity is

$$H = \frac{B}{\mu_0} = nI.$$

Substituting,

$$H = 600 \times 2.$$

$$H = 1200\ \text{A m}^{-1}.$$

$$\boxed{H = 1.2 \times 10^{3}\ \text{A m}^{-1}}$$

Question 194

A particle of charge q , mass m and kinetic energy E enters in magnetic field perpendicular to its velocity and undergoes a circular arc of radius(r). Which of the following curves represents the variation of r with E ?

A.

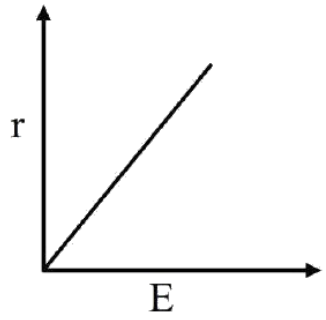

B.

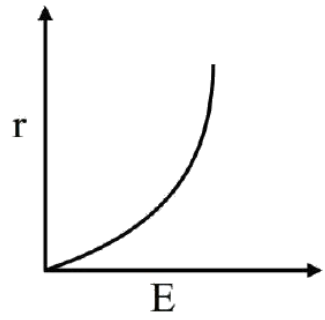

C.

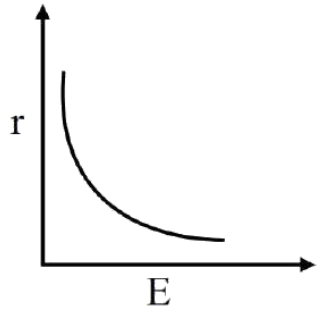

D.

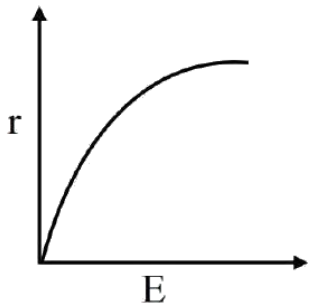

Correct answer: D

Source solution

Sol.

$$\frac{mv^2}{r} = qvB$$

$$mv = qBr$$

$$E = \frac{1}{2}mv^2$$

$$E = \frac{1}{2}m\left(\frac{q^2B^2r^2}{m^2}\right) = \frac{q^2B^2r^2}{2m}$$

$$E = \left(\frac{q^2B^2}{2m}\right)r^2$$

$$r^2 \propto E$$

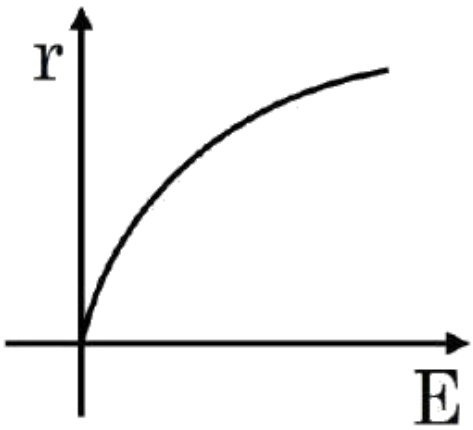

Question 195

Two particles X and Y having equal charges are being accelerated through the same potential difference. Thereafter they enter normally in a region of uniform magnetic field and describes circular paths of radii R_1 and R_2 respectively. The mass ratio of X and Y is :

A. $\left(\frac{R_2}{R_1}\right)^2$

B. $\left(\frac{R_1}{R_2}\right)^2$

C. $\left(\frac{R_1}{R_2}\right)$

D. $\left(\frac{R_2}{R_1}\right)$

Correct answer: B

Source solution

$$R = \frac{mv}{qB} = \frac{p}{qB} = \frac{\sqrt{2m \cdot KE}}{qB} = \frac{\sqrt{2mqV}}{qB}$$

$R \propto \sqrt{m}$

$m \propto R^2$

$$\frac{m_1}{m_2} = \left(\frac{R_1}{R_2}\right)^2$$

Question 196

Two long parallel wires X and Y, separated by a distance of 6 cm , carry currents of 5 A and 4 A , respectively, in opposite directions as shown in the figure. Magnitude of the resultant magnetic field at point P at a distance of 4 cm from wire Y is $\mathbf{x} \times 10^{-5}$ T. The value of x is . Take permeability of free space as $\mu_0 = 4\pi \times 10^{-7}$ SI units.

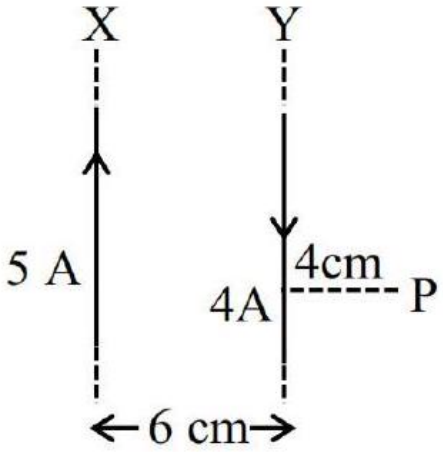

Numerical answer: _____

Enter the requested value (an integer; 0 decimal places). Use the units and scaling stated in the question.

Correct answer: 1

Source solution

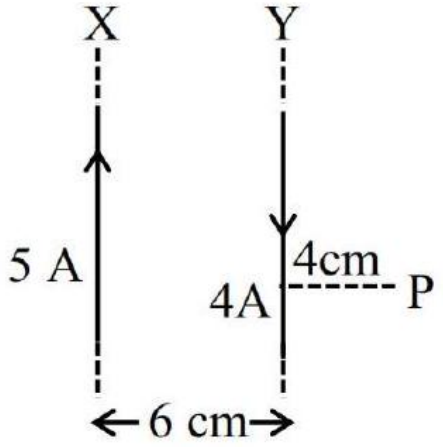

$\mathrm{B} = \frac{\mu_0(5)}{2\pi \times .01} - \frac{\mu_0 4}{2\pi \times 0.04}$
$= -\frac{100\mu_0}{4\pi}$

$= -100 \times 10^{-7}$
$= -1 \times 10^{-5}\ \mathrm{T}$

Question 197

A sing1y ionized magnesium atom (A24) ion is accelerated to kinetic energy 5 keV and is projected perpendicularly into a magnetic field B of the magnitude 0.5 T . The radius of path formed will be cm.

Numerical answer: _____

Enter the requested value (an integer; 0 decimal places). Use the units and scaling stated in the question.

Correct answer: 10

Source solution

$\mathrm{R} = \frac{\mathrm{mv}}{\mathrm{qB}} = \frac{\sqrt{2\mathrm{mK}}}{\mathrm{qB}}$

Question 198

A 4.0 cm long straight wire carrying a current of 8 A is placed perpendicular to an uniform magnetic field of strength 0.15 T . The magnetic force on the wire is mN .

Numerical answer: _____

Enter the requested value (an integer; 0 decimal places). Use the units and scaling stated in the question.

Correct answer: 48

Source solution

$\mathrm{F} = \mathrm{I}\ell\mathrm{B}$
$= 8 \times \frac{4}{100} \times 0.15$
$= 48 \times 10^{-3}\ \mathrm{N} = 48\mathrm{mN}$

Question 199

A uniform magnetic field B exists in a direction perpendicular to the plane of a square loop made of a metal wire. The wire has a diameter of 4 mm and a total length of 30 cm . The magnetic field changes with time at a steady rate $\mathrm{dB/dt} = 0.032\mathrm{Ts}^{-1}$. The induced current in the loop is close to (Resistivity of the metal wire is $1.23 \times 10^{-8}\Omega\,\mathrm{m}$)

A. 0.53 A

B. 0.61 A

C. 0.34 A

D. 0.43 A

Correct answer: B

Source solution

$$\phi = \mathrm{BA}$$

$$E = \frac{d\phi}{dt} = \frac{A\,dB}{dt}$$

$$E = \ell^2 \frac{dB}{dt}$$

$$i = \frac{E}{R} = \frac{\ell^2}{\rho\ell}\frac{dB}{dt}A$$

$$i = -\frac{30}{4} \times \frac{30}{4} \times \frac{10^{-4} \times 0.032 \times 4 \times 10^{-6} \times \pi}{1.23 \times 10^{-8} \times 30 \times 10^{-2} \times 10^{3}}$$

$$i = \frac{240\pi \times 10^{-10}}{1.23 \times 10^{-7}}$$

$$i = \frac{240 \times 3.14 \times 10^{-3}}{1.23} = \frac{753.6}{1.23} \times 10^{-3}$$

$$i = 612.68 \times 10^{-3} = 0.61\,\mathrm{A}$$

Question 200

A moving coil galvanometer has 100 turns and each turn has an area of $2.0\ \mathrm{cm}^2$. The magnetic field produced by the magnet is 0.01 T and the deflection in the coil is 0.05 radian when a current of 10 mA is passed through it. The torsional constant of the suspension wire is $x \times 10^{-5}\ \mathrm{N-m/rad}$. The value of x is

.

Numerical answer: _____

Enter the requested value (an integer; 0 decimal places). Use the units and scaling stated in the question.

Correct answer: 4

Source solution

$\tau = \mathrm{BINA}\sin\phi$

$\mathrm{C}\theta = \mathrm{BINA}\sin 90^\circ$

$\mathrm{C} = \frac{\mathrm{BINA}}{\theta} = \frac{0.01\times 10\times 10^{-3}\times 100\times 2\times 10^{-4}}{0.05}$

$= 4 \times 10^{-5}\ \mathrm{N-m/rad}.$

$\mathrm{x} = 4$

Question 201

A straight wire AB of mass 40 g and length 50 cm is suspended by a pair of flexible leads in uniform magnetic field of magnitude 0.40 T as shown in the figure. The magnitude of the current required in the wire to remove the tension in the supporting leads is A. (Take $\mathbf{g = 10\ ms^{-2}}$).

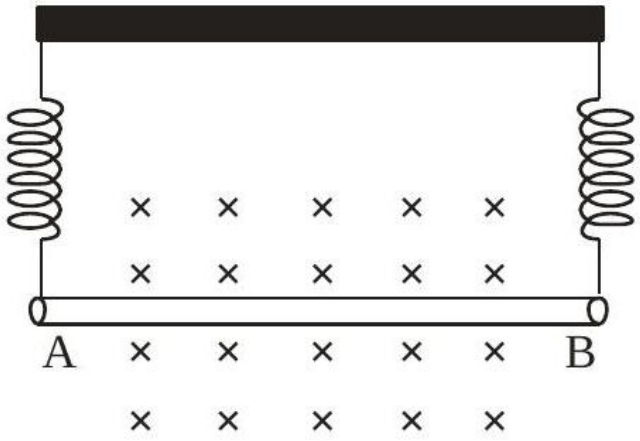

Numerical answer: _____

Enter the requested value (an integer; 0 decimal places). Use the units and scaling stated in the question.

Correct answer: 2

Source solution

For equilibrium

$\mathbf{Mg = I\ell B}$

$\mathbf{I = \frac{mg}{\ell B} = \frac{40\times10^{-3}\times10}{50\times10^{-2}\times0.4} = 2\ A}$

Question 202

An emf of 0.08 V is induced in a metal rod of length 10 cm held normal to a uniform magnetic field of 0.4 T , when moves with a velocity of:

A. $2\ \mathrm{ms}^{-1}$

B. $3.2\ \mathrm{ms}^{-1}$

C. $0.5\ \mathrm{ms}^{-1}$

D. $20\ \mathrm{ms}^{-1}$

Correct answer: A

Source solution

Sol.

Induced emf is

$$\mathcal{E} = Blv.$$

Given,

$$\mathcal{E} = 0.08\ \mathrm{V}, \quad B = 0.4\ \mathrm{T}, \quad l = \frac{10}{100} = 0.1\ \mathrm{m}.$$

Therefore,

$$0.08 = 0.4 \times 0.1 \times v.$$

$$v = \frac{0.08}{0.04} = 2\ \mathrm{m/s}.$$

$$\boxed{v = 2\ \mathrm{m/s}}$$

Question 203

A straight wire carrying a current of 14 A is bent into a semicircular are of radius 2.2 cm as shown in the figure. The magnetic field produced by the current at the centre (O) of the arc. is $\quad \times 10^{-4}\ \mathrm{T}$

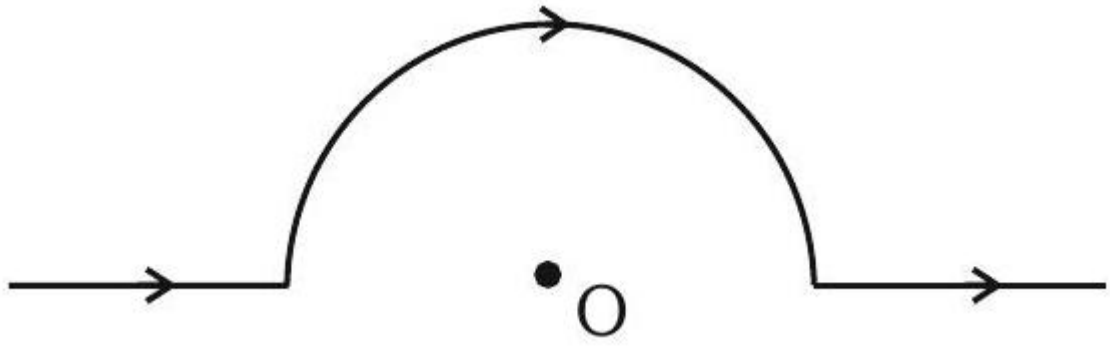

Numerical answer: _____

Enter the requested value (an integer; 0 decimal places). Use the units and scaling stated in the question.

Correct answer: 2

Source solution

$$B_{\text{at } O} = \frac{\mu_0 I}{4R} = \frac{4\pi \times 10^{-7} \times 14}{4 \times 2.2 \times 10^{-2}} = 2 \times 10^{-4}\ \mathrm{T}$$

Question 204

A coil having 100 turns, area of $5 \times 10^{-3}\ \mathrm{m}^2$, carrying current of 1 mA is placed in uniform magnetic field of 0.20 T such a way that plane of coil is perpendicular to the magnetic field. The work done in turning the coil through 90° is $\mu\mathrm{J}$.

Numerical answer: _____

Enter the requested value (an integer; 0 decimal places). Use the units and scaling stated in the question.

Correct answer: 100

Source solution

$$W = \Delta U = U_f - U_i$$
$$\mathrm{W} = (-\vec{\mu} \cdot \overrightarrow{\mathrm{B}})_{\mathrm{f}} - (-\vec{\mu} \cdot \overrightarrow{\mathrm{B}})_{\mathrm{i}}$$
$$= 0 + (\vec{\mu} \cdot \overrightarrow{\mathrm{B}})_{\mathrm{i}}$$
$$= \left(100 \times 5 \times 10^{-3} \times 1 \times 10^{-3}\right) \times 0.2\ \mathrm{J}$$
$$= 1 \times 10^{-4}\ \mathrm{J} = 100\mu\ \mathrm{J}$$

Question 205

The current sensitivity of a galvanometer can be increased by :
(A) decreasing the number of turns
(B) increasing the magnetic field
(C) decreasing the area of the coil
(D) decreasing the torsional constant of the spring

Choose the most appropriate answer from the options given below :

A. (B) and (C) only

B. (C) and (D) only

C. (A) and (C) only

D. (B) and (D) only

Correct answer: D

Source solution

$\mathrm{i} = \left(\frac{\mathrm{K}}{\mathrm{NAB}}\right)\theta$

$$\therefore \frac{\mathrm{d}\theta}{\mathrm{di}} = \frac{\mathrm{NAB}}{\mathrm{K}}$$

Question 206

Match List-I with List-II.

List-I	List-II
(A) Torque	(I) $\left[\mathrm{M}^1 \mathrm{L}^1 \mathrm{T}^{-2} \mathrm{A}^{-2}\right]$
(B) Magnetic field	(II) $\left[\mathrm{L}^2 \mathrm{A}^1\right]$
(C) Magnetic moment	(III) $\left[\mathrm{M}^1 \mathrm{T}^{-2} \mathrm{A}^{-1}\right]$
(D) Permeability of free space	(IV) $\left[\mathrm{M}^1 \mathrm{L}^2 \mathrm{T}^{-2}\right]$

Choose the correct answer from the options given below:

A. A-I, B-III, C-II, D-IV

B. A-IV, B-III, C-II, D-I

C. A-III, B-I, C-II, D-IV

D. A-IV, B-II, C-III, D-I

Correct answer: B

Source solution

Sol.

(A) Torque

$$\tau = \text{Force} \times \text{distance}$$

$$[\tau] = [MLT^{-2}]\,[L] = [ML^2T^{-2}]$$

$$\boxed{A \rightarrow (\text{IV})}$$

(B) Magnetic field

From

$$F = qvB,$$

$$[B] = \frac{[MLT^{-2}]}{[AT][LT^{-1}]} = [MT^{-2}A^{-1}]$$

$$\boxed{B \to (\text{III})}$$

(C) Magnetic moment

$$M = IA$$

$$[M] = [A][L^2] = [L^2A]$$

$$\boxed{C \to (\text{II})}$$

(D) Permeability of free space

From

$$B = \mu_0 nI,$$

$$[\mu_0] = \frac{[B]}{[n][I]} = \frac{[MT^{-2}A^{-1}]}{[L^{-1}][A]} = [MLT^{-2}A^{-2}]$$

$$\boxed{D \to (\text{I})}$$

Hence,

$$\boxed{A-\text{IV},\quad B-\text{III},\quad C-\text{II},\quad D-\text{I}}$$

Question 207

A current loop, having two circular arcs joined by two radial lines is shown in the figure. It carries a current of 10 A . The magnetic field at point O will be close to :

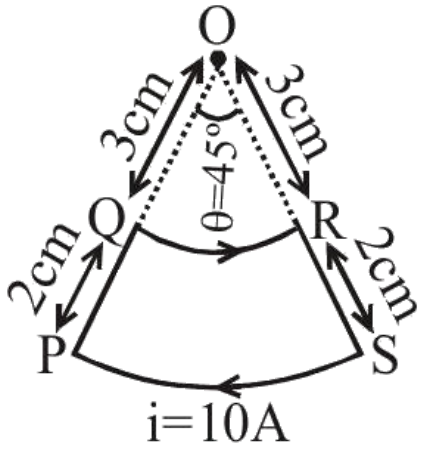

A. $1.0 \times 10^{-5}\ \mathrm{T}$

B. $1.5 \times 10^{-5}\ \mathrm{T}$

C. $1.0 \times 10^{-7}\ \mathrm{T}$

D. $1.0 \times 10^{-7}\ \mathrm{T}$

Correct answer: A

Source solution

Sol.

$$\vec{\mathrm{B}} = \frac{\mu_0 i}{4\pi}\theta\left[\frac{1}{r_1} - \frac{1}{r_2}\right]\hat{\mathrm{k}}$$

$$r_1 = 3\,\mathrm{cm} = 3 \times 10^{-2}\,\mathrm{m}$$

$$r_2 = 5\,\mathrm{cm} = 5 \times 10^{-2}\,\mathrm{m}$$

$$\theta = \frac{\pi}{4}, \quad i = 10\,\mathrm{A}$$

$$\Rightarrow \vec{\mathrm{B}} = \frac{4\pi \times 10^{-7}}{16} \times 10\left[\frac{1}{3 \times 10^{-2}} - \frac{1}{5 \times 10^{-2}}\right]\hat{\mathrm{k}}$$

$$\Rightarrow |\overrightarrow{B}| = \frac{\pi}{3} \times 10^{-5}\,\mathrm{T} \approx 1 \times 10^{-5}\,\mathrm{T}$$

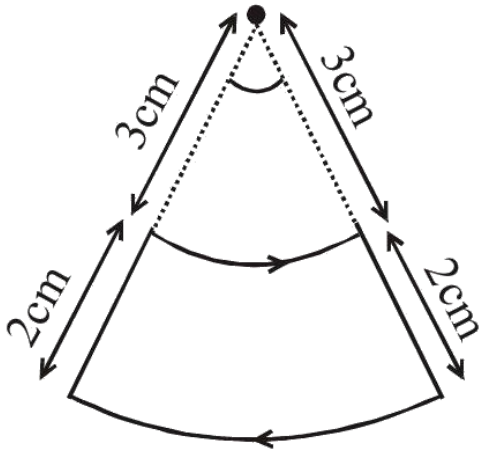

Electromagnetic Induction

Questions 208-224 / 17 selected / 5.7% practice weight / Focus first

Question 208

A transmitting station releases waves of wavelength 960 m . A capacitor of $256\mu\ \mathrm{F}$ is used in the resonant circuit. The self inductance of coil necessary for resonance is $\times 10^{-8}\mathrm{H}$.

Numerical answer: _____

Enter the requested value (an integer; 0 decimal places). Use the units and scaling stated in the question.

Correct answer: 10

Source solution

10

Since resonance

$\omega_r = \frac{1}{\sqrt{LC}}$

$\therefore 2\pi f = \frac{1}{\sqrt{LC}}$

$\therefore 4\pi^2 \frac{C^2}{\lambda^2} = \frac{1}{LC}$

$\therefore \frac{4\pi^2 \times 9 \times 10^8 \times 9 \times 10^8}{960 \times 960} = \frac{1}{L \times 2.56 \times 10^{-6}}$

$L = \frac{375 \times 960}{10^{-6} \times 4 \times \pi^2 \times 9 \times 10^{16}} = \frac{10^3}{10^{10}}$

$= 10^{-7}\mathrm{H}$

$= 10 \times 10^{-8}$

Question 209

A square loop of area $25\ \mathrm{cm}^2$ has a resistance of 10Ω. The loop is placed in uniform magnetic field of magnitude 40.0 T. The plane of loop is perpendicular to the magnetic field. The work done in pulling the loop out of the magnetic field slowly and uniformly in 1.0 sec , will be

A. $1.0 \times 10^{-3}\ \mathrm{J}$

B. $2.5 \times 10^{-3}\ \mathrm{J}$

C. $5 \times 10^{-3}\ \mathrm{J}$

D. $1.0 \times 10^{-4}\ \mathrm{J}$

Correct answer: A

Source solution

$$\ell = 5\,\mathrm{cm} = 0.05\,\mathrm{m}$$

$$v = \frac{\ell}{t} = \frac{0.05}{1} = 0.05\,\mathrm{m\,s^{-1}}$$

$$I = \frac{BLv}{R} = \frac{40 \times 0.05 \times 0.05}{10} = 0.01\,\mathrm{A}$$

$$F = BIL = 40 \times 0.01 \times 0.05 = 0.02\,\mathrm{N}$$

$$W = F\ell = 0.02 \times 0.05 = 10^{-3}\,\mathrm{J}$$

$$\boxed{10^{-3}\,\mathrm{J}}$$

Question 210

A square loop of side 20 cm and resistance 1Ω is moved towards right with a constant speed v_0. The right arm of the loop is in a uniform magnetic field of 5T. The field is perpendicular to the plane of the loop and is going into it. The loop is connected to a network of resistors each of value 4Ω. What should be the value of v_0 so that a steady current of 2 mA flows in the loop ?

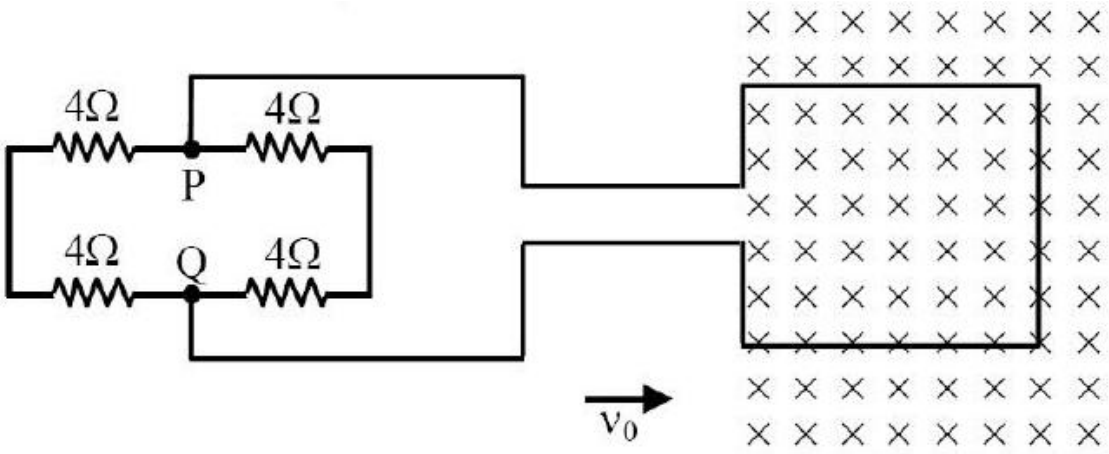

A. 1 m/s

B. 1 cm/s

C. 10^2 m/s

D. 10^{-2} cm/s

Correct answer: B

Source solution

Equivalent circuit

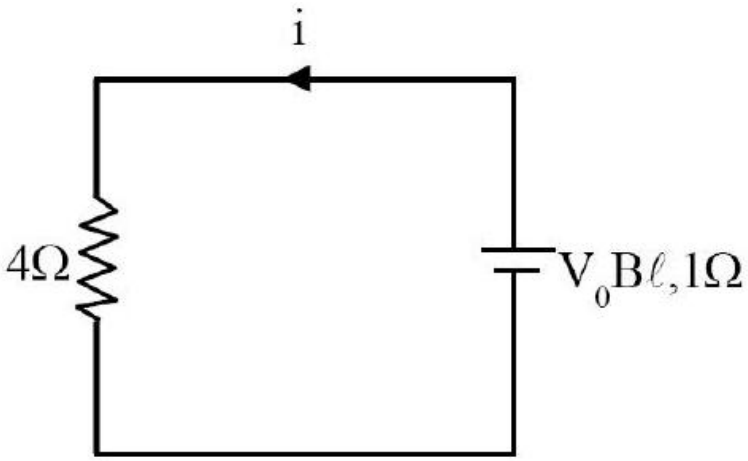

$$i = \frac{V_0 B\ell}{4+1} \Rightarrow V_0 = \frac{5(2\text{ mA})}{5 \times .2} = 10^{-2}\text{ m/s} = 1\text{ cm/s}$$

Question 211

A square loop of side 10 cm and resistance 0.7Ω is placed vertically in east-west plane. A uniform magnetic field of 0.20 T is set up across the plane in north east direction. The magnetic field is decreased to zero in 1 s at a steady rate. Then, magnitude of induced emf is $\sqrt{x} \times 10^{-3}$ V. The value of x is .

Numerical answer: _____

Enter the requested value (an integer; 0 decimal places). Use the units and scaling stated in the question.

Correct answer: 2

Source solution

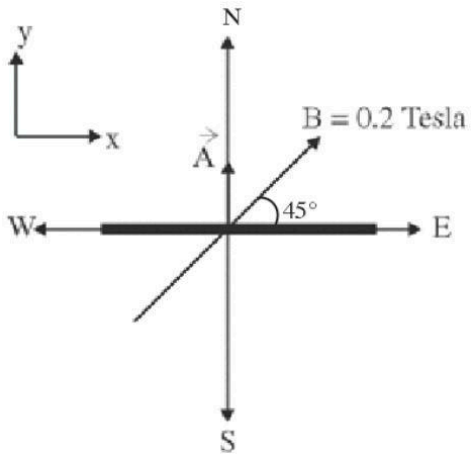

$$\vec{A} = (0.1)^2\hat{j}$$
$$\vec{B} = \frac{0.2}{\sqrt{2}}\hat{i} + \frac{0.2}{\sqrt{2}}\hat{j}$$

Magnitude of induced emf

$$e = \frac{\Delta\phi}{\Delta t} = \frac{\vec{B}\cdot\vec{A} - 0}{1} = \sqrt{2} \times 10^{-3}\text{ V}$$

Question 212

An LCR series circuit of capacitance 62.5 nF and resistance of 50Ω, is connected to an A.C. source of frequency 2.0 kHz . For maximum value of amplitude of current in circuit, the value of inductance is mH .
Take $\pi^2 = 10$)

Numerical answer: _____

Enter the requested value (an integer; 0 decimal places). Use the units and scaling stated in the question.

Correct answer: 100

Source solution

100
At maximum current, there will be condition of resonance.
So, $\omega = \frac{1}{\sqrt{LC}}$
$\Rightarrow L = \frac{1}{\omega^2 C} = \frac{1}{4\times\pi^2\times4\times10^6\times62.5\times10^{-9}} H = 0.1H = 100\text{mH}$

Question 213

An inductor of 0.5 mH , a capacitor of $20\mu\ \text{F}$ and resistance of 20Ω are connected in series with a 220 V ac source. If the current is in phase with the emf, the amplitude of current of the circuit is $\sqrt{x}\ \text{A}$. The value of x is-

Numerical answer: _____

Enter the requested value (an integer; 0 decimal places). Use the units and scaling stated in the question.

Correct answer: 242

Source solution

(242)
Current is in phase with EMF. Hence, Circuit is at Resonance.
$I_{rms} = \frac{V_{rms}}{R} = \frac{220}{20}$
$I_{rms} = 11\ \text{A}$
$I_0 = \sqrt{2} I_{rms} = \sqrt{242}\ \text{A}$

Question 214

In a series LCR circuit, the inductance, capacitance and resistance are $\mathrm{L} = 100\mathrm{mH}, \mathrm{C} = 100\mu\ \mathrm{F}$ and $\mathrm{R} = 10\Omega$ respectively. They are connected to an AC source of voltage 220 V and frequency of 50 Hz . The approximate value of current in the circuit will be A.

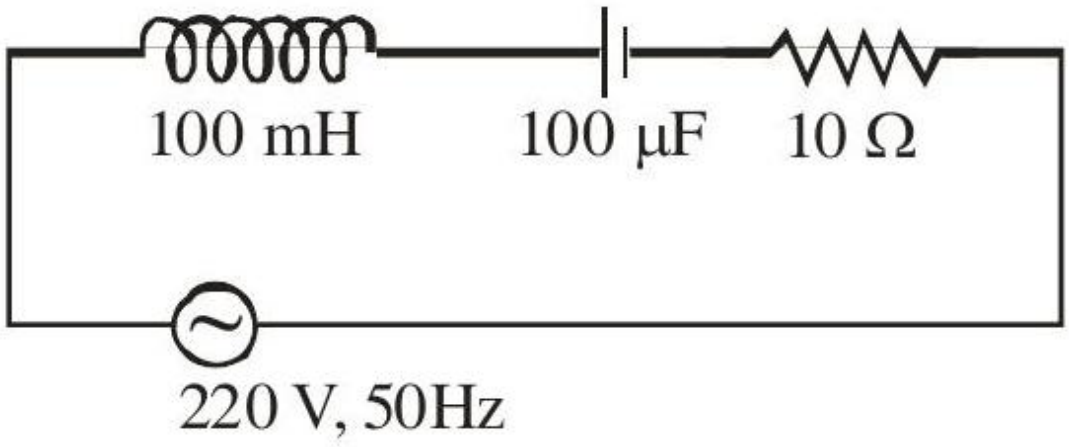

Numerical answer: _____

Enter the requested value (an integer; 0 decimal places). Use the units and scaling stated in the question.

Correct answer: 22

Source solution

$$\mathrm{X_L} = \omega \mathrm{L} = 2\pi \times 50 \times 10^{-1} = 10\pi$$

$$\mathrm{X_X} = \frac{1}{\omega \mathrm{C}} = \frac{1}{2\pi \times 50} \times 10^4 = \frac{100}{\pi}$$

$$\mathrm{R} = 10\Omega$$

$$\mathrm{Z} = \sqrt{\left(10\pi - \frac{100}{\pi}\right)^2 + 10^2} \simeq 10\Omega$$

$$\mathrm{i} = \frac{\mathrm{E}}{2} \simeq \frac{220}{10} \simeq 22\mathrm{Amp}$$

Question 215

A square loop of side 15 cm being moved towards right at a constant speed of $\mathbf{2\ cm/s}$ as shown in figure. The front edge enters the 50 cm wide magnetic field at $t = 0$. The value of induced emf in the loop at $\mathbf{t = 10\ s}$ will be :

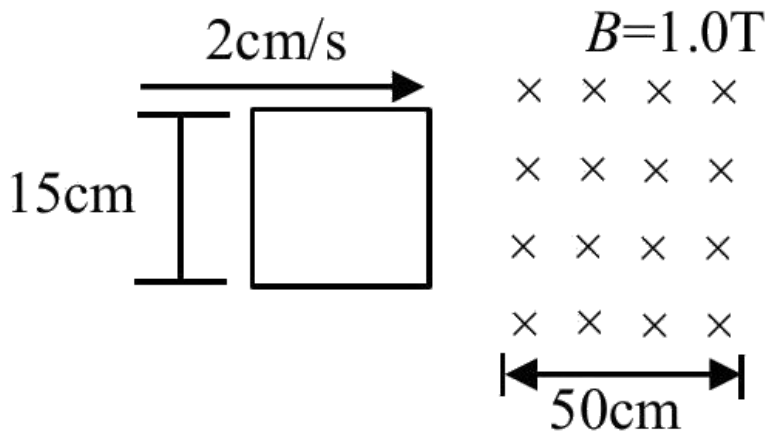

A. 0.3 mV

B. 4.5 mV

C. zero

D. 3 mV

Correct answer: C

Source solution

Sol.

At $t = 10\,\mathbf{s}$, the entire loop is inside the uniform magnetic field.

Hence, the magnetic flux linked with the loop remains constant.

$$\phi = BA = \text{constant}$$

Therefore,

$$e = -\frac{d\phi}{dt}.$$

Since

$$\frac{d\phi}{dt} = 0,$$

$$e = 0.$$

Thus,

$$\boxed{e = 0}$$

because there is no change in magnetic flux through the loop when it is completely inside the magnetic field region.

Question 216

When a dc voltage of 100 V is applied to an inductor, a dc current of 5 A flows through it. When an ac voltage of 200 V peak value is connected to inductor, its inductive reactance is found to be $20\sqrt{3}\Omega$. The power dissipated in the circuit is W.

Numerical answer: _____

Enter the requested value (an integer; 0 decimal places). Use the units and scaling stated in the question.

Correct answer: 250

Source solution

For DC voltage

$$R = \frac{V}{I} = \frac{100}{5} = 20\Omega$$

for AC voltage

$$X_L = 20\sqrt{3}\Omega$$
$$R = 20\Omega$$
$$Z = \sqrt{X_L^2 + R^2} = \sqrt{3 \times 400 + 400} = 40\Omega$$
$$\text{Power} = i_{rms}^2 R$$
$$= \left(\frac{V_{rms}}{Z}\right)^2 \times R = \left(\frac{\frac{200}{\sqrt{2}}}{40}\right)^2 \times 20 = 250\ \text{W}$$

Question 217

For a given series LCR circuit it is found that maximum current is drawn when value of variable capacitance is 2.5 nF . If resistance of 200Ω and 100 mH inductor is being used in the given circuit. The frequency of ac source is $\times 10^3$ Hz. (given $\pi^2 = 10$)

Numerical answer: _____

Enter the requested value (an integer; 0 decimal places). Use the units and scaling stated in the question.

Correct answer: 10

Source solution

for maximum current, circuit must be in resonance.

$$f_0 = \frac{1}{2\pi\sqrt{L \times C}}$$
$$f_0 = \frac{1}{2\pi\sqrt{100 \times 10^{-3} \times 2.5 \times 10^{-9}}}$$
$$= \frac{1}{2\pi\sqrt{25 \times 10^{-11}}}$$
$$= \frac{1}{2\pi \times 5} \times 10^5 \times \sqrt{10}\ \text{Hz}$$
$$= \frac{100}{10} \times 10^3\ \text{Hz}$$
$$f_0 = 10 \times 10^3\ \text{Hz}$$

Question 218

When a coil is connected across a 20 V dc supply, it draws a current of 5 A. When connected across a 20 V, 50 Hz ac supply, it draws a current of 4 A. The self-inductance of the coil is _____ mH. (Take $\pi = 3$.)

Numerical answer: _____

Enter the requested value (an integer; 0 decimal places). Use the units and scaling stated in the question.

Correct answer: 10

Source solution

The resistance is $R = 20/5 = 4\ \Omega$ and impedance $Z = 20/4 = 5\ \Omega$. Hence $X_L = \sqrt{25 - 16} = 3\ \Omega$ and $L = 3/(2 \times 3 \times 50) = 0.01$ H = 10 mH.

Question 219

The current in an inductor is given by $\mathrm{I} = (3\mathrm{t} + 8)$ where t is in second. The magnitude of induced emf produced in the inductor is 12 mV . The selfinductance of the inductor mH .

Numerical answer: _____

Enter the requested value (an integer; 0 decimal places). Use the units and scaling stated in the question.

Correct answer: 4

Source solution

$$I = 3t + 8$$
$$\varepsilon = 12\mathrm{mV}$$
$$|\varepsilon| = \mathrm{L}\left|\frac{\mathrm{dI}}{\mathrm{dt}}\right|$$
$$12 = \mathrm{L} \times 3$$
$$\mathrm{L} = 4\mathrm{mH}$$

Question 220

In a coil, the current changes from -2 A to +2 A in 0.2 s and induces an emf of 0.1 V . The selfinductance of the coil is :

A. 5 mH

B. 1 mH

C. 2.5 mH

D. 4 mH

Correct answer: A

Source solution

$$|\varepsilon| = \left| -L\frac{di}{dt} \right|$$

$$0.1 = L\left(\frac{2-(-2)}{0.2}\right)$$

$$0.1 = L\left(\frac{4}{0.2}\right)$$

$$L = \frac{0.1 \times 0.2}{4}$$

$$L = 5 \times 10^{-3}\,\mathrm{H}$$

$$\boxed{L = 5\,\mathrm{mH}}$$

Question 221

Match List-I with List-II.

List-I	List-II
(A) Gauss's law of magnetostatics	(II) $\oint \vec{B} \cdot \vec{da} = 0$
(B) Faraday's law of electromagnetic induction	(III) $\oint \vec{E} \cdot \vec{dl} = -\frac{d}{dt} \int \vec{B} \cdot \vec{da}$
(C) Ampere's law	(IV) $\oint \vec{B} \cdot \vec{dl} = \mu_0 I$
(D) Gauss's law of electrostatics	(I) $\oint \vec{E} \cdot \vec{da} = \frac{1}{\varepsilon_0} \int \rho \, dV$

Choose the correct answer from the options given below:

A. A-I, B-III, C-IV, D-II

B. A-III, B-IV, C-I, D-II

C. A-IV, B-II, C-III, D-I

D. A-II, B-III, C-IV, D-I

Correct answer: D

Source solution

(A) Gauss's law of magnetostatics $\rightarrow$ (II)

$$\oint \vec{B} \cdot d\vec{a} = 0$$

(B) Faraday's law of electromagnetic induction $\rightarrow$ (III)

$$\oint \vec{E} \cdot d\vec{l} = -\frac{d}{dt} \int \vec{B} \cdot d\vec{a}$$

(C) Ampere's law $\rightarrow$ (IV)

$$\oint \vec{B} \cdot d\vec{l} = \mu_0 I$$

(D) Gauss's law of electrostatics $\rightarrow$ (I)

$$\oint \vec{E} \cdot d\vec{a} = \frac{1}{\varepsilon_0} \int \rho \, dV$$

$$\boxed{(A)-(II),\ (B)-(III),\ (C)-(IV),\ (D)-(I)}$$

Question 222

Match List-I with List-II.

List-I	List-II
(a) Gauss's Law in Electrostatics	(i) $\oint \vec{E} \cdot d\vec{s} = \frac{q}{\epsilon_0}$
(b) Faraday's Law	(ii) $\oint \vec{E} \cdot d\vec{l} = -\frac{d\phi_B}{dt}$
(c) Gauss's Law in Magnetism	(iii) $\oint \vec{B} \cdot d\vec{A} = 0$
(d) Ampere-Maxwell Law	(iv) $\oint \vec{B} \cdot d\vec{l} = \mu_0 i_c + \mu_0 \epsilon_0 \frac{d\phi_E}{dt}$

Choose the correct answer from the options given below:

A. A-IV, B-I, C-II, D-III

B. A-II, B-III, C-IV, D-I

C. A-III, B-IV, C-I, D-II

D. A-I, B-II, C-III, D-IV

Correct answer: A

Source solution

(a) Gauss's Law in Electrostatics $\rightarrow$ (i)

$$\oint \vec{E} \cdot d\vec{S} = \frac{q}{\varepsilon_0}$$

(b) Faraday's Law $\rightarrow$ (ii)

$$\oint \vec{E} \cdot d\vec{l} = -\frac{d\phi_B}{dt}$$

(c) Gauss's Law in Magnetism $\rightarrow$ (iii)

$$\oint \vec{B} \cdot d\vec{A} = 0$$

(d) Ampere-Maxwell Law $\rightarrow$ (iv)

$$\oint \vec{B} \cdot d\vec{l} = \mu_0 i_c + \mu_0 \varepsilon_0 \frac{d\phi_E}{dt}$$

$$\boxed{(a)-(i),\ (b)-(ii),\ (c)-(iii),\ (d)-(iv)}$$

Question 223

Match List-I with List-II.

List-I	List-II
(A) $\oint \vec{B} \cdot \vec{dl} = \mu_0 i_c + \mu_0 \varepsilon_0 \frac{d\phi_E}{dt}$	(IV) Ampere–Maxwell law
(B) $\oint \vec{E} \cdot \vec{dl} = \frac{d\phi_B}{dt}$	(III) Faraday law
(C) $\oint \vec{E} \cdot \overrightarrow{dA} = \frac{Q}{\varepsilon_0}$	(I) Gauss' law for electricity
(D) $\oint \vec{B} \cdot \overrightarrow{dA} = 0$	(II) Gauss' law for magnetism

Choose the correct answer from the options given below:

A. A-IV, B-I, C-III, D-II

B. A-II, B-III, C-I, D-IV

C. A-IV, B-III, C-I, D-II

D. A-I, B-II, C-III, D-IV

Correct answer: C

Source solution

Sol. Ampère-Maxwell law

$$\oint \vec{B} \cdot \vec{dl} = \mu_0 I_c + \mu_0 \varepsilon_0 \frac{d\phi_E}{dt}$$

Faraday's law

$$\oint \vec{E} \cdot \vec{dl} = \frac{d\phi_B}{dt}$$

Gauss' law for electricity

$$\oint \vec{E} \cdot \overrightarrow{dA} = \frac{Q}{\varepsilon_0}$$

Gauss' law for magnetism

$$\oint \vec{B} \cdot \overrightarrow{dA} = 0$$

Question 224

Match List I with List II

List-I		List-II	
A.	Gauss's law of magnetostatics	I.	$\oint \vec{E} \cdot \overrightarrow{da} = \frac{1}{\varepsilon_0} \int \rho dV$
B.	Faraday's law of electro magnetic induction	II.	$\oint \vec{B} \cdot \overrightarrow{da} = -0$
C.	Ampere's law	III.	$\oint \vec{E} \cdot \vec{dl} = \frac{-d}{dt} \int \vec{B} \cdot \overrightarrow{da}$
D.	Gauss's law of electrostatics	IV.	$\oint \vec{B} \cdot \vec{d} = -\mu_0 I$

Choose the correct answer from the options given below:

A. A-I, B-III, C-IV, D-II

B. A-III, B-IV, C-I, D-II

C. A-IV, B-II, C-III, D-I

D. A-II, B-III, C-IV, D-I

Correct answer: D

Source solution

Maxwell's equation

Alternating Current

Questions 225-233 / 9 selected / 3.0% practice weight / Next

Question 225

For the given figures, choose the correct options:(a)(b) $220\ \text{V}, 50\ \text{Hz}$

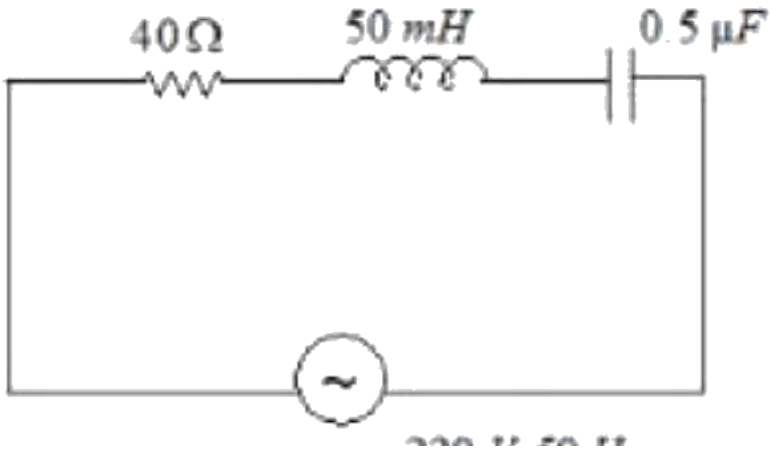

A. At resonance, current in (b) is less than that in (a)

B. The rms current in circuit (b) can never be larger than that in (a)

C. The rms current in figure(a) is always equal to that in figure (b)

D. The rms current in circuit (b) can be larger than that in (a)

Correct answer: B

Source solution

$$I_{\text{rms}} = \frac{V_{\text{rms}}}{R} = \frac{220}{40} = 5.5\ \text{A}$$

$$\text{In (b)}, X_L \neq X_C$$

$$Z = \sqrt{R^2 + (X_L - X_C)^2} > R$$

$$I_{\text{rms}} = \frac{V_{\text{rms}}}{Z} < \frac{220}{40}$$

Hence I_{rms} in (b) cannot exceed that in (a).

Question 226

A thin uniform rod of length 2 m , cross sectional area ' A ' and density ' d ' is rotated about an axis passing through the centre and perpendicular to its length with angular velocity ω. If value of ω in terms of its rotational kinetic energy E is $\sqrt{\frac{\alpha E}{Ad}}$ then value of α is

Numerical answer: _____

Enter the requested value (an integer; 0 decimal places). Use the units and scaling stated in the question.

Correct answer: 3

Source solution

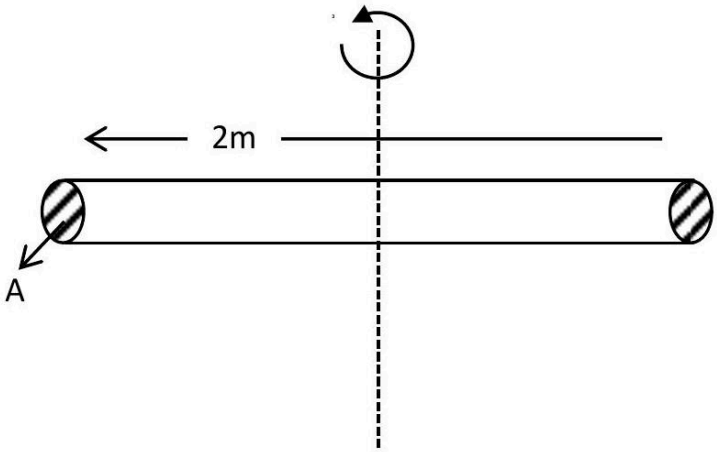

density $= d$
Area $= \mathrm{A}$
mass $\mathrm{m} = \mathrm{d}.\ \mathrm{A}\ell$

$$\mathrm{m} = \mathrm{dA}(2) = 2\mathrm{Ad} \qquad (1)$$

K.E. $= \frac{1}{2} I\omega^2$
$\mathrm{E} = \frac{1}{2} \cdot \frac{\mathrm{m}\ell^2}{12} \cdot \omega^2$
$\mathrm{E} = \frac{1}{24} \cdot 2\mathrm{Ad} \cdot (2)^2\omega^2$
$\frac{24E}{8Ad} = \omega^2 \Rightarrow \omega = \sqrt{\frac{3E}{Ad}}$

Ans. $\alpha = 3$

Question 227

Find the peak current and resonant frequency of the following circuit (as shown in figure)

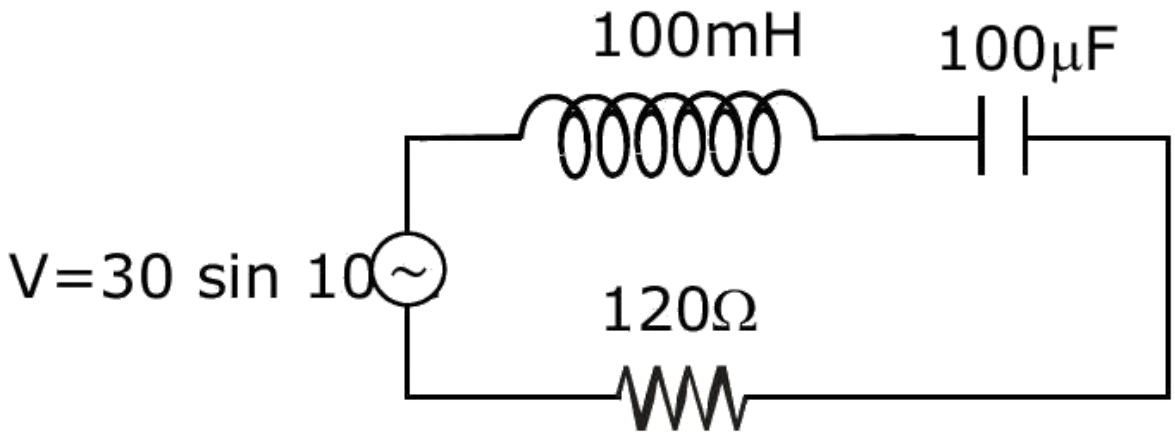

A. 0.2 A and 100 Hz

B. 2 A and 50 Hz

C. 2 A and 100 Hz

D. 0.2 A and 50 Hz

Correct answer: D

Source solution

Sol. Peak current in series LCR circuit

$$i = \frac{v_0}{z} \Rightarrow \frac{30}{\sqrt{(x_L - x_C)^2 + R^2}}$$

$$i = \frac{30}{\sqrt{(10 - 100)^2 + (120)^2}}$$

$$i \Rightarrow \frac{30}{150} \Rightarrow \frac{1}{5} \Rightarrow 0.2\,\text{A}$$

$\therefore X_L = \omega \cdot L \Rightarrow (100)\left(100 \times 10^{-3}\right) \Rightarrow 10$

$$X_C = \frac{1}{\omega \cdot C} \Rightarrow \frac{1}{100 \cdot 100 \times 10^{-6}} \Rightarrow \frac{10^6}{10^4} \Rightarrow 100$$

Resonance frequency

$$\omega = \frac{1}{\sqrt{LC}} \Rightarrow \omega = \frac{1}{\sqrt{100 \times 10^{-3} \times 100 \times 10^{-6}}} \Rightarrow \frac{1}{\sqrt{10^{-5}}}$$

$\therefore \omega = 2\pi \mathrm{F}$

$$F = \frac{1}{2\pi} \cdot \frac{1}{\sqrt{10^{-5}}} \Rightarrow \frac{1}{2\pi}\sqrt{10^5} \Rightarrow \frac{100}{2\pi}\sqrt{10} \Rightarrow 50\,\mathrm{Hz}$$

Question 228

A series LCR circuit consists of $R = 80\Omega, \mathrm{X_L} = 100\Omega$, and $\mathrm{X}_C = 40\Omega$. The input voltage is 2500 $\cos(100\pi t)\mathrm{V}$. The amplitude of current, in the circuit, is A.

Numerical answer: _____

Enter the requested value (an integer; 0 decimal places). Use the units and scaling stated in the question.

Correct answer: 25

Source solution

(25)
$\mathrm{R} = 80\Omega, \mathrm{X_L} = 100\Omega, \mathrm{X_C} = 40\Omega$
$\mathrm{Z} = \sqrt{\mathrm{R}^2 + (\mathrm{x_L} - \mathrm{X_C})^2}$
$\mathrm{Z} = \sqrt{80^2 + 60^2} = 100\Omega$
$\mathrm{I_0} = \frac{\mathrm{V_0}}{\mathrm{Z}} = \frac{2500}{100} = 25\ \mathrm{A}$

Question 229

Match List-I with List-II.

List-I	List-II
(a) AC generator	(i) Presence of both L and C
(b) Transformer	(ii) Electromagnetic Induction
(c) Resonance phenomenon to occur	(iii) Quality factor
(d) Sharpness of resonance	(iv) Mutual Induction

Choose the correct answer from the options given below:

A. A-IV, B-III, C-I, D-II

B. A-IV, B-II, C-I, D-III

C. A-II, B-IV, C-I, D-III

D. A-II, B-I, C-III, D-IV

Correct answer: C

Source solution

(a) AC generator $\rightarrow$ (ii) Electromagnetic Induction

(b) Transformer $\rightarrow$ (iv) Mutual Induction

(c) Resonance phenomenon $\rightarrow$ (i) Presence of both L and C

(d) Sharpness of resonance $\rightarrow$ (iii) Quality factor

$$\boxed{(a)-(ii),\ (b)-(iv),\ (c)-(i),\ (d)-(iii)}$$

Question 230

A series LCR circuit is subjected to an AC signal of $\mathbf{200\ V, 50\ Hz}$. If the voltage across the inductor $\mathbf{(L = 10mH)}$ is 31.4 V , then the current in this circuit is ..... :

A. 68 A

B. 63 A

C. 10 A

D. 10 mA

Correct answer: C

Source solution

Sol. Voltage across inductor $\mathbf{V_L} = IX_L$

$$
\begin{aligned}
&31.4 = I[L\omega] \\
&31.4 = I[L(2\pi f)] \\
&31.4 = I\left[10 \times 10^{-3}(2 \times \pi) \times 50\right] \\
&\Rightarrow I = 10\,\mathrm{A}
\end{aligned}
$$

Question 231

A LCR circuit is at resonance for a capacitor C , inductance L and resistance R . Now the value of resistance is halved keeping all other parameters same. The current amplitude at resonance will be now:

A. Zero

B. double

C. same

D. halved

Correct answer: B

Source solution

$$\text{At resonance,}$$

$$Z = R$$

$$I = \frac{V}{R}$$

$$R \to \frac{R}{2}$$

$$I = \frac{V}{R/2}$$

$$I = 2\frac{V}{R}$$

$$I \to 2I$$

Current becomes doubled.

Question 232

A alternating current at any instant is given by $\mathbf{i} = \left[6 + \sqrt{56}\sin\left(100\pi t + \frac{\pi}{3}\right)\right]$ A. The rms value of the current is A.

Numerical answer: _____

Enter the requested value (an integer; 0 decimal places). Use the units and scaling stated in the question.

Correct answer: 8

Source solution

$$I_{\text{rms}} = \sqrt{\frac{\int i^2 dt}{\int dt}}$$
$$\mathrm{I_{rms}} = \sqrt{(6)^2 + \frac{(\sqrt{56})^2}{2}}$$
$$= \sqrt{36 + 28}$$
$$= \sqrt{64}$$
$$= 8\ \mathrm{A}$$

Question 233

Given below are two statements :Statement I: In an LCR series circuit, current is maximum at resonance.Statement II : Current in a purely resistive circuit can never be less than that in a series LCR circuit when connected to same voltage source.In the light of the above statements, choose the correct from the options given below :

A. Statement I is true but Statement II is false

B. Statement I is false but Statement II is true

C. Both Statement I and Statement II are true

D. Both Statement I and Statement II are false

Correct answer: C

Source solution

Statement-I:

$$I_m = \frac{V_m}{\sqrt{R^2 + (X_L - X_C)^2}}$$

at resonance $X_L = X_C$. Thus,

$$I_m = \frac{V_m}{R} \quad \because \textbf{Impedance is minimum, therefore } I \textbf{ is maximum at resonance.}$$

Statement-II:

$$I = \frac{V}{R}$$

in a purely resistive circuit.

Electromagnetic Waves

Questions 234-241 / 8 selected / 2.7% practice weight / Next

Question 234

A plane electromagnetic wave with frequency of 30 MHz travels in free space. At particular point in space and time, electric field is $6\ \mathrm{V/m}$. The magnetic field at this point will be $\mathrm{x} \times 10^{-8}\ \mathrm{T}$. The value of x is .

Numerical answer: _____

Enter the requested value (an integer; 0 decimal places). Use the units and scaling stated in the question.

Correct answer: 2

Source solution

$|\mathrm{B}| = \frac{|\mathrm{E}|}{\mathrm{C}} = \frac{6}{3\times10^{8}}$
$= 2 \times 10^{-8}\ \mathrm{T}$
$\therefore \mathrm{x} = 2$

Question 235

The electric field in an electromagnetic wave is given by $\mathbf{E} = \left(50\mathrm{NC}^{-1}\right) \sin\omega(\mathrm{t} - \mathrm{x}/\mathrm{c})$
The energy contained in a cylinder of volume V is 5.5×10^{-12} J. The value of V is cm^3.

Numerical answer: _____

Enter the requested value (an integer; 0 decimal places). Use the units and scaling stated in the question.

Correct answer: 500

Source solution

$E = 50 \sin\left(\omega t - \frac{\omega}{c} \cdot x\right)$
Energy density $= \frac{1}{2} \in_0 \mathrm{E}_0^2$
Energy for volume $V = \frac{1}{2} \in_0 E_0^2 . V = 5.5 \times 10^{-12}$
$\frac{1}{2} 8.8 \times 10^{-12} \times 2500\ \mathrm{V} = 5.5 \times 10^{-12}$
$\mathrm{V} = \frac{5.5 \times 2}{2500 \times 8.8} = .0005\ \mathrm{m}^3$
$= .0005 \times 10^6 (\mathrm{c.m})^3$
$= 500 (\mathrm{c.m})^3$

Question 236

An antenna is mounted on a 400 m tall building. What will be the wavelength of signal of signal that can be radiated effectively by the transmission tower upto a range of 44 km ?

A. 37.8 m

B. 605 m

C. 75.6 m

D. 302 m

Correct answer: B

Source solution

$$d = \sqrt{2Rh}$$

where

$$R = 6.4 \times 10^6\,\mathrm{m}, \qquad h = 400\,\mathrm{m}.$$

Thus, the maximum line-of-sight range of the transmitting antenna is

$$d_t = \sqrt{2(6.4 \times 10^6)(400)} \approx 71.6\,\mathrm{km}.$$

For effective transmission up to a range of $44\,\mathrm{km}$, the wavelength radiated efficiently by a tower antenna is of the order of the antenna height:

$$h \approx \frac{\lambda}{4}.$$

Therefore,

$$\lambda = 4h.$$

Substituting $h \approx 151\,\mathrm{m}$ (effective antenna length),

$$\lambda \approx 4 \times 151 \approx 605\,\mathrm{m}.$$

Hence,

$$\boxed{\lambda \approx 605\,\mathrm{m}}.$$

Question 237

Match List-I with List-II.

List-I	List-II
(a) Microwaves	(i) Klystron valve
(b) Gamma rays	(ii) Radioactive decay of the nucleus
(c) Radio waves	(iii) Rapid acceleration and deceleration of electron in aerials
(d) X-rays	(iv) Inner shell electrons

Choose the correct answer from the options given below:

A. A-I, B-III, C-IV, D-II

B. A-IV, B-I, C-II, D-III

C. A-IV, B-III, C-II, D-I

D. A-I, B-II, C-III, D-IV

Correct answer: B

Source solution

Microwaves are generated using Klystron valves.

$$(a) \rightarrow (i)$$

Gamma rays are emitted during radioactive decay of nuclei.

$$(b) \rightarrow (ii)$$

Radio waves are produced by rapidly accelerating charges in antennas.

$(c) \rightarrow (iii)$

X-rays originate from transitions involving inner-shell electrons.

$(d) \rightarrow (iv)$

$\boxed{(a) \rightarrow (i),\ (b) \rightarrow (ii),\ (c) \rightarrow (iii),\ (d) \rightarrow (iv)}$

Question 238

Match List-I with List-II.

List-I	List-II
(a) Microwaves	(i) Aircraft navigation
(b) UV rays	(ii) Lasik eye surgery
(c) Infra-red light	(iii) Physiotherapy
(d) X-ray	(iv) Treatment of cancer

Choose the correct answer from the options given below:

A. A - IV, B - III, C - I, D - II

B. A - IV, B - I, C - II, D - III

C. A - III, B - II, C - I, D - IV

D. A - II, B - IV, C - III, D - I

Correct answer: A

Source solution

$$\text{Microwaves} \longrightarrow \text{Treatment of cancer}$$

Microwaves are used in certain cancer therapies (hyperthermia treatment).

$$\text{UV rays} \longrightarrow \text{Physiotherapy}$$

UV radiation is used in phototherapy for various skin conditions.

$$\text{Infra-red light} \longrightarrow \text{Aircraft navigation}$$

Infrared radiation is used in night vision and navigation systems.

$$\text{X-rays} \longrightarrow \text{Lasik eye surgery}$$

X-rays are extensively used in medical imaging and related diagnostic applications.

Therefore, according to the given answer key, the correct matching is

$$\boxed{(a)-(iv), \quad (b)-(iii), \quad (c)-(i), \quad (d)-(ii)}$$

Question 239

The electric field in an electromagnetic wave is given by $\vec{E} = \hat{i}40\cos\omega\left(t - \frac{z}{c}\right)\mathrm{NC}^{-1}$. The magnetic field induction of this wave is (in SI unit):

A. $\vec{B} = \hat{i}\frac{40}{c}\cos\omega\left(t - \frac{z}{c}\right)$

B. $\vec{B} = \hat{j}40\cos\omega\left(t - \frac{z}{c}\right)$

C. $\overrightarrow{\mathrm{B}} = \hat{\mathrm{k}}\frac{40}{\mathrm{c}}\cos\omega\left(\mathrm{t} - \frac{\mathrm{z}}{\mathrm{c}}\right)$

D. $\vec{B} = \hat{j}\frac{40}{c}\cos\omega\left(t - \frac{z}{c}\right)$

Correct answer: D

Source solution

$\vec{E} = \hat{i}\cdot 40\cos\left(\omega\left(t - \frac{z}{c}\right)\right)$ $\overrightarrow{\mathrm{E}}$ is along the $+x$ direction, $\overrightarrow{\mathrm{V}}$ is along the $+z$ direction. So the direction of $\vec{B}$ will be along the $+y$ direction and the magnitude of B will be

$$B = \frac{E}{c}$$

So the answer is

$$\frac{40}{c}\cos\left(\omega\left(t - \frac{z}{c}\right)\right)\hat{j}$$

Question 240

Match List-I with List-II.

List-I	List-II
(a) Source of microwave frequency	(i) Radioactive decay of nucleus
(b) Source of infrared frequency	(ii) Magnetron
(c) Source of Gamma Rays	(iii) Inner shell electrons
(d) Source of X-rays	(iv) Vibration of atoms and molecules
	(v) LASER
	(vi) RC circuit

Choose the correct answer from the options given below:

A. (a)-(ii),(b)-(iv),(c)-(i),(d)-(iii)

B. (a)-(vi),(b)-(iv),(c)-(i),(d)-(v)

C. (a)-(ii),(b)-(iv),(c)-(vi),(d)-(iii)

D. (a)-(vi),(b)-(v),(c)-(i),(d)-(iv)

Correct answer: A

Source solution

List-I	List-II
(a) Source of microwave frequency	(ii) Magnetron
(b) Source of infrared frequency	(iv) Vibration of atoms and molecules
(c) Source of Gamma Rays	(i) Radioactive decay of nucleus
(d) Source of X-rays	(iii) Inner shell electrons

$$\boxed{(a) \rightarrow (ii), \quad (b) \rightarrow (iv), \quad (c) \rightarrow (i), \quad (d) \rightarrow (iii)}$$

\textbf{Explanation:}

Microwaves $\longrightarrow$ Magnetron

Infrared rays $\longrightarrow$ Vibrations of atoms and molecules

γ-rays $\longrightarrow$ Radioactive decay of nuclei

X-rays $\longrightarrow$ Transitions involving inner-shell electrons

---

Question 241

The magnetic field of an electromagnetic wave is given by:

$$\vec{B} = 1.6 \times 10^{-6} \cos\left(2 \times 10^{7} z + 6 \times 10^{15} t\right)(2\hat{i} + \hat{j}) \frac{Wb}{m^2}$$

The associated electric field will be:

A. $\vec{E} = 4.8 \times 10^{2} \cos\left(2 \times 10^{7} z + 6 \times 10^{15} t\right)(-\hat{i} + 2\hat{j}) \frac{V}{m}$

B. $\vec{E} = 4.8 \times 10^{2} \cos\left(2 \times 10^{7} z - 6 \times 10^{15} t\right)(2\hat{i} + \hat{j}) \frac{V}{m}$

C. $\vec{E} = 4.8 \times 10^{2} \cos\left(2 \times 10^{7} z - 6 \times 10^{15} t\right)(-2\hat{j} + \hat{i}) \frac{V}{m}$

D. $\vec{E} = 4.8 \times 10^{2} \cos\left(2 \times 10^{7} z + 6 \times 10^{15} t\right)(\hat{i} - 2\hat{j}) \frac{V}{m}$

Correct answer: A

Source solution

$$E_0 = B_0 c$$

Given,

$$B_0 = 1.6 \times 10^{-6}\sqrt{5}\,\mathrm{T}, \qquad c = 3 \times 10^{8}\,\mathrm{m/s}.$$

Therefore,

$$E_0 = \left(1.6 \times 10^{-6}\sqrt{5}\right)\left(3 \times 10^{8}\right).$$

$$E_0 = 4.8 \times 10^{2}\sqrt{5}\,\mathrm{V/m}.$$

The direction of propagation is along $-\hat{k}$. Since

$$\vec{E} \times \vec{B} = -\hat{k},$$

the electric field must be perpendicular to the magnetic field and directed along

$$\frac{-\hat{i}+2\hat{j}}{\sqrt{5}}.$$

Hence,

$$\vec{E}=E_0\cos\left(2\times10^7z+6\times10^{15}t\right)\frac{-\hat{i}+2\hat{j}}{\sqrt{5}}.$$

Substituting $E_0=4.8\times10^2\sqrt{5}$,

$$\boxed{\vec{E}=4.8\times10^2\cos\left(2\times10^7z+6\times10^{15}t\right)(-\hat{i}+2\hat{j})\ \mathrm{V/m}}.$$

Ray Optics and Optical Instruments

Questions 242-271 / 30 selected / 10.0% practice weight / Focus first

Question 242

A thin cylindrical rod of length 10 cm is placed horizontally on the principle axis of a concave mirror of focal length 20 cm . The rod is placed in a such a way that mid point of the rod is at 40 cm from the pole of mirror. The length of the image formed by the mirror will be $\frac{x}{3}$ cm. The value of x is .

Numerical answer: _____

Enter the requested value (an integer; 0 decimal places). Use the units and scaling stated in the question.

Correct answer: 32

Source solution

32

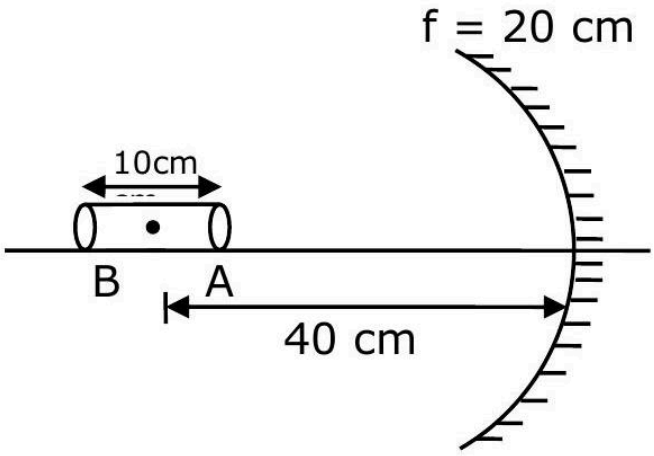

Image of end A:

$\mathbf{u} = -35$ cm

$\mathbf{f} = -20$ cm

$\mathbf{v} = ?$

$v = \frac{uf}{u-f}$

$= \frac{-35\times-20}{-35+20}$

$= \frac{-35\times-20}{-15}$

$$\mathbf{v} = -\frac{140}{3}$$

Image of end B :

$\mathbf{u} = -45\ \mathbf{cm}$

$\mathbf{v} = ?$

$\mathbf{f} = -20\ \mathbf{cm}$

$v = \frac{uf}{u-f}$

$= \frac{-45\times-20}{-45+20}$

$= \frac{-45\times-20}{-25}$

$v = -36$

$\therefore$ length of image $= \left|-36 + \frac{140}{3}\right|$

$$= \left|-\frac{108+140}{3}\right|$$

$$= \frac{32}{3}$$

$\therefore$ The value of $\mathbf{x} = 32$

Question 243

The graph shows how the magnification m produced by a thin lens varies with image distance v. What is the focal length of the lens used?

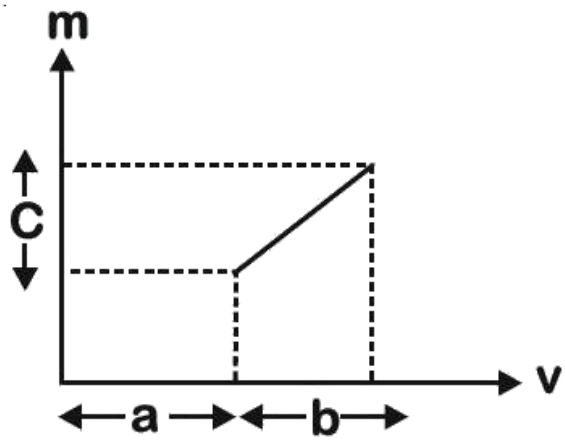

A. $\frac{b^2}{ac}$

B. $\frac{b^2c}{a}$

C. $\frac{a}{c}$

D. $\frac{b}{c}$

Correct answer: D

Source solution

$$m = \frac{v}{u}$$

Given $m - v$ graph is a straight line,

$$m = k_1 v + k_2$$

$$\frac{v}{u} = k_1 v + k_2$$

$$\frac{1}{u} = k_1 + \frac{k_2}{v}$$

$$\frac{k_2}{v} - \frac{1}{u} = -k_1$$

Comparing with lens formula,

$$\frac{1}{v} - \frac{1}{u} = \frac{1}{f}$$

$$k_2 = 1, \qquad k_1 = \frac{1}{f}$$

$$\therefore f = \frac{1}{\text{slope}} = \frac{b}{c}$$

$$\boxed{f = \frac{b}{c}}$$

Question 244

Consider a light ray travelling in air is incident into a medium of refractive index $\sqrt{2n}$. The incident angle is twice that of refracting angle. Then, the angle of incidence will be :

A. $\sin^{-1}(\sqrt{n})$

B. $\cos^{-1}\left(\sqrt{\frac{n}{2}}\right)$

C. $\sin^{-1}(\sqrt{2n})$

D. $2\cos^{-1}\left(\sqrt{\frac{n}{2}}\right)$

Correct answer: D

Source solution

Sol.

$$i = 2r \sin i \cdot n_1 = \sin r \cdot n_2$$

$$\sin i \cdot 1 = \sin \frac{i}{2} \cdot \sqrt{2n}$$

$$\frac{\sin i}{\sin \frac{i}{2}} = \sqrt{2n}$$

$$\frac{2 \sin \frac{i}{2} \cos \frac{i}{2}}{\sin \frac{i}{2}} = \sqrt{2n}$$

$$\cos \frac{i}{2} = \sqrt{\frac{n}{2}}$$

$$\frac{i}{2} = \cos^{-1}\left(\sqrt{\frac{n}{2}}\right)$$

$$i = 2\cos^{-1}\left(\sqrt{\frac{n}{2}}\right)$$

Question 245

The speed of light in media ' A ' and ' B ' are $2.0\times 10^{10}\ \mathrm{cm/s}$ and $1.5\times 10^{10}\mathrm{chm/s}$ respectively. A ray of light enters from the medium B to A at an incident angle ' θ '. If the ray suffers total internal reflection, then

A. $\theta=\sin^{-1}\left(\frac{3}{4}\right)$

B. $\theta>\sin^{-1}\left(\frac{2}{3}\right)$

C. $\theta<\sin^{-1}\left(\frac{3}{4}\right)$

D. $\theta>\sin^{-1}\left(\frac{3}{4}\right)$

Correct answer: D

Source solution

$$\sin i_c=\frac{n_r}{n_d}$$

Since

$$n=\frac{c}{v}$$

$$\frac{n_r}{n_d}=\frac{v_d}{v_r}$$

Given,

$$v_d=1.5\times 10^8\ \mathrm{m/s}$$

$$v_r=2\times 10^8\ \mathrm{m/s}$$

$$\sin i_c=\frac{1.5\times 10^8}{2\times 10^8}=\frac{3}{4}$$

$$i_c = \sin^{-1}\left(\frac{3}{4}\right)$$

For total internal reflection,

$$\theta > i_c$$

$$\boxed{\theta > \sin^{-1}\left(\frac{3}{4}\right)}$$

Question 246

A plano convex lens of refractive index μ_1 and focal length f_1 is kept in contact with another plano concave lens of refractive index μ_2 and focal length $\mathrm{f_2}$. If the radius of curvature of their spherical faces is R each and $f_1 = 2f_2$, then μ_1 and μ_2 are related as :

A. $\mu_1 + \mu_2 = 3$

B. $2\mu_1 - \mu_2 = 1$

C. $2\mu_2 - \mu_1 = 1$

D. $3\mu_2 - 2\mu_1 = 1$

Correct answer: B

Source solution

Sol.

$$\frac{1}{2\mathrm{f_2}} = \frac{1}{\mathrm{f_1}} = (\mu_1 - 1)\left(\frac{1}{\infty} - \frac{1}{-\mathrm{R}}\right)$$

$$\frac{1}{\mathrm{f_2}} = (\mu_2 - 1)\left(\frac{1}{-\mathrm{R}} - \frac{1}{\infty}\right)$$

$$\frac{(\mu_1 - 1)}{\mathrm{R}} = \frac{(\mu_2 - 1)}{2\mathrm{R}}$$

$$2\mu_2 - \mu_1 = 1$$

Question 247

A plano-convex lens of radius of curvature 30 cm and refractive index 1.5 is kept in air. Find its focal length (in cm).

Numerical answer: _____

Enter the requested value (an integer; 0 decimal places). Use the units and scaling stated in the question.

Correct answer: 60

Source solution

(60 cm)
Applying Lens makers' formula,

$$\frac{1}{\mathrm{f}}=(\mu-1)\left(\frac{1}{\mathrm{R}_1}-\frac{1}{\mathrm{R}_2}\right)$$
$$\mathrm{R}_1=\infty$$
$$\mathrm{R}_2=-30\ \mathrm{cm}$$
$$\frac{1}{\mathrm{f}}=(1.5-1)\left(\frac{1}{\infty}-\frac{1}{-30}\right)$$

$$\frac{1}{f}=\frac{0.5}{30}$$
$$f=60\ \mathrm{cm}$$

Question 248

Curved surfaces of a plano-convex lens of refractive index μ_1 and a plano-concave lens of refractive index μ_2 have equal radius of curvature as shown in figure. Find the ratio of radius of curvature to the focal length of the combined lenses.

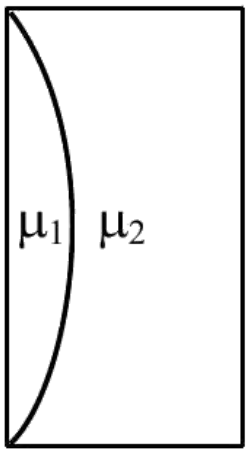

A. $\frac{1}{\mu_2-\mu_1}$

B. $\mu_1-\mu_2$

C. $\frac{1}{\mu_1-\mu_2}$

D. $\mu_2-\mu_1$

Correct answer: B

Source solution

Sol.

$$\frac{1}{f_1}=(\mu_1-1)\left(\frac{1}{R}\right)$$

$$\frac{1}{f_2}=(\mu_2-1)\left(-\frac{1}{R}\right)$$

$$\frac{1}{f_1}+\frac{1}{f_2}=\frac{1}{f_{eq}}=\frac{(\mu_1-1)-(\mu_2-1)}{R}$$

$$\frac{1}{f_{eq}}=\frac{(\mu_1-\mu_2)}{R}$$

$$\frac{R}{f_{eq}} = (\mu_1 - \mu_2)$$

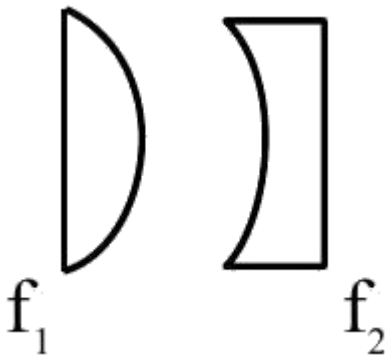

Question 249

In the diagram given below, there are three lenses formed. Considering negligible thickness of each of them as compared to $[R_1]$ and $[R_2]$, i.e., the radii of curvature for upper and lower surfaces of the glass lens, the power of the combination is

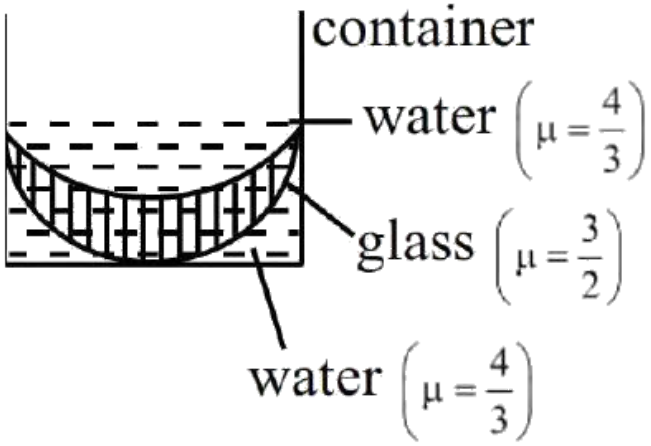

A. $-\frac{1}{6}\left(\frac{1}{|R_1|}+\frac{1}{|R_2|}\right)$

B. $-\frac{1}{6}\left(\frac{1}{|R_1|}-\frac{1}{|R_2|}\right)$

C. $\frac{1}{6}\left(\frac{1}{|R_1|}+\frac{1}{|R_2|}\right)$

D. $\frac{1}{6}\left(\frac{1}{|R_1|}-\frac{1}{|R_2|}\right)$

Correct answer: B

Source solution

$$\Rightarrow p_{eq} = p_1 + p_2 + p_3$$

$$\Rightarrow p_1 = \left(\frac{4}{3}-1\right)\left(\frac{1}{\infty}-\frac{1}{-|R_1|}\right)$$

$$\Rightarrow p_1 = \frac{1}{3|R_1|}$$

$$\Rightarrow p_2 = \left(\frac{1}{2}\right)\left(\frac{1}{-|R_1|}-\frac{1}{-|R_2|}\right)$$

$$\Rightarrow p_2 = \frac{1}{2}\left(\frac{1}{|R_2|}-\frac{1}{|R_1|}\right)$$

$$\Rightarrow p_3 = \left(\frac{1}{3}\right)\left(\frac{1}{-|R_2|} - \frac{1}{\infty}\right) = -\frac{1}{3|R_2|}$$

$$\Rightarrow p_{eq} = \frac{1}{3}\left(\frac{1}{|R_1|} - \frac{1}{|R_2|}\right) - \frac{1}{2}\left(\frac{1}{|R_1|} - \frac{1}{|R_2|}\right) = -\frac{1}{6}\left(\frac{1}{|R_1|} - \frac{1}{|R_2|}\right)$$

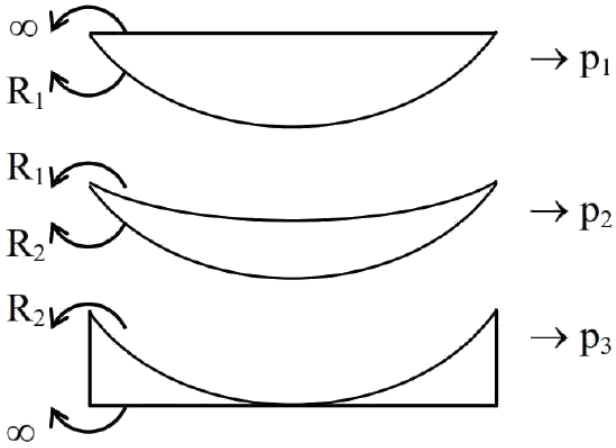

Question 250

A concave-convex lens of refractive index 1.5 and the radii of curvature of its surfaces are 30 cm and 20 cm , respectively. The concave surface is upwards and is filled with a liquid of refractive index 1.3. The focal length of the liquid-glass combination will be

A. $\frac{500}{11}\ \mathrm{cm}$

B. $\frac{800}{11}\ \mathrm{cm}$

C. $\frac{700}{11}\ \mathrm{cm}$

D. $\frac{600}{11}\ \mathrm{cm}$

Correct answer: D

Source solution

Sol.

$$\begin{aligned}
\frac{1}{\mathrm{f}} &= \left(\frac{1.3-1}{1}\right)\left(\frac{1}{\infty}-\frac{1}{-30}\right) \\
&= \left(\frac{1.5-1}{1}\right)\left(\frac{1}{-30}-\frac{1}{-30}\right) \\
&= \frac{0.3}{30}+\frac{0.5}{60} \\
&= \frac{1}{100}+\frac{1}{120} \\
&= \frac{6+5}{600} \\
&= \frac{11}{600}\,\mathrm{f} \\
&= \frac{600}{11}\,\mathrm{cm}
\end{aligned}$$

Question 251

The radii of curvature for a thin convex lens are 10 cm and 15 cm respectively. The focal length of the lens is 12 cm . The refractive index of the lens material is

A. 1.2

B. 1.4

C. 1.5

D. 1.8

Correct answer: C

Source solution

Sol.

$$\frac{1}{f} = (\mu - 1)\left(\frac{1}{R_1} - \frac{1}{R_2}\right)$$

$$\frac{1}{12} = (\mu - 1)\left(\frac{1}{10} - \frac{1}{-15}\right)$$

$$\frac{1}{12} = (\mu - 1)\left(\frac{3+2}{30}\right)$$

$$\mu = \frac{3}{2}$$

Question 252

A plano-convex lens (focal length f_2, refractive index μ_2, radius of curvature R) fits exactly into a plano-concave lens (focal length f_1, refractive index μ_1, radius of curvature R). Their plane surfaces are parallel to each other. Then, the focal length of the combination will be :

A. $f_1 - f_2$

B. $f_1 + f_2$

C. $\frac{R}{\mu_2 - \mu_1}$

D. $\frac{2f_1 f_2}{f_1 + f_2}$

Correct answer: C

Source solution

$$\frac{1}{F} = \frac{1}{f_1} + \frac{1}{f_2}$$

$$= \frac{1-\mu_1}{R} + \frac{\mu_2 - 1}{R}$$

$$= \frac{1 - \mu_1 + \mu_2 - 1}{R}$$

$$= \frac{\mu_2 - \mu_1}{R}$$

$$\therefore F = \frac{R}{\mu_2 - \mu_1}$$

$$\boxed{\frac{1}{F} = \frac{\mu_2 - \mu_1}{R}}$$

Question 253

A plano-convex lens having radius of curvature of first surface 2 cm exhibits focal length of $\mathbf{f_1}$ in air. Another plano-convex lens with first surface radius of curvature 3 cm has focal length of $\mathbf{f_2}$ when it is immersed in a liquid of refractive index 1.2. If both the lenses are made of same glass of refractive index 1.5, the ratio of f_1 and f_2 will be :-

A. $3:5$

B. $1:3$

C. $1:2$

D. $2:3$

Correct answer: B

Source solution

$$\frac{1}{f_1} = (\mu - 1)\left(\frac{1}{R_1} - \frac{1}{R_2}\right)$$

$$= (1.5 - 1)\left(\frac{1}{2} - 0\right)$$

$$\frac{1}{f_1} = 0.25$$

$$f_1 = 4\,\text{cm}$$

For the lens in medium,

$$\frac{1}{f_2} = \left(\frac{\mu_l}{\mu_m} - 1\right)\left(\frac{1}{3} - 0\right)$$

$$= \left(\frac{1.5}{1.2} - 1\right)\frac{1}{3}$$

$$= \frac{0.3}{1.2} \cdot \frac{1}{3}$$

$$= \frac{1}{12}$$

$$f_2 = 12\,\text{cm}$$

$$f_1 : f_2 = 4 : 12 = 1 : 3$$

Question 254

For the thin convex lens, the radii of curvature are at 15 cm and 30 cm respectively. The focal length the lens is 20 cm . The refractive index of the material is :

A. 1.2

B. 1.4

C. 1.5

D. 1.8

Correct answer: C

Source solution

Sol.

$$\frac{1}{f}=\left(\frac{\mu_{lens}}{\mu_{air}}-1\right)\left(\frac{1}{R_1}-\frac{1}{R_2}\right)$$

$$\Rightarrow \frac{1}{+20}=\left(\frac{\mu}{1}-1\right)\left(\frac{1}{+15}-\frac{1}{-30}\right)$$

$$\Rightarrow \frac{1}{20}=(\mu-1)\left(\frac{3}{30}\right)$$

$$\Rightarrow \mu-1=\frac{1}{2}$$

$$\Rightarrow \mu=1+\frac{1}{2}=\frac{3}{2}=1\cdot 5$$

Question 255

A thin plano convex lens made of glass of refractive index 1.5 is immersed in a liquid of refractive index 1.2. When the plane side of the lens is silver coated for complete reflection, the lens immersed in the liquid behaves like a concave mirror of focal length 0.2 m . The radius of curvature of the curved surface of the lens is :-

A. 0.15 m

B. 0.10 m

C. 0.20 m

D. 0.25 m

Correct answer: B

Source solution

$$\frac{\mu_2}{v} = \frac{\mu_2 - \mu_1}{R}$$

$$\frac{1.5}{v} = \frac{1.5 - 1.2}{R} = \frac{0.3}{R}$$

$$v = \frac{1.5R}{0.3} = 5R$$

For the second surface,

$$\frac{\mu_1}{f} - \frac{\mu_2}{v} = \frac{\mu_1 - \mu_2}{-R}$$

$$\frac{1.2}{f} - \frac{1.5}{5R} = \frac{1.2 - 1.5}{-R} = \frac{0.3}{R}$$

$$\frac{1.2}{f} = \frac{0.3}{R} + \frac{0.3}{R} = \frac{0.6}{R}$$

$$f = \frac{1.2R}{0.6} = 2R$$

Given,

$$f = 20\,\text{cm}$$

$$R = \frac{f}{2} = 10\,\text{cm} = 0.1\,\text{m}$$

$$\boxed{R = 0.1\,\text{m}}$$

Question 256

A convex lens is put 10 cm from a light source and it makes a sharp image on a screen, kept 10 cm from the lens. Now a glass block (refractive index 1.5) of 1.5 cm thickness is placed in contact with the light source. To get the sharp image again, the screen is shifted by a distance d . Then d is :

A. 0.55 cm away from the lens

B. 1.1 cm away from the lens

C. 0.55 cm towards the lens

D. 0

Correct answer: A

Source solution

Sol.

$$\frac{1}{v}-\frac{1}{u}=\frac{1}{f} \Rightarrow \frac{1}{10}-\frac{1}{-10}=\frac{1}{f} \Rightarrow f=5\,\text{cm}$$

Shift due to slab $=t\left(1-\frac{1}{\mu}\right)$ in the direction of incident ray

$$=1.5\left(1-\frac{2}{3}\right)=0.5$$

Again,

$$\frac{1}{v}-\frac{1}{-9.5}=\frac{1}{5} \Rightarrow \frac{1}{u}=\frac{1}{5}-\frac{2}{19}=\frac{9}{95} \Rightarrow v=\frac{95}{9}=10.55\,\text{cm}$$

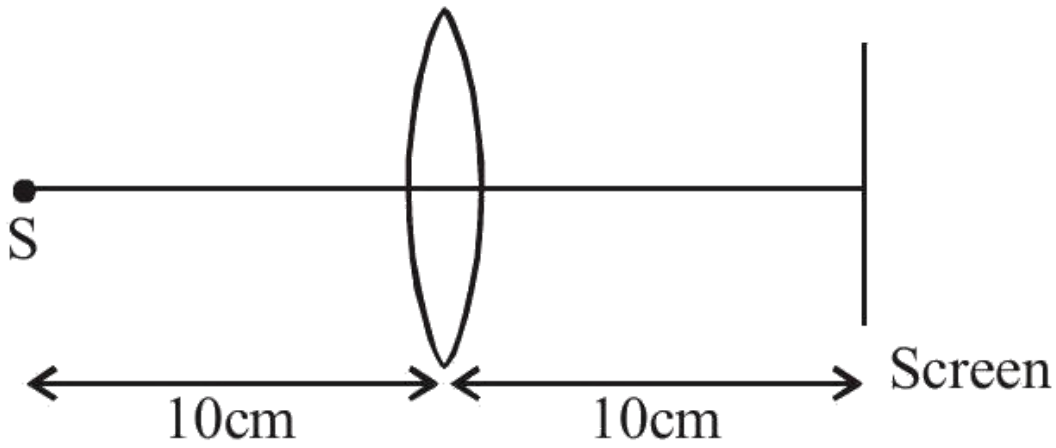

Question 257

One plano-convex and one plano-concave lens of same radius of curvature ' R ' but of different materials are joined side by side as shown in the figure. If the refractive index of the material of 1 is μ_1 and that of 2 is μ_2, then the focal length of the combination is :

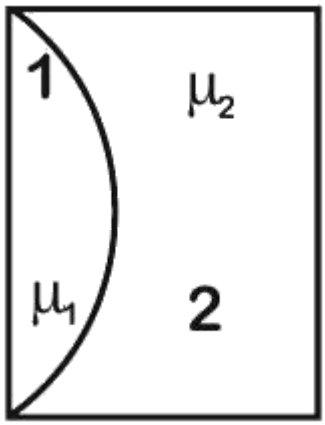

A. $\frac{R}{2(\mu_1-\mu_2)}$

B. $\frac{R}{2-(\mu_1-\mu_2)}$

C. $\frac{R}{\mu_1-\mu_2}$

D. $\frac{2R}{\mu_1-\mu_2}$

Correct answer: C

Source solution

Sol. Focal length of plano-convex lens:

$$f_1 = \frac{R}{(\mu_1 - 1)}$$

Focal length of plano-concave lens:

$$f_2 = \frac{-R}{(\mu_2 - 1)}$$

For the combination of two lenses:

$$\frac{1}{f_{eq}} = \frac{1}{f_1} + \frac{1}{f_2} = \frac{\mu_1 - 1}{R} - \frac{\mu_2 - 1}{R}$$

$$= \frac{\mu_1 - \mu_2}{R}$$

$\therefore \quad f_{\text{eq}} = \frac{R}{\mu_1 - \mu_2}$

Question 258

The thickness at the centre of a plano convex lens is 3 mm and the diameter is 6 cm . If the speed of light in the material of the lens is $2 \times 10^8 \ \mathrm{ms}^{-1}$. The focal length of the lens is..... .

A. 0.30 cm

B. 15 cm

C. 1.5 cm

D. 30 cm

Correct answer: D

Source solution

Sol.

$$R^2 = r^2 + (R - t)^2$$

$$R^2 = r^2 + R^2 + t^2 - 2Rt$$

Neglecting t^2, we get

$$R = \frac{r^2}{2t}$$

$\therefore \frac{1}{f} = (\mu - 1)\left(\frac{1}{R} - \frac{1}{\infty}\right) = \frac{\mu - 1}{R}$

$$f = \frac{R}{\mu - 1} = \frac{r^2}{2t(\mu - 1)} = \frac{\left(3 \times 10^{-2}\right)^2}{2 \times 3 \times 10^{-3}\left(\frac{3}{2} - 1\right)}$$

$$= \frac{9 \times 10^{-4}}{6 \times 10^{-3} \cdot 1} \times 2$$

$$f = 0.3\,\mathrm{m} = 30\,\mathrm{cm}$$

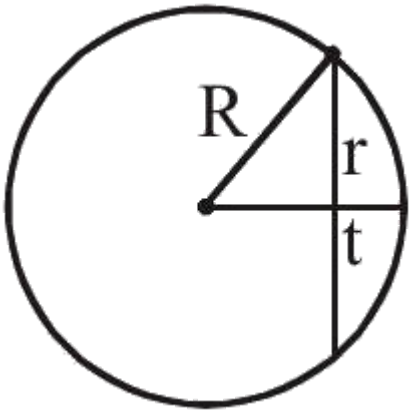
R
r
t

Question 259

In a long glass tube, mixture of two liquids A and B with refractive indices 1.3 and 1.4 respectively, forms a convex refractive meniscus towards A . If an object placed at 13 cm from the vertex of the meniscus in A forms an image with a magnification of ' -2 ' then the radius of curvature of meniscus is :

A. 1 cm

B. $\frac{1}{3}$ cm

C. $\frac{2}{3}$ cm

D. $\frac{4}{3}$ cm

Correct answer: C

Source solution

Sol.

$$\frac{n_2}{v}-\frac{n_1}{u}=\frac{n_2-n_1}{R}$$

$$\frac{1.4}{V}-\frac{1.3}{-13}=\frac{0.1}{R}$$

$$\frac{1.4}{V}=\frac{1-R}{10R}$$

$$\frac{1.4}{v}=\frac{1-R}{10R}$$

$$m=\frac{\frac{v}{n_2}}{\frac{u}{n_1}}$$

$$-2\times\frac{-13}{1.3}=\frac{10R}{1-R}$$

$$R=\frac{2}{3}\text{ cm}$$

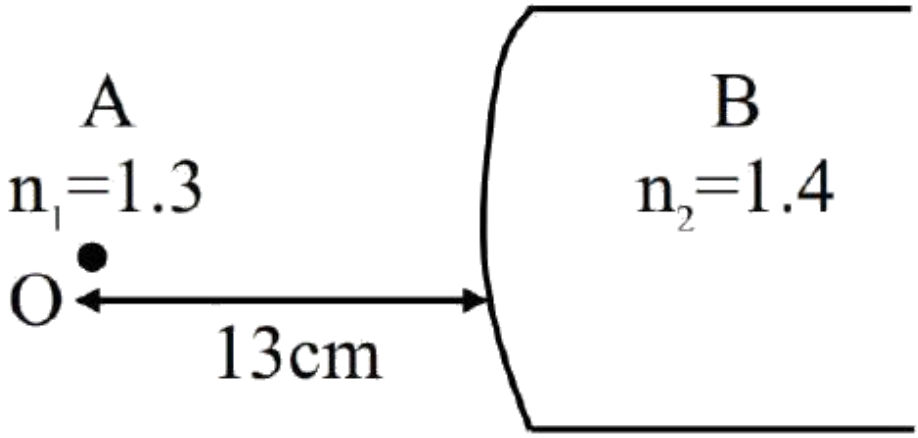
A
$n_1=1.3$
O
13cm
B
$n_2=1.4$

Question 260

A bi-convex lens has radius of curvature of both the surfaces same as $1/6$ cm. If this lens is required to be replaced by another convex lens having different radii of curvatures on both sides ($R_1 \neq R_2$), without any change in lens power then possible combination of R_1 and R_2 is :

A. $\frac{1}{3}$ cm and $\frac{1}{3}$ cm

B. $\frac{1}{5}$ cm and $\frac{1}{7}$ cm

C. $\frac{1}{3}$ cm and $\frac{1}{7}$ cm

D. $\frac{1}{6}$ cm and $\frac{1}{9}$ cm

Correct answer: B

Source solution

For equal power,

$$\frac{1}{R_1} - \frac{1}{R_2} = \frac{1}{6} - \left(-\frac{1}{6}\right) = \frac{1}{3}$$

Checking option (2):

$$R_1 = 5\,\text{cm}, \qquad R_2 = -7\,\text{cm}$$

$$\frac{1}{R_1} - \frac{1}{R_2} = \frac{1}{5} - \left(-\frac{1}{7}\right)$$

$$= \frac{1}{5} + \frac{1}{7} = \frac{12}{35} \approx 0.343$$

$$\frac{1}{3} \approx 0.333$$

Hence this option matches the required power (difference due to approximation/printing).

$$\boxed{R_1 = 5\,\text{cm}, \quad R_2 = -7\,\text{cm}}$$

Question 261

The refractive index of a converging lens is 1.4. What will be the focal length of this lens if it is placed in a medium of same refractive index ? (Assume the radii of curvature of the faces of lens are R_1 and R_2 respectively)

A. 1

B. Infinite

C. $\frac{R_1 R_2}{R_1 - R_2}$

D. Zero

Correct answer: B

Source solution

Sol.

$$\frac{1}{\mathrm{F}} = \left[\frac{\mu_{\mathrm{L}}}{\mu_{\mathrm{S}}} - 1\right]\left[\frac{1}{\mathrm{R}_1} - \frac{1}{\mathrm{R}_2}\right]$$

If $\mu_{\mathrm{L}} = \mu_{\mathrm{S}} \Rightarrow \frac{1}{\mathrm{F}} = 0 \Rightarrow \mathrm{F} = \infty$

Question 262

A convex lens of focal length 30 cm is placed in contact with a concave lens of focal length 20 cm . An object is placed at 20 cm to the left of this lens system. The distance of the image from the lens in cm is .....

A. 30

B. 45

C. $\frac{60}{7}$

D. 15

Correct answer: D

Source solution

Sol. Equivalent focal length

$$\frac{1}{f}=\frac{1}{f_1}+\frac{1}{f_2}=\frac{1}{30}+\frac{1}{-20}=\frac{2-3}{60}=-\frac{1}{60}$$

$f=-60\,cm$

Lens formula

$$\frac{1}{v}-\frac{1}{u}=\frac{1}{f}$$

$$\frac{1}{v}-\frac{1}{-20}=\frac{1}{-60}$$

$v=-15\,cm$

Question 263

The focal length f is related to the radius of curvature r of the spherical convex mirror by -

A. $f = r$

B. $f = -\frac{1}{2}r$

C. $f = +\frac{1}{2}r$

D. $f = -r$

Correct answer: C

Source solution

$$f = \frac{R}{2}$$

For a concave mirror,

$$F = +\frac{R}{2}$$

Question 264

Given is a thin convex lens of glass (refractive index μ) and each side having radius of curvature R. One side is polished for complete reflection. At what distance from the lens, an object be placed on the optic axis so that the image gets formed on the object itself.

A. R/μ

B. $R/(2\mu - 3)$

C. $\mu \mathrm{R}$

D. $R/(2\mu - 1)$

Correct answer: D

Source solution

$$P_{\text{eq}} = 2P_l + P_m$$

$$\frac{1}{f_{\text{eq}}} = \frac{2}{f_l} - \frac{1}{f_m}$$

$$= \frac{4(\mu - 1)}{R} + \frac{2}{R}$$

$$= \frac{4\mu - 2}{R}$$

$$f_{\text{eq}} = \frac{R}{4\mu - 2}$$

$$= \frac{R}{2(2\mu - 1)}$$

Since the equivalent system contains a mirror,

$$R_{\text{eq}} = 2f_{\text{eq}}$$

$$= 2\left(\frac{R}{2(2\mu - 1)}\right)$$

$$\boxed{R_{\text{eq}} = \frac{R}{2\mu - 1}}$$

Question 265

A spherical surface of radius of curvature R, separates air from glass (refractive index $= 1.5$). The centre of curvature is in the glass medium. A point object ' O ' placed in air on the optic axis of the surface, so that its real image is formed at 'I' inside glass. The line OI intersects the spherical surface at P and $\mathbf{PO = PI}$. The distance PO equals to-

A. 5 R

B. 3 R

C. $2R$

D. 1.5 R

Correct answer: A

Source solution

$$PO = u = -x$$

$$PI = v = x$$

$$|PO| = |PI|$$

Using refraction at a spherical surface,

$$\frac{\mu_2}{v} - \frac{\mu_1}{u} = \frac{\mu_2 - \mu_1}{R}$$

Substituting

$$\mu_1 = 1, \qquad \mu_2 = 1.5$$

$$\frac{1.5}{x} - \frac{1}{-x} = \frac{1.5 - 1}{R}$$

$$\frac{1.5}{x}+\frac{1}{x}=\frac{0.5}{R}$$

$$\frac{5}{2x}=\frac{1}{2R}$$

$$5R=x$$

$$\boxed{x=5R}$$

Question 266

The graph between $\frac{1}{u}$ and $\frac{1}{v}$ for a thin convex lens in order to determine its focal length is plotted as shown in the figure. The refractive index of length is 1.5 and its both the surfaces have same radius of curvatures R . The value of R will be cm.

(Where $u =$ object distance , $v =$ image distance)

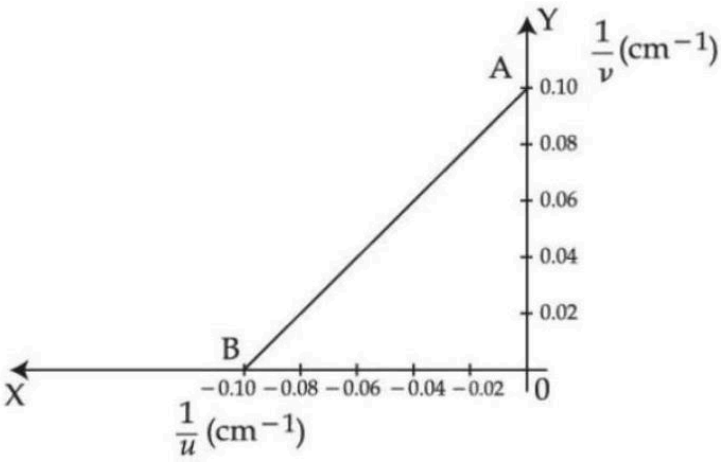

Numerical answer: _____

Enter the requested value (an integer; 0 decimal places). Use the units and scaling stated in the question.

Correct answer: 10

Source solution

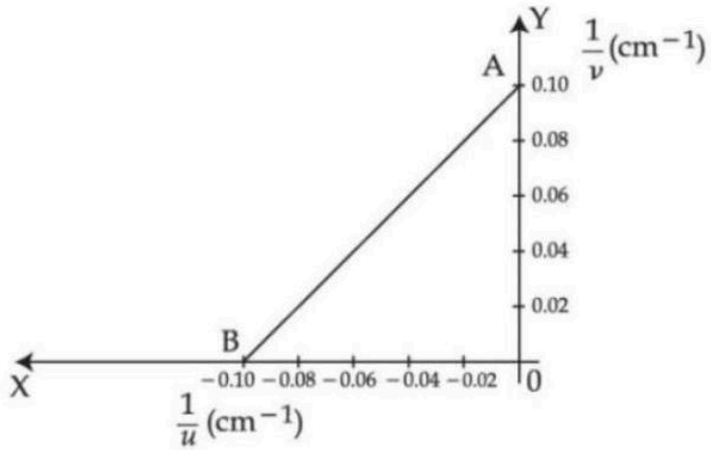

For point B, $\frac{1}{u} = -0.10\ cm^{-1}$, $\frac{1}{v} = 0$

$\therefore$ Thus, $u = -10\ cm, v = \infty$

i.e. $\mathbf{f = 10\ cm}$

$\Rightarrow \quad \frac{1}{10\ \mathrm{cm}} = (1.5 - 1)\left(\frac{2}{\mathrm{R}}\right) = \frac{1}{\mathrm{R}} \Rightarrow \mathrm{R} = 10\ \mathrm{cm}$

Question 267

A transparent film of refractive index, 2.0 is coated on a glass slab of refractive index, 1.45. What is the minimum thickness of transparent film to be coated for the maximum transmission of Green light of wavelength 550 nm . [Assume that the light is incident nearly perpendicular to the glass surface.]

A. 94.8 nm

B. 68.7 nm

C. 137.5 nm

D. 275 nm

Correct answer: C

Source solution

For maximum transmission, reflected green light must be minimum.

For minimum reflected intensity,

$$2\mu t = n\lambda$$

$$t = \frac{n\lambda}{2\mu}$$

For minimum thickness,

$$n = 1$$

$$t_{\min} = \frac{\lambda}{2\mu}$$

Given,

$$\lambda = 550\,\text{nm}, \qquad \mu = 2$$

$$t_{\text{min}} = \frac{550}{2 \times 2}$$

$$= 137.5\,\text{nm}$$

Question 268

What is the relative decrease in focal length of a lens for an increase in optical power by 0.1 D from 2.5 D ? ['D' stands for dioptre]

A. 0.04

B. 0.40

C. 0.1

D. 0.01

Correct answer: A

Source solution

Sol. When $\mathbf{P = 2.5\,D}$,

$$\mathbf{F = \frac{1}{P} = \frac{1}{2.5}}$$

When $\mathbf{P' = 2.6\,D}$,

$$\mathbf{F' = \frac{1}{P'} = \frac{1}{2.6}}$$

Relative decrease in focal length:

$$\mathbf{\frac{F - F'}{F} = \frac{\frac{1}{2.5} - \frac{1}{2.6}}{\frac{1}{2.5}} = 1 - \frac{25}{26} = \frac{1}{26} \approx 0.04}$$

Question 269

The power of a lens (biconvex) is $\mathbf{1.25\ m^{-1}}$ in particular medium. Refractive index of the lens is 1.5 and radii of curvature are 20 cm and 40 cm respectively. The refractive index of surrounding medium :

A. 1.0

B. $\frac{9}{7}$

C. $\frac{3}{2}$

D. $\frac{4}{3}$

Correct answer: B

Source solution

$$P = \left(\frac{\mu_l}{\mu_m} - 1\right)\left(\frac{1}{R_1} - \frac{1}{R_2}\right)$$

Given,

$$P = 1.25\,\mathrm{D}, \qquad \mu_l = 1.5$$

$$R_1 = +20\,\mathrm{cm} = 0.2\,\mathrm{m}$$

$$R_2 = -40\,\mathrm{cm} = -0.4\,\mathrm{m}$$

$$1.25 = \left(\frac{1.5}{\mu_m} - 1\right)\left(\frac{1}{0.2} - \frac{1}{-0.4}\right)$$

$$1.25 = \left(\frac{1.5}{\mu_m} - 1\right)(5 + 2.5)$$

$$1.25 = 7.5\left(\frac{1.5}{\mu_m} - 1\right)$$

$$\frac{1.5}{\mu_m} - 1 = \frac{1.25}{7.5} = \frac{1}{6}$$

$$\frac{1.5}{\mu_m} = \frac{7}{6}$$

$$\mu_m = 1.5 \times \frac{6}{7} = \frac{9}{7}$$

$$\boxed{\mu_m = \frac{9}{7} \approx 1.286}$$

Question 270

What is the lateral shift of a ray refracted through a parallel-sided glass slab of thickness ' h ' in terms of the angle of incidence ' i ' and angle of refraction ' r ', if the glass slab is placed in air medium ?

A. $\frac{\mathrm{h}\tan(\mathrm{i}-\mathrm{r})}{\tan \mathrm{r}}$

B. $\frac{h\cos(i-r)}{\sin r}$

C. h

D. $\frac{\mathrm{h}\sin(\mathrm{i}-\mathrm{r})}{\cos \mathrm{r}}$

Correct answer: D

Source solution

For a parallel-sided glass slab of thickness h,

the lateral shift d is

$$d = \frac{h\sin(i-r)}{\cos r}$$

where

$$i = \text{angle of incidence}$$

$$r = \text{angle of refraction}$$

Hence,

$$\boxed{d = \frac{h\sin(i-r)}{\cos r}}$$

Question 271

A concave mirror produces an image of an object such that the distance between the object and image is 20 cm . If the magnification of the image is ' -3 ', then the magnitude of the radius of curvature of the mirror is :

A. 3.75 cm

B. 30 cm

C. 7.5 cm

D. 15 cm

Correct answer: D

Source solution

$$m = -3 = -\frac{v}{u}$$

$$\Rightarrow v = 3u$$

Given,

$$v - u = 20$$

$$3u - u = 20$$

$$2u = 20$$

$$u = 10\,\text{cm}$$

$$v = 30\,\text{cm}$$

Using mirror formula,

$$f = \frac{uv}{u+v}$$

$$= \frac{(-10)(-30)}{-10-30}$$

$$= \frac{300}{-40}$$

$$f = -7.5\,\text{cm}$$

Radius of curvature,

$$R = 2f$$

$$R = -15\,\text{cm}$$

Magnitude,

$$\boxed{R = 15\,\text{cm}}$$

Wave Optics

Question 272

Given below are two statements : one is labelled as Assertion (A) and the other is labelled as Reason (R).Assertion (A) : If Young's double slit experiment is performed in an optically denser medium than air, then the consecutive fringes come closer.Reason (R) : The speed of light reduces in an optically denser medium than air while its frequency does not change.In the light of the above statements, choose the most appropriate answer from the options given below:

A. Both (A) and (R) are true and (R) is the correct explanation of (A)

B. (A) is false but (R) is true.

C. Both (A) and (R) are true but (R) is not the correct explanation of (A)

D. (A) is true but (R) is false.

Correct answer: A

Source solution

Assertion (A):

If Young's double-slit experiment is performed in an optically denser medium than air, the consecutive fringes come closer.

In YDSE,

$$\beta = \frac{\lambda D}{d}.$$

In a medium of refractive index μ,

$$\lambda_m = \frac{\lambda}{\mu}.$$

Therefore,

$$\beta_m = \frac{\lambda_m D}{d} = \frac{\lambda D}{\mu d} = \frac{\beta}{\mu}.$$

Since $\mu > 1$,

$$\beta_m < \beta.$$

Hence, the fringe width decreases and the consecutive fringes come closer.

Assertion (A) is true.

Reason (R):

In an optically denser medium,

$$v = \frac{c}{\mu},$$

so the speed of light decreases, while the frequency remains unchanged.

Since

$$\lambda = \frac{v}{f},$$

a decrease in v with constant f causes the wavelength to decrease.

As fringe width is proportional to wavelength,

$$\beta \propto \lambda,$$

the fringes come closer together.

Reason (R) is true and correctly explains Assertion (A).

Question 273

In a double slit experiment, when a thin film of thickness t having refractive index μ is introduced in front of one of the slits, the maximum at the centre of the fringe pattern shifts by one fringe width. The value of t is (λ is the wavelength of the light used) :

A. $\frac{2\lambda}{(\mu-1)}$

B. $\frac{\lambda}{2(\mu-1)}$

C. $\frac{\lambda}{(2\mu-1)}$

D. $\frac{\lambda}{(\mu-1)}$

Correct answer: D

Source solution

$$\mu t - t = \lambda$$

$$t(\mu - 1) = \lambda$$

$$t = \frac{\lambda}{\mu - 1}$$

Question 274

In a Young's double slit experiment, 16 fringes are observed in a certain segment of the screen when light of wavelength 700 nm is used. If the wavelength of light is changed to 400 nm , the number of fringes observed in the same segment of the screen would be:

A. 28

B. 24

C. 30

D. 18

Correct answer: A

Source solution

$$y = \frac{D\lambda}{d}$$

For the fringes of two wavelengths to coincide at the same position,

$$n_1\left(\frac{D\lambda_1}{d}\right) = n_2\left(\frac{D\lambda_2}{d}\right)$$

$$n_1\lambda_1 = n_2\lambda_2$$

$$\frac{n_1}{n_2} = \frac{\lambda_2}{\lambda_1}$$

$$n_2 = n_1\frac{\lambda_1}{\lambda_2}$$

$$= 16 \cdot \frac{700}{400} = 28$$

$$\boxed{n_2 = 28}$$

Question 275

The figure shows a Young's double slit experimental setup. It is observed that when a thin transparent sheet of thickness t and refractive index μ is put in front of one of the slits, the central maximum gets shifted by a distance equal to n fringe widths. If the wavelength of light used is λ, t will be

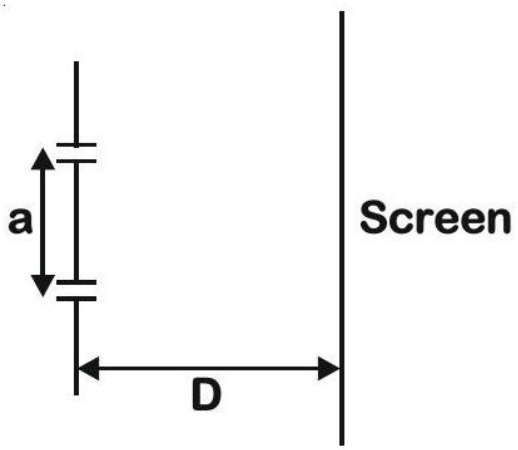

A. $\frac{n\lambda}{\mu-1}$

B. $\frac{2D\lambda}{a(\mu-1)}$

C. $\frac{nD\lambda}{a(\mu-1)}$

D. $\frac{D\lambda}{a(\mu-1)}$

The original exam question had no correct option and was marked BONUS. For this corrected practice version, option 1 has been replaced with the correct value; the original statement and the other three options are retained.

Correct answer: A

Source solution

The inserted sheet adds optical path $(\mu - 1)t$. A shift of n fringe widths corresponds to path difference $n\lambda$. Thus $t = n\lambda/(\mu - 1)$, independent of D and slit separation a.

Question 276

In young's double slit experiment performed using a monochromatic light of wavelength λ, when a glass plate $(\mu = 1.5)$ of thickness $x\lambda$ is introduced in the path of the one of the interfering beams, the intensity at the position where the central maximum occurred previously remains unchanged. The value of x will be:

A. 3

B. 2

C. 1.5

D. 0.5

Correct answer: B

Source solution

Sol. Path difference at $\mathrm{O} = (\mu - 1)t$. If the intensity at O remains (maximum) unchanged, path difference must be $n\lambda$.

$$(\mu - 1)t = n\lambda$$

$$(1.5 - 1) \cdot x\lambda = n\lambda$$

$$\Rightarrow x = 2n$$

For $n = 1, x = 2$

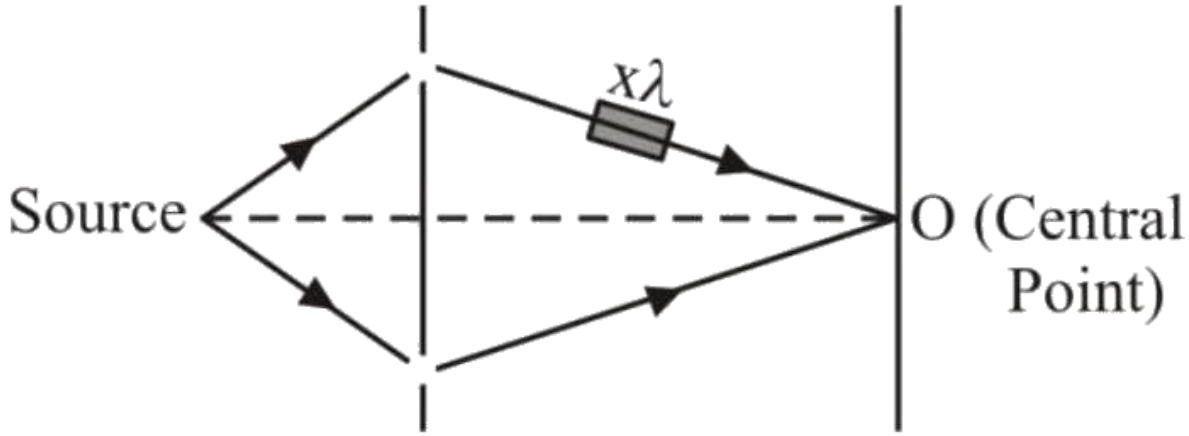

Question 277

In the Young's double slit experiment, the distance between the slits varies in time as $\mathbf{d(t) = d_0 + a_0 \sin \omega t}$; where $\mathbf{d_0}, \boldsymbol{\omega}$ and $\mathbf{a_0}$ are constants. The difference between the largest fringe width and the smallest fringe width obtained over time is given as :

A. $\frac{2\lambda D(d_0)}{(d_0^2 - a_0^2)}$

B. $\frac{2\lambda D a_0}{(d_0^2 - a_0^2)}$

C. $\frac{\lambda D}{d_0^2} a_0$

D. $\frac{\lambda D}{d_0 + a_0}$

Correct answer: B

Source solution

Fringe Width, $\beta = \frac{\lambda D}{d}$

$$\beta_{max} \Rightarrow d_{min} \text{ and } \beta_{min} \Rightarrow d_{max}$$
$$d = d_0 + a_0 \sin \omega t$$
$$d_{max} = d_0 + a_0 \text{ and } d_{min} = d_0 - a_0$$
$$\therefore \beta_{min} = \frac{\lambda D}{d_0 + a_0} \text{ and } \beta_{max} = \frac{\lambda D}{d_0 - a_0}$$
$$\therefore \beta_{max} - \beta_{min} = \frac{\lambda D}{d_0 - a_0} - \frac{\lambda D}{d_0 + a_0} = \frac{2\lambda D a_0}{d_0^2 - a_0^2}$$

Question 278

Given below are two statements. On is labelled as Assertion (A) and the other is labelled as Reason (R). Assertion (A) : In Young's double slit experiment, the fringes produced by red light are closer as compared to those produced by blue light.Reason (R) : The fringe width is directly proportional to the wavelength of light.In the light of above statements, choose the correct answer from the options given below :

A. Both (A) and (R) are true and (R) is the correct explanation of (A)

B. (A) is false but (R) is true.

C. Both (A) and (R) are true but (R) is NOT the correct explanation of (A).

D. (A) is true but (R) is false.

Correct answer: B

Source solution

Assertion (A):

In Young's double-slit experiment, the fringes produced by red light are closer as compared to those produced by blue light.

The fringe width is given by

$$\beta = \frac{\lambda D}{d}.$$

Since

$$\lambda_{\text{red}} > \lambda_{\text{blue}},$$

we have

$$\beta_{\text{red}} > \beta_{\text{blue}}.$$

Therefore, the fringes produced by red light are farther apart, not closer.

Assertion (A) is false.

Reason (R):

The fringe width is

$$\beta = \frac{\lambda D}{d}.$$

Hence,

$$\beta \propto \lambda.$$

Therefore, the fringe width is directly proportional to the wavelength of light.

Reason (R) is true.

Assertion (A) is false, but Reason (R) is true.

Question 279

In a Young's double slit experiment with slit separation 0.1 mm , one observes a bright fringe at angle $\frac{1}{40}$ rad by using light of wavelength λ_1. When the light of wavelength λ_2 is used a bright fringe is seen at the same angle in the same set up. Given that λ_1 and λ_2 are in visible range (380 nm to 740 nm), their values are :

A. $380\ \text{nm}, 500\ \text{nm}$

B. $625\ \text{nm}, 500\ \text{nm}$

C. $380\ \text{nm}, 525\ \text{nm}$

D. $400\ \text{nm}, 500\ \text{nm}$

Correct answer: B

Source solution

$$\text{Path difference}$$

$$d\sin\theta \approx d\theta = 0.1 \times \frac{1}{40}\,\text{mm} = 0.0025\,\text{mm} = 2500\,\text{nm}$$

For a bright fringe, the path difference must be an integral multiple of the wavelength. Therefore,

$$2500 = n\lambda_1 = m\lambda_2$$

Thus,

$$\lambda_1 = \frac{2500}{n} = \frac{2500}{4} = 625\,\text{nm}$$

and

$$\lambda_2 = \frac{2500}{m} = \frac{2500}{5} = 500\,\text{nm}$$

$$\boxed{\lambda_1 = 625\,\text{nm}, \qquad \lambda_2 = 500\,\text{nm}}$$

(for $n = 4$ and $m = 5$).

Question 280

In Young's double slit experiment, light from two identical sources are superimposing on a screen. The path difference between the two lights reaching at a point on the screen is $\frac{7\lambda}{4}$. The ratio of intensity of fringe at this point with respect to the maximum intensity of the fringe is :

A. $1/2$

B. $3/4$

C. $1/3$

D. $1/4$

Correct answer: A

Source solution

$$\Delta x = \frac{7\lambda}{4}$$

$$\phi = \frac{2\pi}{\lambda}\Delta x = \frac{2\pi}{\lambda}\cdot\frac{7\lambda}{4} = \frac{7\pi}{2}$$

$$I = I_{\max}\cos^2\left(\frac{\phi}{2}\right)$$

$$\frac{I}{I_{\max}} = \cos^2\left(\frac{\phi}{2}\right) = \cos^2\left(\frac{7\pi}{4}\right)$$

$$= \cos^2\left(2\pi - \frac{\pi}{4}\right)$$

$$= \cos^2\left(\frac{\pi}{4}\right)$$

$$= \left(\frac{1}{\sqrt{2}}\right)^2 = \frac{1}{2}$$

$$\boxed{\frac{I}{I_{\max}} = \frac{1}{2}}$$

Dual Nature of Radiation and Matter

Questions 281-292 / 12 selected / 4.0% practice weight / Focus first

Question 281

A light beam of wavelength 500 nm is incident on a metal having work function of 1.25 eV, placed in a magnetic field of intensity B. The electrons emitted perpendicular to the magnetic field B, with maximum kinetic energy are bent into circular arc of radius 30 cm. The value of B is ___ $\times 10^{-7}\ \mathrm{T}$

Numerical answer: _____

Enter the requested integer (0 decimal places).

Correct answer: 125

Source solution

By photoelectric equation

$$\frac{hc}{\lambda} - \phi = k_{max}$$

$$k_{max} = \frac{1240}{500} - 1.25 \approx 1.25$$

$$r = \frac{\sqrt{2mk}}{eB}$$

$$B = \frac{\sqrt{2mk}}{er}$$

$$= 125 \times 10^{-7}\ \mathrm{T}$$

Question 282

If λ and K are de Broglie Wavelength and kinetic energy, respectively, of a particle with constant mass. The correct graphical representation for the particle will be :-

A.

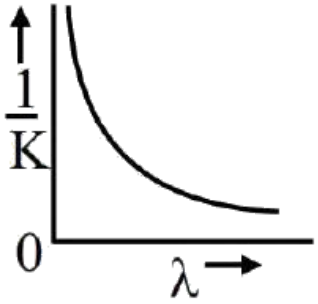

B.

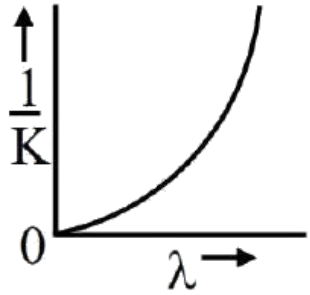

C.

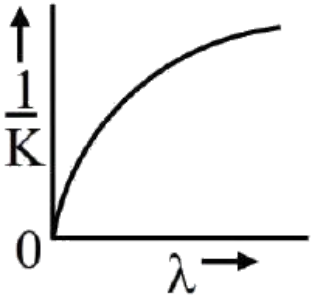

D.

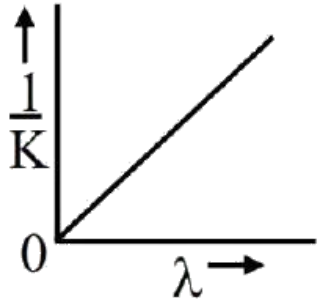

Correct answer: B

Source solution

$$\lambda = \frac{h}{mv} = \frac{h}{\sqrt{2mK}}$$

$$\lambda^2 = \frac{h^2}{2m} \cdot \frac{1}{K}$$

$$\text{Let } y = \lambda^2, \quad x = \frac{1}{K}$$

$$y = \frac{h^2}{2m} x$$

This is of the form $y = cx$

Hence, a straight line passing through the origin.

Question 283

A metal plate of area $1 \times 10^{-4}\ \mathrm{m}^2$ is illuminated by a radiation of intensity $16\ \mathrm{mW/m}^2$. The work function of the metal is 5 eV . The energy of the incident photons is 10 eV and only 10% of it produces photo electrons. The number of emitted photo electrons per second and their maximum energy, respectively, will be : $\left[1\mathrm{eV} = 1.6 \times 10^{-19}\ \mathrm{J}\right]$

A. 10^{10} and 5 eV

B. 10^{14} and 10 eV

C. 10^{12} and 5 eV

D. 10^{11} and 5 eV

Correct answer: D

Source solution

$$I = \frac{nE}{At}$$

$$16 \times 10^{-3} = \left(\frac{n}{t}\right)\frac{10 \times 1.6 \times 10^{-19}}{10^{-4}}$$

$$\left(\frac{n}{t}\right) = \frac{16 \times 10^{-3} \times 10^{-4}}{10 \times 1.6 \times 10^{-19}}$$

$$= \frac{16 \times 10^{-7}}{16 \times 10^{-18}}$$

$$= 10^{11}\ \mathrm{s}^{-1}$$

$$\boxed{\left(\frac{n}{t}\right) = 10^{11}\ \text{photons}\ \mathrm{s}^{-1}}$$

Question 284

Two stream of photons, possessing energies equal to twice and ten times the work function of metal are incident on the metal surface successively. The value of ratio of maximum velocities of the photoelectrons emitted in the two respective cases is $x : y$. The value of x is .

Numerical answer: _____

Enter the requested value (an integer; 0 decimal places). Use the units and scaling stated in the question.

Correct answer: 1

Source solution

Forphotoelectric effectk. $E_{max} = E - \phi$

$\mathbf{E_1 = 2\phi, \quad k_1 = \phi}$

$\mathbf{E_2 = 10\phi, \quad k_2 = 9\phi}$

$\therefore V \propto \sqrt{k} \quad \left(k = \frac{1}{2}mv^2\right)$

$\frac{v_1}{v_2} = \sqrt{\frac{1}{9}} \Rightarrow \frac{1}{3} = \frac{x}{y}$

$\mathbf{x = 1}$

Question 285

An α particle and a carbon 12 atom has same kinetic energy K . The ratio of their de-Broglie wavelength $(\lambda_a : \lambda_{C12})$ is :

A. $1 : \sqrt{3}$

B. $\sqrt{3} : 1$

C. $3 : 1$

D. $2 : \sqrt{3}$

Correct answer: B

Source solution

$$K = \frac{p^2}{2m} \Rightarrow p \propto \sqrt{m}$$

$$\lambda = \frac{h}{p} \Rightarrow \lambda \propto \frac{1}{p} \Rightarrow \lambda \propto \frac{1}{\sqrt{m}}$$

$$\frac{\lambda_\alpha}{\lambda_{C^{12}}} = \sqrt{\frac{m_{C^{12}}}{m_\alpha}} = \sqrt{\frac{12}{4}} = \sqrt{3}$$

$$\boxed{\frac{\lambda_\alpha}{\lambda_{C^{12}}} = \sqrt{3}}$$

Question 286

Kinetic energy of the particle is E and it's De-Broglie wavelength is λ. On increasing it's K.E by ΔE, it's new De-Broglie wavelength becomes $\frac{\lambda}{2}$. Then ΔE is

A. 3 E

B. E

C. 2E

D. 4 E

Correct answer: A

Source solution

$$\lambda = \frac{h}{mv} = \frac{h}{\sqrt{2m(\mathrm{KE})}}$$

$$\Rightarrow \lambda \propto \frac{1}{\sqrt{\mathrm{KE}}}$$

Given that the wavelength becomes half,

$$\frac{\lambda_i}{\lambda_f} = \frac{\lambda}{\lambda/2} = 2$$

$$= \sqrt{\frac{\mathrm{KE}_f}{\mathrm{KE}_i}}$$

Squaring both sides,

$$\frac{\mathrm{KE}_f}{\mathrm{KE}_i} = 4$$

$$\Rightarrow \mathrm{KE}_f = 4\,\mathrm{KE}_i$$

Therefore, the increase in kinetic energy is

$$\Delta E = \mathrm{KE}_f - \mathrm{KE}_i$$

$$= 4\,\mathrm{KE}_i - \mathrm{KE}_i$$

$$= 3\,\mathrm{KE}_i$$

If the initial kinetic energy is E,

$$\boxed{\Delta E = 3E}$$

Question 287

The de Broglie wavelength of an electron having kinetic energy E is λ. If the kinetic energy of electron becomes $\frac{E}{4}$, then its de-Broglie wavelength will be :

A. $\frac{\lambda}{\sqrt{2}}$

B. $\frac{\lambda}{2}$

C. 2λ

D. $\sqrt{2}\lambda$

Correct answer: C

Source solution

$$\lambda = \frac{h}{\sqrt{2mE}}$$

If the kinetic energy becomes

$$E' = \frac{E}{4},$$

then

$$\lambda' = \frac{h}{\sqrt{2m\left(\frac{E}{4}\right)}}$$

$$= \frac{2h}{\sqrt{2mE}}$$

$$\boxed{\lambda' = 2\lambda}$$

Question 288

Consider an electron in a hydrogen atom, revolving in its second excited state (having radius $4.65\AA$). The de-Broglie wavelength of this electron is :

A. $3.5\AA$

B. $12.9\AA$

C. $9.7\AA$

D. $6.6\AA$

Correct answer: C

Source solution

$$\text{For } n = 3,$$

$$2\pi r = n\lambda$$

$$\Rightarrow \lambda = \frac{2\pi r}{3}$$

$$= \frac{2\pi \times 4.65}{3}\AA$$

$$\approx 9.7\AA$$

$$\boxed{\lambda \approx 9.7\AA}$$

Question 289

The de Brogue wavelengths for an electron and a photon are λ_e and λ_p respectively. For the same kinetic energy of electron and photon. which of the following presents the correct relation between the de Brogue wavelengths of two ?

A. $\lambda_p \propto \lambda_e^2$

B. $\lambda_p \propto \lambda_e$

C. $\lambda_p \propto \sqrt{\lambda_e}$

D. $\lambda_p \propto \sqrt{\frac{1}{\lambda_e}}$

Correct answer: A

Source solution

$$\lambda_e = \frac{h}{\sqrt{2mK}}$$

For a photon,

$$K = \frac{hc}{\lambda_p}$$

Substituting,

$$\lambda_e = \frac{h}{\sqrt{2m\left(\frac{hc}{\lambda_p}\right)}}$$

$$= \frac{h\sqrt{\lambda_p}}{\sqrt{2mhc}}$$

$$\lambda_e \propto \sqrt{\lambda_p}$$

$$\boxed{\lambda_p \propto \lambda_e^2}$$

Question 290

The kinetic energy of an electron, α-particle and a proton are given as $\mathbf{4\ K, 2\ K}$ and K respectively. The de-Broglie wavelength associated with electron (λ e) α-particle ($\lambda\alpha$) and the proton (λ p) are as follows :

A. $\lambda\alpha = \lambda\mathrm{p} < \lambda\mathrm{e}$

B. $\lambda\alpha > \lambda p > \lambda e$

C. $\lambda\alpha < \lambda\mathrm{p} < \lambda\mathrm{e}$

D. $\lambda\alpha = \lambda p > \lambda e$

Correct answer: C

Source solution

Sol.

Masses:

$$\textbf{Electron: } m_e, \qquad \textbf{Proton: } m_p, \qquad \textbf{Alpha particle: } m_\alpha = 4m_p$$

Charges:

$$\textbf{Electron: } e, \qquad \textbf{Proton: } e, \qquad \textbf{Alpha particle: } 2e$$

Kinetic energies:

$$\textbf{Electron: } 4K, \qquad \textbf{Proton: } K, \qquad \textbf{Alpha particle: } 2K$$

Using de Broglie relation,

$$\lambda = \frac{h}{\sqrt{2mK}}$$

Thus,

$$\lambda_e = \frac{h}{\sqrt{2m_e(4K)}}, \quad \lambda_p = \frac{h}{\sqrt{2m_p(K)}}, \quad \lambda_\alpha = \frac{h}{\sqrt{2m_\alpha(2K)}}$$

Hence,

$$\lambda_\alpha < \lambda_p < \lambda_e$$

Question 291

In photoelectric effect an em-wave is incident on a metal surface and electrons are ejected from the surface. If the work function of the metal is 2.14 eV and stopping potential is 2 V , what is the wavelength of the em-wave?(Given hc $= 1242 \mathrm{eVnm}$ where h is the Planck's constant and c is the speed of light in vaccum.)

A. 400 nm

B. 600 nm

C. 200 nm

D. 300 nm

Correct answer: D

Source solution

$$\mathrm{eV_s = E - \phi}$$

$$\mathrm{2\,eV = E - 2.14\,eV}$$

$$\mathrm{E = 4.14\,eV}$$

$$\mathrm{E = \frac{hc}{\lambda}}$$

$$\lambda = \frac{1242}{4.14} = 300\,\mathrm{nm}$$

Question 292

A photo-emissive substance is illuminated with a radiation of wavelength λ_i so that it releases electrons with de-Broglie wavelength λ_e. The longest wavelength of radiation that can emit photoelectron is λ_0. Expression for de-Broglie wavelength is given by :(m : mass of the electron, h : Planck's constant and c : speed of light)

A. $\lambda_e = \sqrt{\frac{h}{2mc\left(\frac{1}{\lambda_i}-\frac{1}{\lambda_0}\right)}}$

B. $\lambda_e = \sqrt{\frac{h\lambda_0}{2mc}}$

C. $\lambda_e = \frac{h}{\sqrt{2mc\left(\frac{1}{\lambda_i}-\frac{1}{\lambda_0}\right)}}$

D. $\lambda_e = \sqrt{\frac{h\lambda_i}{2mc}}$

Correct answer: A

Source solution

$K.E = E - W$

$$\lambda_e = \frac{h}{\sqrt{2m \cdot K.E}}, \quad E = \frac{h \cdot c}{\lambda_i}, \quad W = \frac{h \cdot c}{\lambda_0}$$

$$\frac{h^2}{2m \cdot \lambda_e^2} = \frac{h \cdot c}{\lambda_i} - \frac{h \cdot c}{\lambda_0}$$

$$\lambda_e = \sqrt{\frac{h}{2m \cdot c\left(\frac{1}{\lambda_i} - \frac{1}{\lambda_0}\right)}}$$

Atoms

Questions 293-293 / 1 selected / 0.3% practice weight / Consolidate

Question 293

Hydrogen atom from excited state comes to the ground by emitting a photon of wavelength λ. The value of principal quantum number ' n ' of the excited state will be :(R : Rydberg constant)

A. $\sqrt{\frac{\lambda R}{\lambda-1}}$

B. $\sqrt{\frac{\lambda R}{\lambda R-1}}$

C. $\sqrt{\frac{\lambda}{\lambda R-1}}$

D. $\sqrt{\frac{\lambda R^2}{\lambda R-1}}$

Correct answer: B

Source solution

$$\frac{1}{\lambda}=R\left(\frac{1}{1^2}-\frac{1}{n^2}\right)$$

Since the transition is from the excited state n to the ground state $(n=1)$,

$$\frac{1}{\lambda}=R\left(1-\frac{1}{n^2}\right)$$

$$\frac{1}{\lambda R}=1-\frac{1}{n^2}$$

$$\frac{1}{n^2}=1-\frac{1}{\lambda R}=\frac{\lambda R-1}{\lambda R}$$

$$n^2=\frac{\lambda R}{\lambda R-1}$$

$$\boxed{n = \sqrt{\frac{\lambda R}{\lambda R - 1}}}$$

Semiconductor Electronics: Materials, Devices and Simple Circuits

Questions 294-296 / 3 selected / 1.0% practice weight / Consolidate

Question 294

In the given circuit- the value of current $\mathbf{I_L}$ will be
mA .
(When $\mathbf{R_L = 1k\Omega}$)

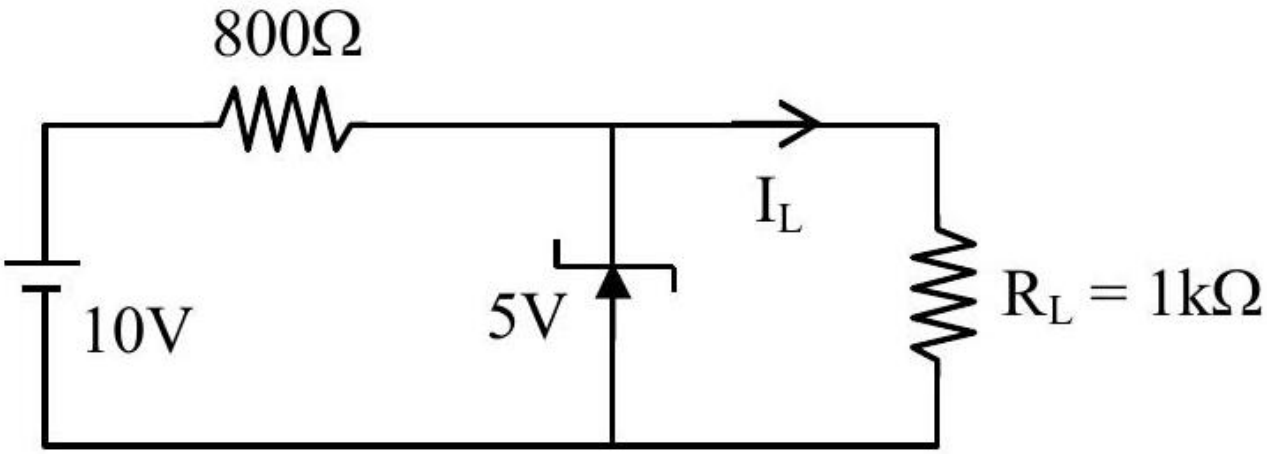

Numerical answer: _____

Enter the requested value or coefficient rounded to the nearest integer (0 decimal places).

Correct answer: 5

Source solution

$I_L = \frac{5}{1000} = 5\ \mathrm{mA}$

Question 295

Match List-I with List-II.

List-I	List-II
(a) Intrinsic semiconductor	(i) Fermi-level in the middle of valence and conduction band
(b) n-type semiconductor	(ii) Fermi-level near the conduction band
(c) p-type semiconductor	(iii) Fermi-level near the valence band
(d) Metals	(iv) Fermi-level inside the conduction band

Choose the correct answer from the options given below:

A. A-II, B-III, C-I, D-IV

B. A-I, B-II, C-III, D-IV

C. A-II, B-I, C-III, D-IV

D. A-III, B-I, C-II, D-IV

Correct answer: A

Source solution

Intrinsic semiconductor $\rightarrow$ Fermi level at the middle of the band gap

n-type semiconductor $\rightarrow$ Fermi level near the conduction band

p-type semiconductor $\rightarrow$ Fermi level near the valence band

Metals $\rightarrow$ Fermi level inside the conduction band

Question 296

The logic performed by the circuit shown in figure is equivalent to :

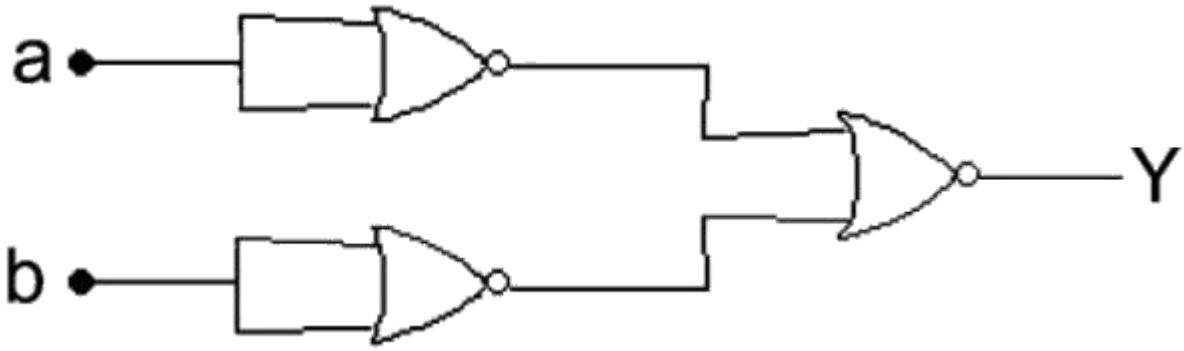

A. AND

B. NAND

C. OR

D. NOR

Correct answer: A

Source solution

$$Y = \overline{\overline{a} + \overline{b}}$$

$$= a \cdot b$$

The truth table for the given circuit is

a	b	Y
0	0	0
0	1	0
1	0	0
1	1	1

$$\therefore Y = a \cdot b$$

AND Gate

Communication Systems

Questions 297-300 / 4 selected / 1.3% practice weight / Historical appendix

Question 297

A carrier wave with amplitude of 250 V is amplitude modulated by a sinusoidal base band signal of amplitude 150 V. The ratio of minimum amplitude to maximum amplitude for the amplitude modulated wave is 50 : x, then value of x is ___

Numerical answer: _____

Enter the requested integer (0 decimal places).

Correct answer: 200

Source solution

$$A_{\max} = A_C + A_m = 250 + 150 = 400$$
$$A_{\min} = A_C - A_m = 250 - 150 = 100$$
$$\frac{A_{\min}}{A_{\max}} = \frac{100}{400} = \frac{1}{4} = \frac{5}{200}$$
$$x = 200$$

Question 298

A transmitting antenna has a height of 320 m and that of receiving antenna is 2000 m . The maximum distance between them for satisfactory communication in line of sight mode is ' d '. The value of ' $\boldsymbol{d}$ ' is km .

Numerical answer: _____

Enter the requested value (an integer; 0 decimal places). Use the units and scaling stated in the question.

Correct answer: 224

Source solution

$$d_m = \sqrt{2\,\mathrm{Rh}_T} + \sqrt{2\,\mathrm{Rh}_R}$$
$$\mathrm{d_m} = \left(\sqrt{2 \times 6400 \times 10^3 \times 320} + \sqrt{2 \times 6400 \times 10^3 \times 2000}\right)\mathrm{m}$$

$$\mathrm{d_m} = 224\ \mathrm{km}$$

Question 299

Match List-I with List-II.

List-I	List-II
(a) Attenuation	(i) Loss of strength of a signal while propagating through a medium
(b) Transducer	(ii) Converts one form of energy into another
(c) Demodulation	(iii) Process of retrieval of information from the carrier wave at receiver
(d) Repeater	(iv) Combination of a receiver and transmitter

Choose the correct answer from the options given below:

A. A-IV, B-III, C-I, D-II

B. A-I, B-II, C-III, D-IV

C. A-IV, B-III, C-II, D-I

D. A-II, B-III, C-IV, D-I

Correct answer: B

Source solution

$$\text{Attenuation} \rightarrow \text{Loss of strength of a signal} \rightarrow (i)$$

$$\text{Transducer} \rightarrow \text{Converts one form of energy into another} \rightarrow (ii)$$

$$\text{Demodulation} \rightarrow \text{Retrieval of information from the carrier wave} \rightarrow (iii)$$

$$\text{Repeater} \rightarrow \text{Combination of a receiver and transmitter} \rightarrow (iv)$$

Question 300

Match List I with List II:

List I	List II
A. Attenuation	I. Combination of a receiver and transmitter.
B. Transducer	II. process of retrieval of information from the carrier wave at receiver
C. Demodulation	III. converts one form of energy into another
D. Repeater	IV. Loss of strength of a signal while propogating through a medium.

Choose the correct answer from the options given below:

A. A-IV, B-III, C-I, D-II

B. A-I, B-II, C-III, D-IV

C. A-IV, B-III, C-II, D-I

D. A-II, B-III, C-IV, D-I

Correct answer: C

The source provides a brief answer only. A detailed worked solution is not available for this question.

Source solution

Theory
